Gas Discharge Tube (GDT) Data Sheet

Features

- Provide ultra-fast response to surge voltage from slow-rising surge of 100V/s to rapid-rising surge of 1KV/μs
- Stable breakdown voltage
- High insulation resistance
- Low capacitance (≤2pF)
- High holdover voltage
- Large absorbing transient current capability
- Micro-Gap Design
- Size: 6.0mm*8.5mm
- Storage and operating temperature: -40℃ ~ +85℃
- Meets MSL level 1, per J-STD-020
- Safety certification: E244458

Applications

- Repeaters, Modems
- Telephone Interface, Line cards
- Data communication equipment
- Line test equipment

Part Number Code

3 R □ □ □ □ □ — 6 — □ — □

Electrode Numbers
3R: 3 Electrodes

Electrical Characteristics
L：5KA
M：10KA

DC Spark-over Voltage

Lead Type
L：Lead
M: SMD

Dimensions
6: 6.0mm×8.5mm

Failsafe Option
Blank: Standard product
F: With failsafe mechanism

Packing Code
No suffix: Bulk
TR: Tape & Reel packing

Marking

B : BrightKing Logo
3RL090-6 : Device Marking Code
YXXX : Date Code

Dimensions

L Type

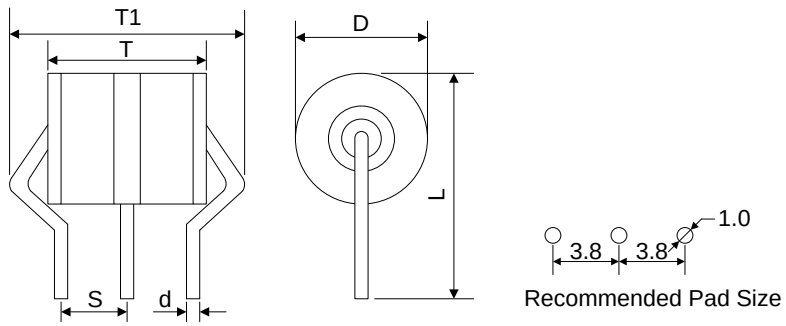

L-F Type

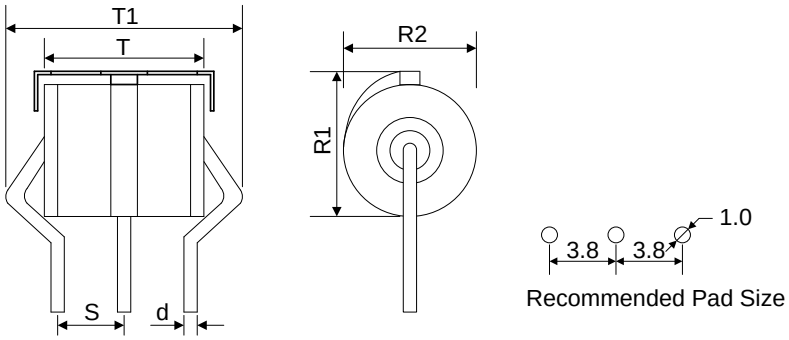

M Type

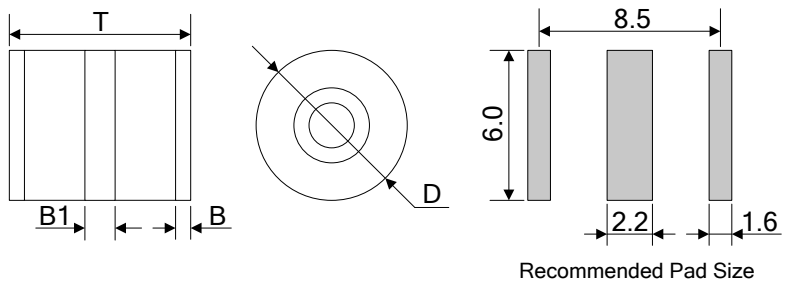

Symbol	Dimension (mm)	
	Spec.	Tolerance
D	6.0	+0.2, -0.5
T	8.5	±0.5
T1	15.0	Max.
L	16.0	Max.
S	3.8	±0.3
d	0.8	±0.1
R1	7.8	±0.4
R2	6.3	±0.3
D	6.0	±0.2
T	8.5	±0.5
B	1.0	±0.1
B1	1.5	±0.2

Electrical Characteristics

Part Number		DC Spark-over Voltage	Maximum Impulse Spark-over Voltage	Nominal Impulse Discharge Current	Alternating Discharge Current	Impulse Life	Minimum Insulation Resistance		Maximum Capacitance	Device Marking Code
		100V/s	1000V/μs	8/20μs 10times	50Hz,1sec	10/1000μs 100A	Test Voltage	(GΩ)	1MHz	
		(V)	(V)	(KA)	(A)	(times)	DC(V)		(pF)	
3RL075L-6	3RL075M-6	75±20%	750	5.0	5.0	200	25	1.0	2.0	3RL075-6
3RL090L-6	3RL090M-6	90±20%	750	5.0	5.0	200	50	1.0	2.0	3RL090-6
3RL150L-6	3RL150M-6	150±20%	800	5.0	5.0	200	100	1.0	2.0	3RL150-6
3RL230L-6	3RL230M-6	230±20%	800	5.0	5.0	200	100	1.0	2.0	3RL230-6
3RL250L-6	3RL250M-6	250±20%	800	5.0	5.0	200	100	1.0	2.0	3RL250-6
3RL300L-6	3RL300M-6	300±20%	900	5.0	5.0	200	100	1.0	2.0	3RL300-6
3RL350L-6	3RL350M-6	350±20%	900	5.0	5.0	200	100	1.0	2.0	3RL350-6
3RL470L-6	3RL470M-6	470±20%	950	5.0	5.0	200	250	1.0	2.0	3RL470-6
3RL600L-6	3RL600M-6	600±20%	1300	5.0	5.0	200	250	1.0	2.0	3RL600-6
3RM075L-6	3RM075M-6	75±20%	750	10	10	300	25	1.0	2.0	3RM075-6
3RM090L-6	3RM090M-6	90±20%	750	10	10	300	50	1.0	2.0	3RM090-6
3RM150L-6	3RM150M-6	150±20%	800	10	10	300	100	1.0	2.0	3RM150-6
3RM230L-6	3RM230M-6	230±20%	800	10	10	300	100	1.0	2.0	3RM230-6
3RM250L-6	3RM250M-6	250±20%	800	10	10	300	100	1.0	2.0	3RM250-6
3RM300L-6	3RM300M-6	300±20%	900	10	10	300	100	1.0	2.0	3RM300-6
3RM350L-6	3RM350M-6	350±20%	900	10	10	300	100	1.0	2.0	3RM350-6
3RM470L-6	3RM470M-6	470±20%	950	10	10	300	250	1.0	2.0	3RM470-6
3RM600L-6	3RM600M-6	600±20%	1300	10	10	300	250	1.0	2.0	3RM600-6

Electrical Ratings

Items	Test Condition/Description	Requirement
DC Spark-over Voltage	The voltage is measured with voltage ramp dv/dt=100V/s. Test is between each side electrode and center electrode.	To meet the specified value
Maximum Impulse Spark-over Voltage	The maximum impulse spark-over voltage is measured with voltage ramp dv/dt=1000V/μs. Test is between each side electrode and center electrode.	

Impulse Discharge Current	Maximum surge current that can be applied through center electrode with 8/20μs waveform, for 10 times with 3min interval time, which will be equally divided between each side electrode to center electrode, without causing the DC breakdown voltage to change more than 25% from its initial measured value. 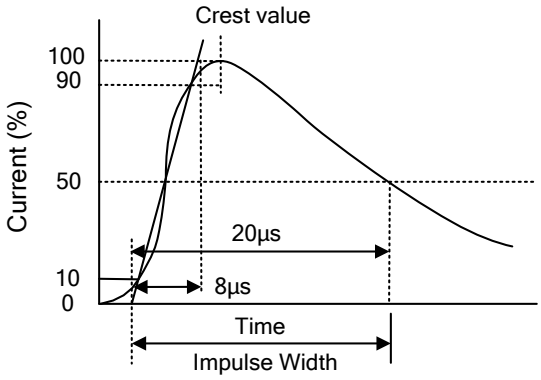	
Alternating Discharge Current	Rated RMS value of AC current at 50Hz, 1 sec. for 10 times with interval time 3 min. DC spark-over voltage shall not change more than ±25% from its initial value. Test is between each side electrode and center electrode. IR＞10^8 ohms (-20%, +30% for 70~90V).	
Insulation Resistance	The resistance of gas tube shall be measured between each side electrodes and center electrode.	
Capacitance	The capacitance of gas tube shall be measured between each side electrodes and center electrode. Test frequency: 1MHz	

Recommended Soldering Conditions

Wave Soldering

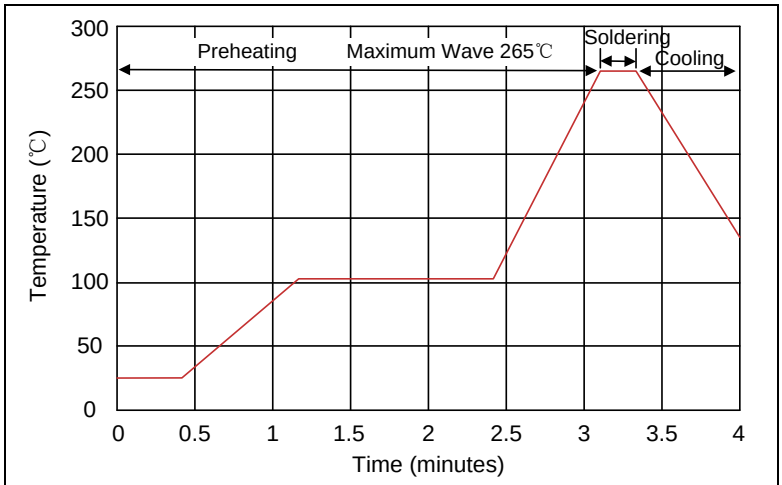

Item	Conditions
Peak Temperature	265℃
Dipping Time	10 seconds
Soldering	1 time

Reflow Soldering

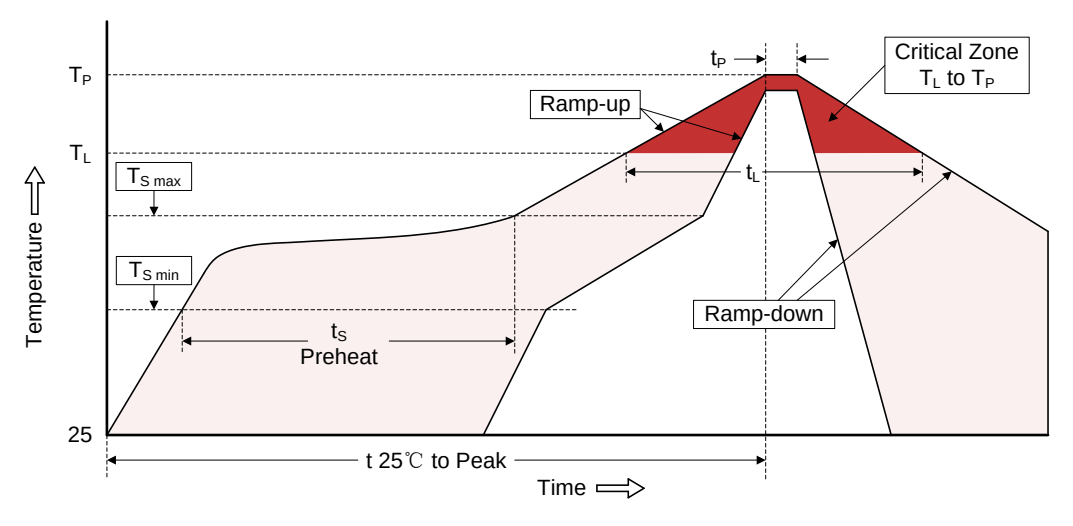

Profile Feature	Pb-Free Assembly
Average ramp-up rate (T_L to T_P)	3℃/second max.
Preheat -Temperature Min ($T_{S\,min}$) -Temperature Max ($T_{S\,max}$) -Time (min to max) (ts)	 150℃ 200℃ 60-180 seconds
$T_{S\,max}$ to T_L -Ramp-up Rate	 3℃/second max.
Time maintained above: -Temperature (T_L) -Time (t_L)	 217℃ 60-150 seconds
Peak Temperature (T_P)	260℃
Time within 5℃ of actual Peak Temperature (t_P)	20-40 seconds
Ramp-down Rate	6℃/second max.
Time 25℃ to Peak Temperature	8 minutes max.

Packaging

Axial Packing (Bulk)

Skin packing

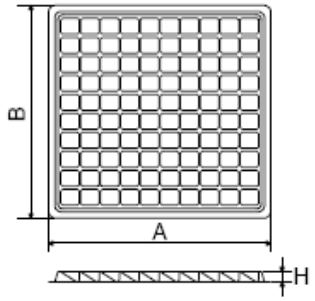

Symbol	Dimension (mm)	
	Spec.	Tolerance
A	217.0	±2.0
B	207.0	±2.0
H	10.3	±0.5
Quantity: 100pcs		

Inner box

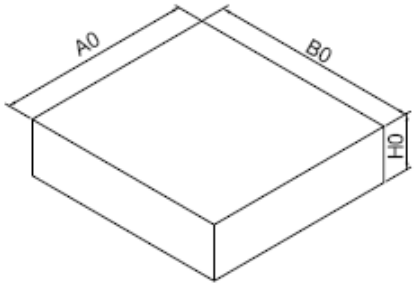

A0	225.0	±2.0
B0	210.0	±2.0
H0	60.0	±2.0
Quantity: 500pcs		

SMD Packing (Tape & Reel)

Tape

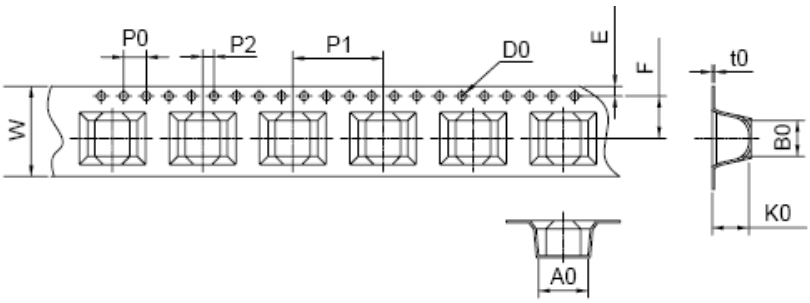

Symbol	Dimension (mm)	
	Spec.	Tolerance
W	16.00	±0.20
P0	4.00	±0.10
P1	16.00	±0.10
P2	2.00	±0.10
D0	1.55	±0.05
E	1.75	±0.10
F	7.50	±0.10
A0	8.80	±0.10
K0	6.20	±0.10
B0	6.35	±0.10
t0	0.50	±0.05

Reel

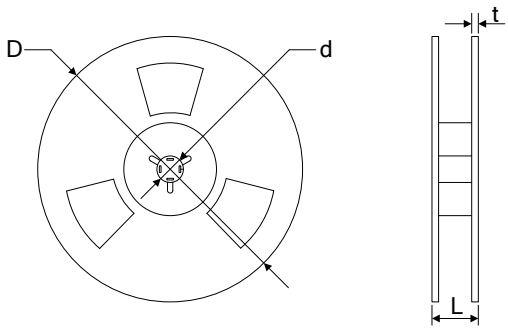

D	330.00	±2.00
d	13.00	±0.50
L	20.00	±2.00
t	2.00	±0.20
Quantity: 600pcs		

X-ON Electronics

Largest Supplier of Electrical and Electronic Components

Click to view similar products for brightking ***manufacturer:***

Other Similar products are found below :

1.5KE220A SMDJ33A SMDJ78A 3RM230L-8 LES08A05L05 SMDJ6.5CA-AT 5.0SMDJ17A 5.0SMDJ33CA 911KD14J 5KP12A 5KP120A 471KD25 2RM075M-8 112KD14 2RK3000M-8 5.0SMDJ100A 2RH2000M-8 820KD20J 30KPA30A 182KD20 SMDJ43A 5.0SMDJ12A SMDJ18CA-AT BK16-600-SZ BK12005002-M 1.5KE22A 5.0SMDJ130CA 5KP90CA 1.5SMC24A 15KPA30A 181KD20 101KD20 470KD20J 5KP40CA 15KPA75CA 4532-471-LF 15KPA30CA BK22002002-M SMDJ33CA-AT 5.0SMDJ78CA 3RL150M-5-S 15KPA24A SMDJ110CA SMDJ5.0CA-AT 30KPA45CA 15KPA58CA 15KPA33A 821KD25 P0900SC P0720SC