PART NAME	NEMA DIE CAST BOX WITH EMI/RFI SHIELDING	PART No.	ANS-3807 ANS-3807-B	REVISION DATE	8-22-13

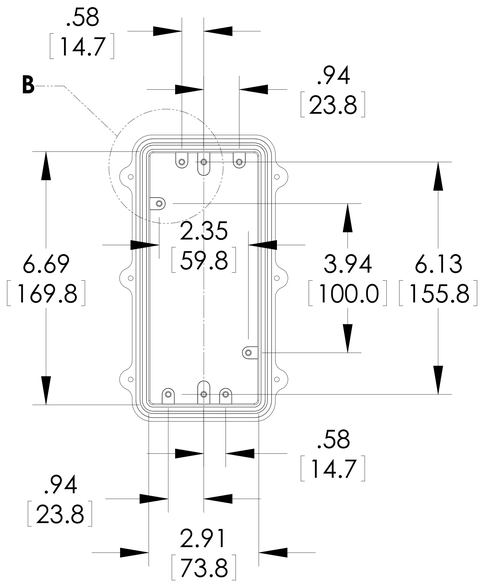

INSIDE BODY DETAILS

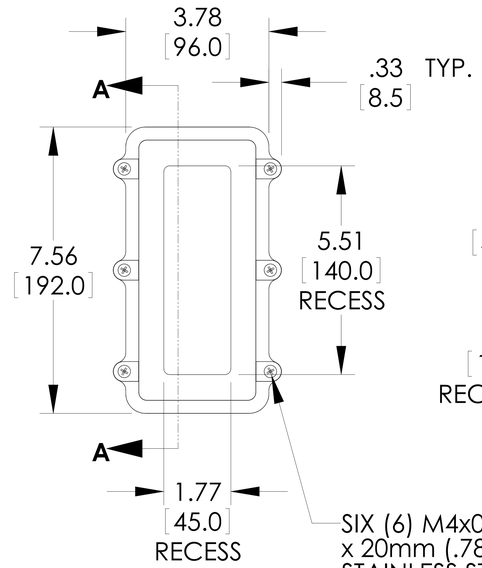

TOP VIEW

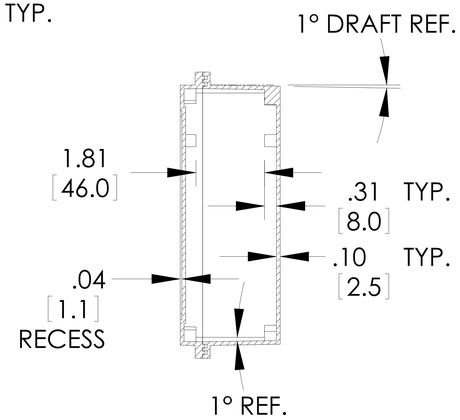

SECTION A-A

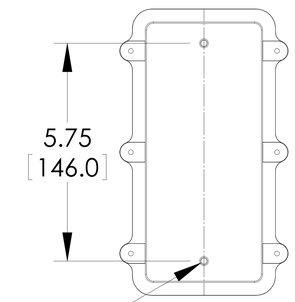

BOTTOM VIEW

∅.176 x .315[8.00] DEEP BLIND HOLE (2X)
[4.47]
{ACCEPTS M5 x 10mm (.394") LG.
SELF-TAPPING SCREWS (NOT SUPPLIED)}

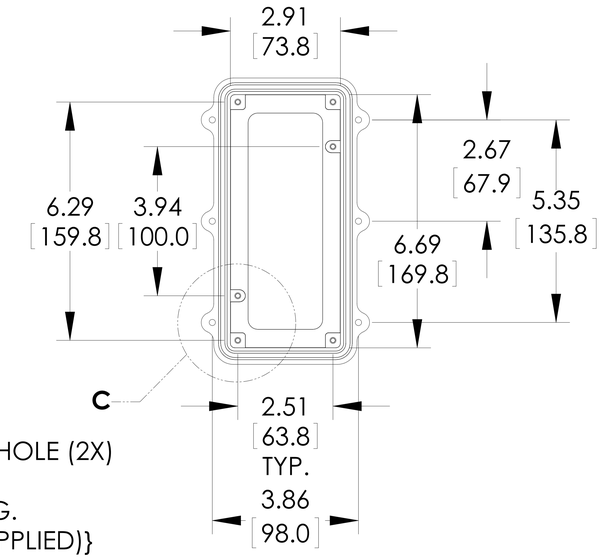

INSIDE COVER DETAILS

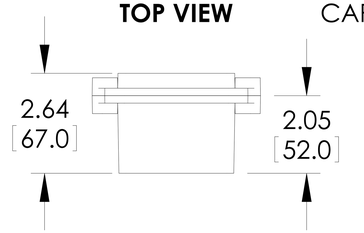

MEETS NEMA 1, 2, 4, 4X, 12, 13 AND IP67 RATINGS

MATERIAL - ALUMINUM ALLOY ADC-12

FINISH - NATURAL (NO SUFFIX PART NO.)
- SMOOTH BLACK (-B SUFFIX PART NO.)

TOLERANCES: ALL HOLE DIAMETERS ±.005[±.13]
ALL OTHER DIMENSIONS ±.02[±.4]

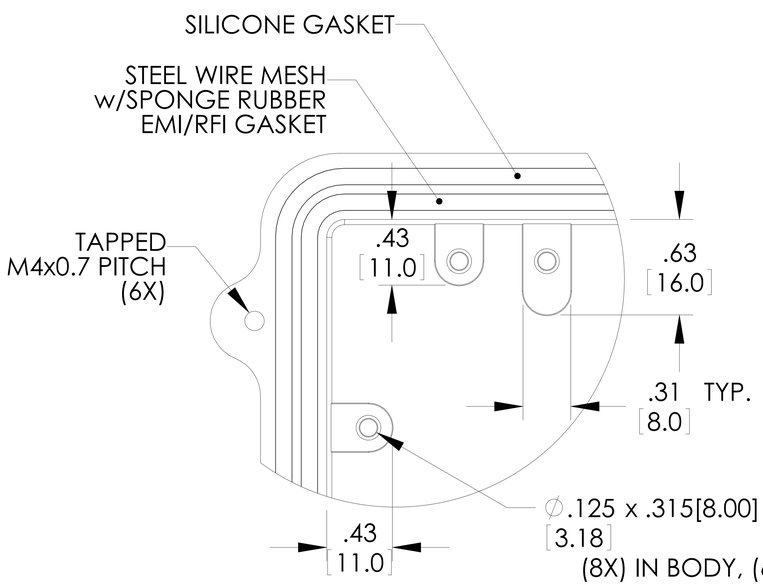

DETAIL B
SCALE 4 : 1

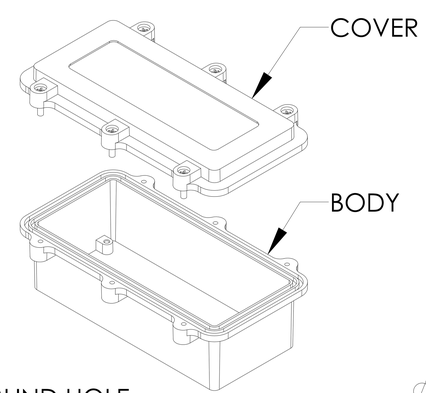

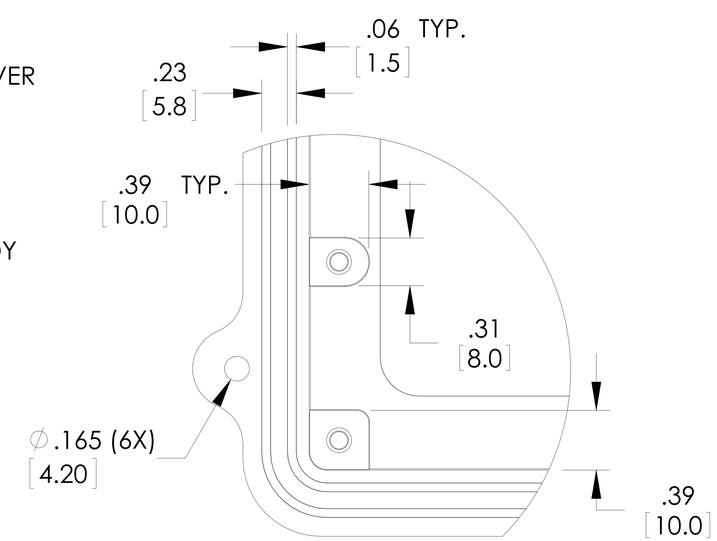

DETAIL C
SCALE 4 : 1

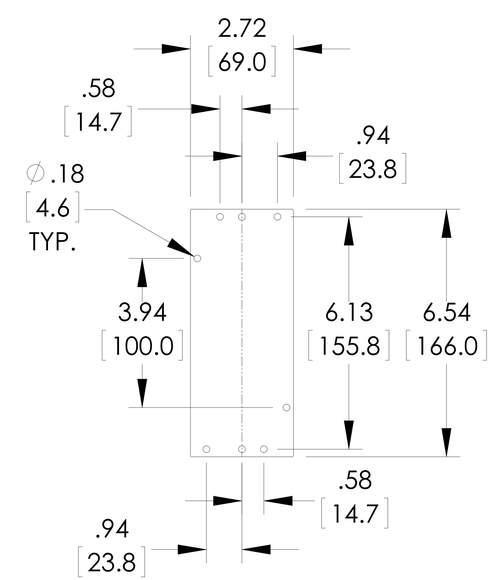

SUGGESTED PC BOARD OR
INTERNAL PANEL LAYOUT

X-ON Electronics

Largest Supplier of Electrical and Electronic Components

Click to view similar products for Electrical Enclosures ***category:***

Click to view products by Bud Industries ***manufacturer:***

Other Similar products are found below :

120-401 120-905 120-909 120-403 130-004 MR-25L+ 30-8739 PIP-11774SCREW 30-9715 30-9777-BU 105-905 110-902 110-901 A16N12BLP 110-406 110-401 110-404 120-405 34861601 106-009 106-505 105-405 111-005 127-909 106-502 130-503 127-455 9511150 9511017 9820011 NSYTDB5PL 137-455 130-001 105-904 120-404 137-005 130-505 127-406 AB 1,5.0 AB2.0 ABM.0 73345601 F-MP H-MP M-MP PAT 12040 2461000 9121230 79541301 19001001