| PART NAME | IP67 SERIES NEMA DIE CAST ALUMINUM BOX | PART No. | IPS-3919 | REVISION DATE | 1/21/2011 |
|---|---|---|---|---|---|

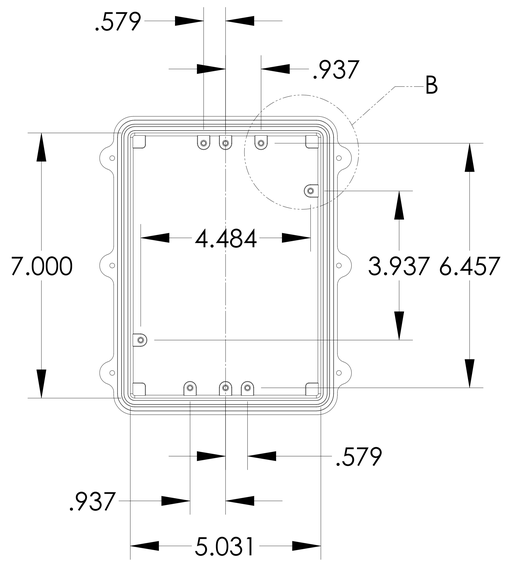


INSIDE BODY DETAILS

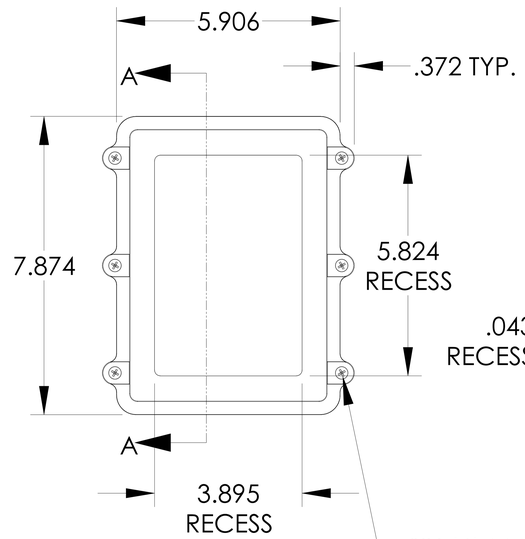


TOP VIEW

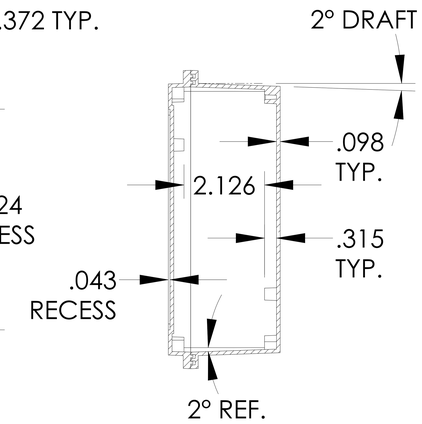


SECTION A-A

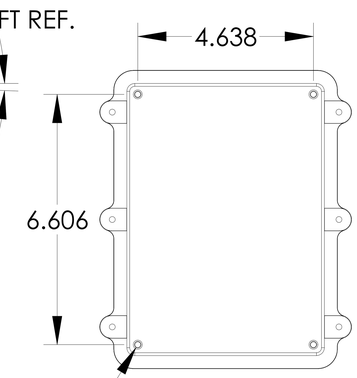


BOTTOM VIEW

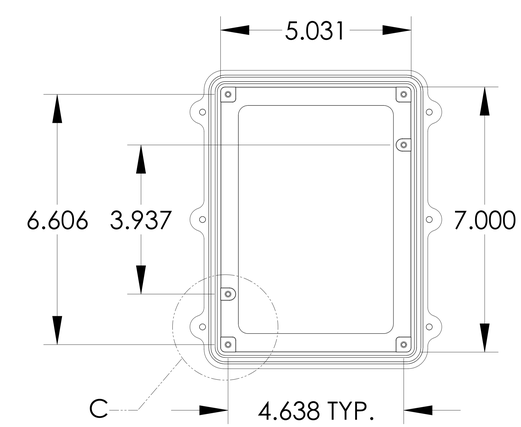


INSIDE COVER DETAILS

SIX (6) M4x0.7 PITCH x 20mm (.787") LG.
STAINLESS STEEL CAPTIVE SCREWS

∅.175 x .315 DEEP BLIND HOLE (4x)
{ACCEPTS M5 x 10mm (.394") LG.
SELF-TAPPING SCREWS (NOT SUPPLIED)}

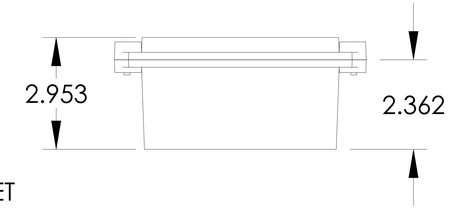


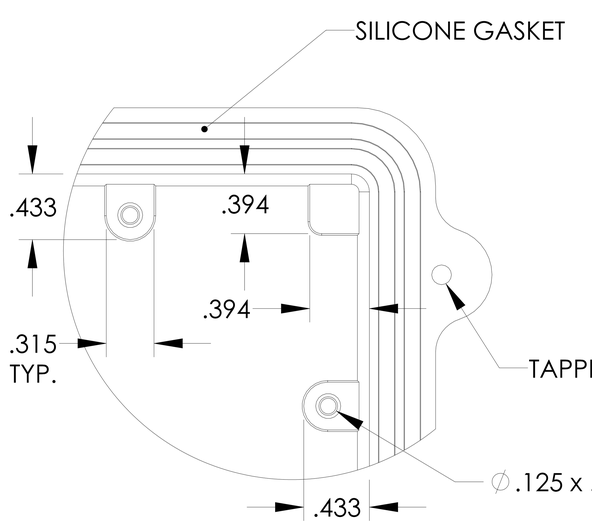


DETAIL B
SCALE 4 : 1

∅.125 x .315 DEEP BLIND HOLE
(8x) IN BODY
(6x) IN COVER
{ACCEPTS M3.5 x 6mm (.236") LG.
SELF-TAPPING SCREWS (NOT SUPPLIED)}

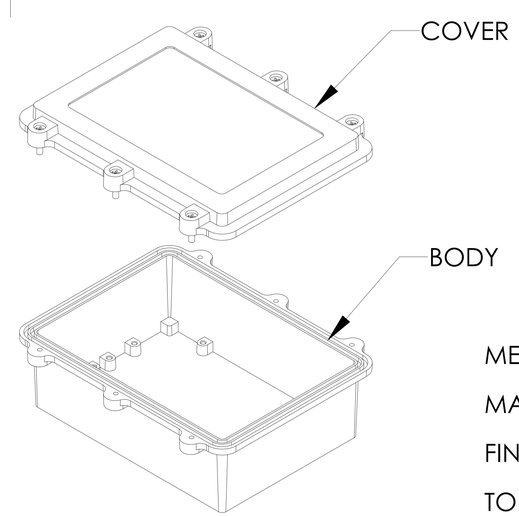


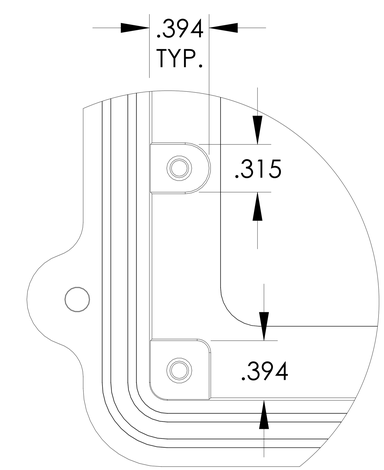


DETAIL C
SCALE 4 : 1

MEETS NEMA 1, 2, 4, 4X, 12, 13 AND IP67 RATINGS

MATERIAL - ALUMINUM ALLOY ADC-12

FINISH - NATURAL

TOLERANCES: ALL HOLE DIAMETERS ±.005
ALL OTHER DIMENSIONS ±.015

# X-ON Electronics

Largest Supplier of Electrical and Electronic Components

***Click to view similar products for*** Electrical Enclosures ***category:***

***Click to view products by*** Bud Industries ***manufacturer:***

Other Similar products are found below :

120-401 120-905 120-909 120-403 130-004 MR-25L+ 30-8739 PIP-11774SCREW 30-9715 30-9777-BU 105-905 110-902 110-901 A16N12BLP 110-406 110-401 110-404 120-405 34861601 106-009 106-505 105-405 111-005 127-909 106-502 130-503 127-455 9511150 9511017 9820011 NSYTDB5PL 137-455 130-001 105-904 120-404 137-005 130-505 127-406 AB 1,5.0 AB2.0 ABM.0 73345601 F-MP H-MP M-MP PAT 12040 2461000 9121230 79541301 19001001