PART NAME	NBF SERIES PLASTIC NEMA BOX	PART No.	NBF-32002 & NBF-32102 & NBF-32202 & NBF-32302 & NBF-32402	REVISION DATE	8/31/2010

MATERIAL	FLAMMABILITY RATING	CONTINUOUS OPERATING TEMP.
ABS	UL94-HB	-40˚C ~ +60˚C / -40˚F ~ 140˚F
CLEAR PC	UL94-V0 UV STABLILIZED	-40˚C ~ +130˚C / -40˚F ~ 266˚F
ABS / PC BLEND	UL94-5VA	-40˚C ~ +85˚C / -40˚F ~ 185˚F
PBT / PC BLEND	UL94-5VA + UV (f1)	-40˚C ~ +75˚C / -40˚F ~ 167˚F

FINISH:
BODY_____ LIGHT GRAY
COVER_____ LIGHT GRAY OR CLEAR
LATCHES & HINGES_____ PLASTIC
WALL MOUNTING BRACKETS__ STAINLESS STEEL
& HARDWARE

BODY

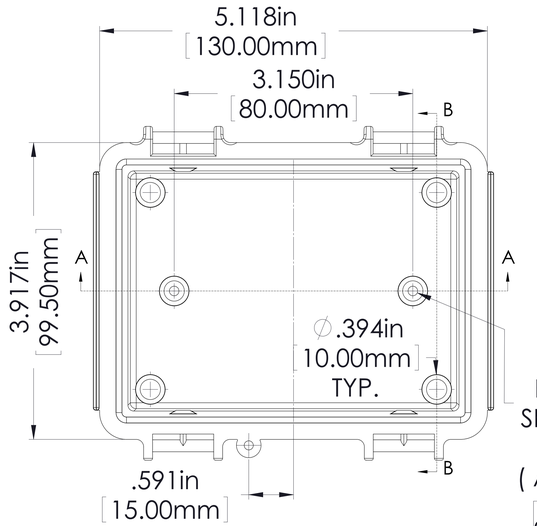

∅.126in
[3.20mm]
FOR M4 x 10mm LG.
SELF-TAPPING SCREWS
2 PLCS.
(ABS VERSIONS ONLY)

M4 THREADED INSERTS
ON ALL OTHER VERSIONS
USE M4 x 8mm LG.
MACHINE SCREWS.
2 PLCS.

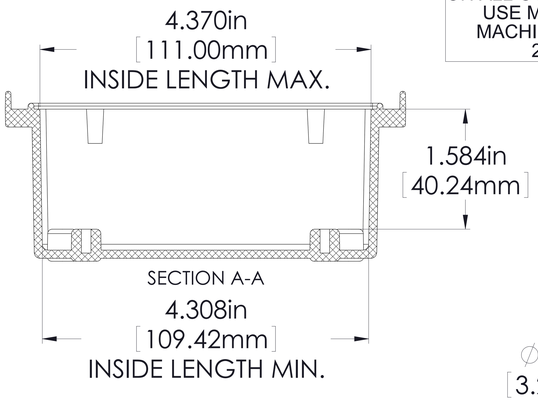

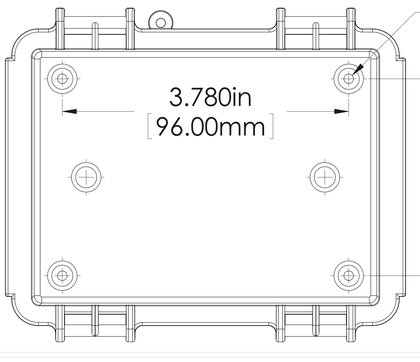

∅.126in
[3.20mm]
FOR M4 x 10mm LG.
SELF-TAPPING SCREWS
4 PLCS.

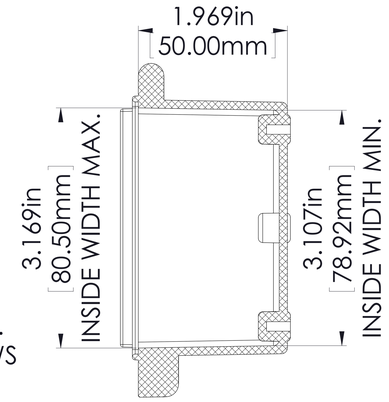

SECTION B-B

ASSEMBLY

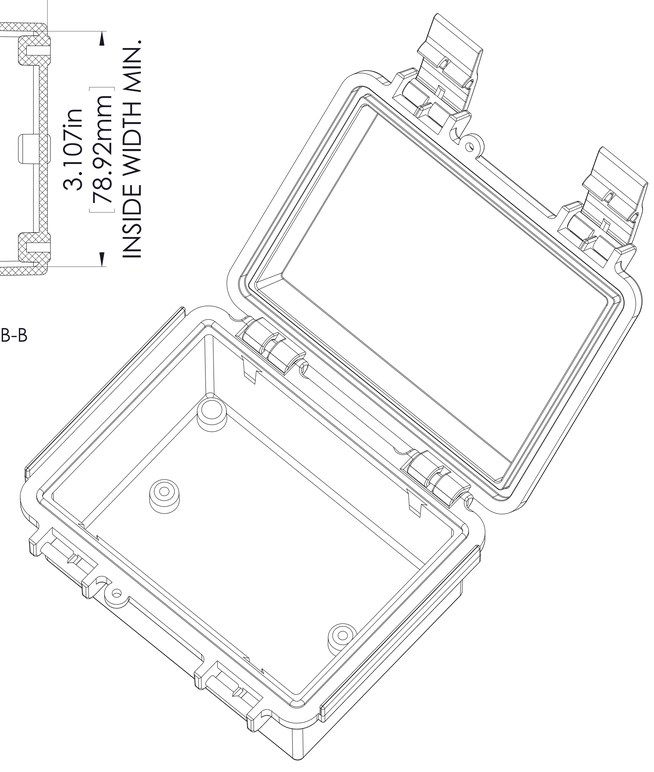

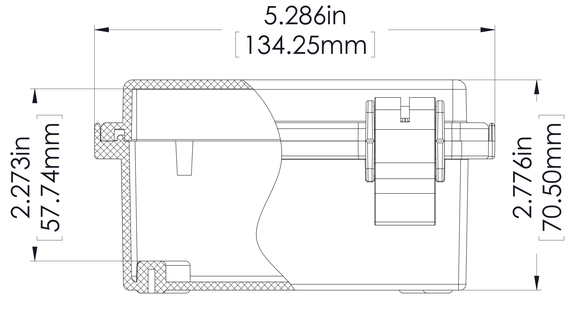

COVER

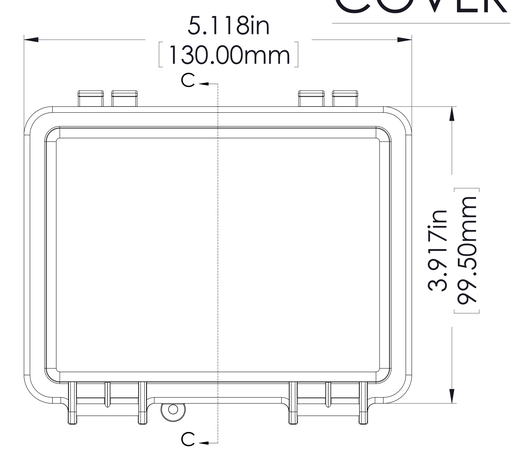

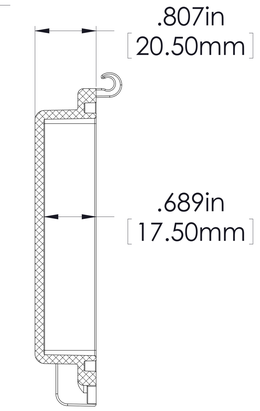

SECTION C-C

NOTES:

1) UNIT COMES COMPLETE WITH (4) WALL MOUNTING BRACKETS & (4) M4 x 10mm LG. SELF-TAPPING SCREWS. (NOT SHOWN)

2) BOXES DESIGNED TO MEET FOLLOWING STANDARDS: NEMA 1,2,4,4X AND IEC529-IP65 REQUIREMENTS.

TOLERANCES:

ALL DIMENSIONS HAVE
±0.039in. [±1mm] TOLERANCE
UNLESS OTHERWISE SPECIFIED.

PART NO.	MATERIAL		USE
	BODY	COVER	
NBF-32002	ABS	ABS	INDOOR
NBF-32102	ABS / PC	ABS / PC	INDOOR
NBF-32202	ABS / PC	CLEAR PC	INDOOR
NBF-32302	PBT / PC	PBT / PC	OUTDOOR
NBF-32402	PBT / PC	CLEAR PC	OUTDOOR

X-ON Electronics

Largest Supplier of Electrical and Electronic Components

Click to view similar products for Electrical Enclosures ***category:***

Click to view products by Bud Industries ***manufacturer:***

Other Similar products are found below :

120-401 120-905 120-909 120-403 130-004 MR-25L+ 30-8739 PIP-11774SCREW 30-9715 30-9777-BU 105-905 110-902 110-901 A16N12BLP 110-406 110-401 110-404 120-405 34861601 106-009 106-505 105-405 111-005 127-909 106-502 130-503 127-455 9511150 9511017 9820011 NSYTDB5PL 137-455 130-001 105-904 120-404 137-005 130-505 127-406 AB 1,5.0 AB2.0 ABM.0 73345601 F-MP H-MP M-MP PAT 12040 2461000 9121230 79541301 19001001