CAD FILE:

Poles	Dimensions(mm)		Poles	Dimensions(mm)	
	A	B		A	B
02	2.00	6.00	08	14.00	18.00
03	4.00	8.00	09	16.00	20.00
04	6.00	10.00	10	18.00	22.00
05	8.00	12.00	11	22.00	24.00
06	10.00	14.00	12	24.00	26.00
07	12.00	16.00	13	26.00	28.00

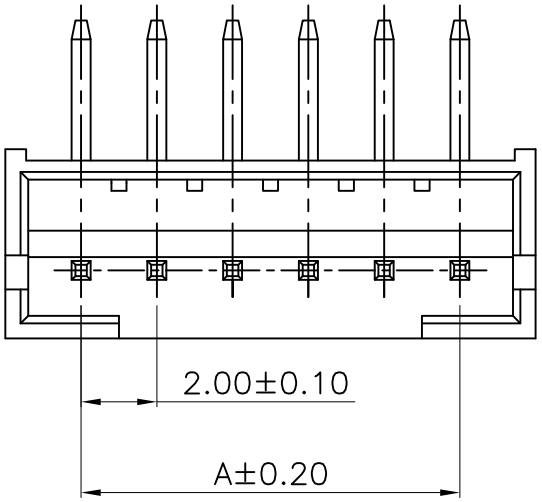

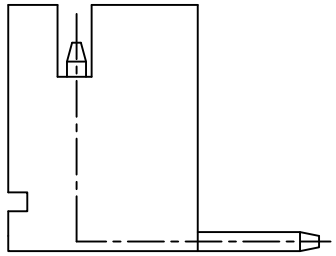

TYPE2

技术指标:

1. 塑件表面应光洁、无毛边、无明显收缩、缺陷、裂纹等现象.
2. 温度范围：-25° C～85° C.
3. 额定电压：50V，AC,DC.
4. 接触电阻：≤0.02Ω.
5. 绝缘电阻:≥100MΩ

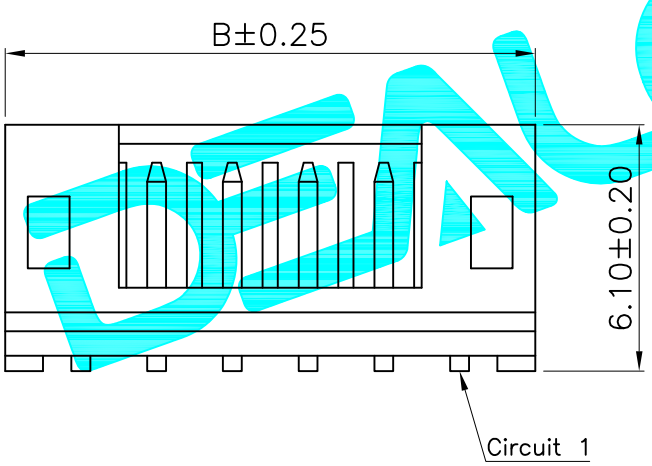

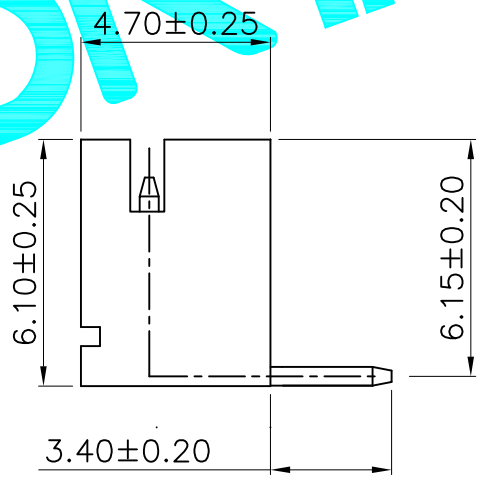

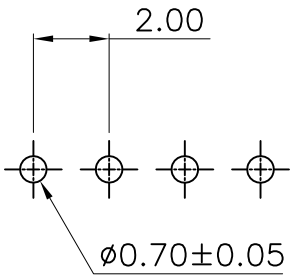

P.C.B LAYOUT

———	A	———	NEW	———	———	———
ECN NO.	REV.	DATE.	DESCRIPTION.	CHANGE.	CHECK.	APPRO.

APPROVALS		DATE	DEALON德艺隆® ELECTRONICS CO.,LTD		
DRAWN	G.M.Chen	2015/7/17			
CHECKED			TITLE:	2.0 Pitch 弯插	
APPROVALS			PART NO.	PH-XXAW	
TOLERANCES ARE	30~以上 ±0.30 / 10~30 ±0.20 / 5~10 ±0.15 / ~ 5 ±0.10	ANGLE ±2°	UNIT: mm	SCALE: 1:1	SHEET 1 OF 1
			DRAWING NO.	———	PROJ: ◎ ⊏

X-ON Electronics

Largest Supplier of Electrical and Electronic Components

Click to view similar products for Headers & Wire Housings ***category:***

Click to view products by DEALON ***manufacturer:***

Other Similar products are found below :

57102-F02-18ULF 58102-G61-06LF 582553-1 009176003701906 01.001.5753.1 0050291907 02.125.8002.8 609-3404 61062-3 CSU011177004 622-0430 622-3653LF 63453-116 636-1030 636-1427 636-3427 636-4007 641938-9 644827-2 65495-038 65692-001LF 65781-018 65781-047 65817-010LF 65817-015LF 66207-023LF 67095-007LF 67601157 68631-112 68645-018 699319-000 M90C108951C 70.362.1628.0 70-4210 70-4226B 70-4853B 707-5028 71.350.2428.0 71961-016LF 733-134 733-162 754199-000 760-3052 80.063.4001.1 800-90-001-10-001000 800-90-010-10-002000 801-43-002-10-013000 801-43-006-10-002000 803-41-018-10-001000 803-43-024-10-001000