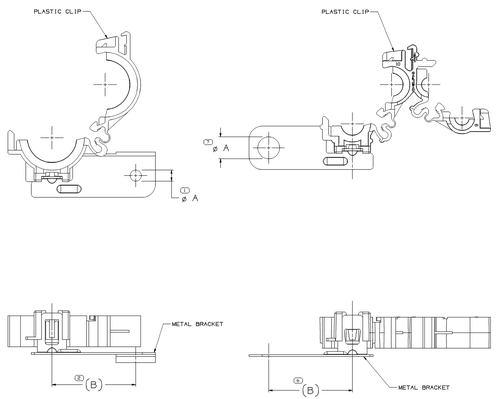

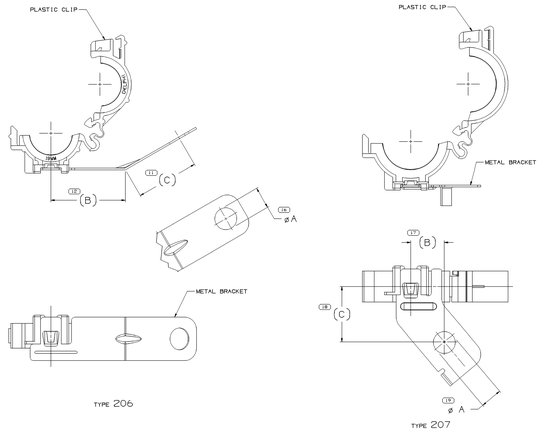

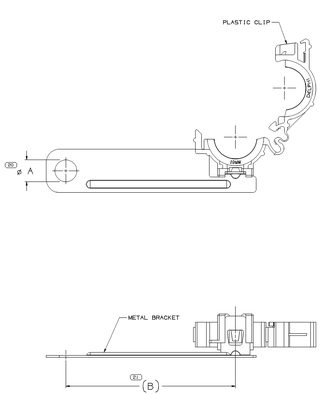

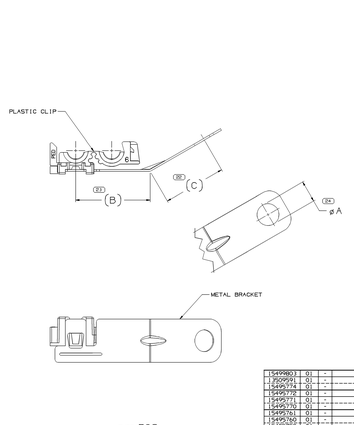

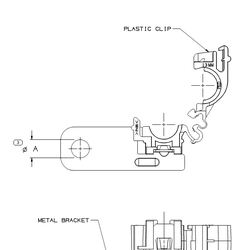

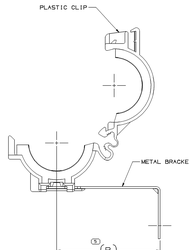

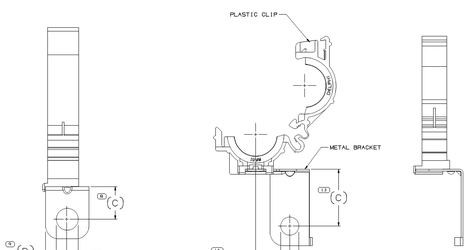

SYMBOL DEFINITION		MISSING SYMBOLS
A DIMENSION WITHOUT AN INSPECTION REPORT SYMBOL DOES NOT REQUIRE INSPECTION. IT MAY BE CONTROLLED ON THE INDIVIDUAL COMPONENT DRAWING.	TOTAL NO OF INSPECTIONS REQUIRED: 24	NO MISSING SYMBOL NUMBER
	LAST NO. USED: 24	

REVISION HISTORY											
	DWG STATUS										
DATE	STA	REV	PLOT	CAR	ZONE				AUTH	DR	DP/SUP
14AUG07	R	06	-	-		CLEANED REV COLUMN; 1547270?2 - RELEASED, UPDATED PDM ATTRIBUTES			231XXX	SS/SS	FR/
14JAN08	R	07	-	-		1547?4XX, 1547?9?1 - RELEASED			222XJW	AJH/SAF	FR
19SEP08	R	08	-	-		1547275?2 - UPDATED PDM ATTRIBUTES AND REVISION CLAX AND X1			230?9W	BRB/BRB	FR/
21SEP08	R	09	-	-		1547275?2 - UPDATED PDM ATTRIBUTES			232?5D	BRB/BRB	FR/
25AUG11	R	10	-	-		1520?0?08 & 1521?12?5 - REVISED NOTE 7 & REVISED PROCESS NOTES CALL OUT INFORMATION 1?1?3W & 1?5?6?2D- REVISED NOTE 6			245L3?D	RCH/RCH	FR/
10SEP13	R	11	-	-		1520?9?2B & 1520?9?3A - ADDED NOTE 9 & REVISED PROCESS NOTES CALL OUT INFORMATION			245B9L	RCH/RCH	FR/
08DEC13	R	12	-	-		1520?9?9A, 2191?5?0B & 2910?5?7 - REVISED METAL BRACKETS BUT INFORMATION			246H4L	RCH/RCH	FR/
26JAN14	R	13	-	-		1520?9?1B & 1520?9?1A - REVISED METAL BRACKETS & DIMENSIONS			251212	JRB/KV	SAH
14JAN14	R	14	-	-		1521?61B1, 1504?50?, 1547?0?0, 1520?39?, 1521?46?2, 1541?0?0, 1517?0?0, 1521?0?0, 1547?2?0?, 1547?44?? - OBSOLETE AND ADDED NOTE 1			253207	ISM	JAH/SAH
25AUG14	R	15	-	-		1549?080 - RELEASED			257?05	JTZ	AJR/MJ
25AUG14	R	16	-	-		1549?88?2 - RELEASED			257?47	JTZ	AJR/JF
04SEP14	R	17	-	-		ADDED PARTS 1549?17?1-1549?1?2?, 1549?17?3-1549?1?2?, 1549?19?1-1549?1?3?,1549?17?0-1549?1?2 AND 1549?174 - RELEASED			257B00	RH	RH	KD
08OCT14	R	18	-	-		ADDED PART 1?0?0?0? - RELEASED			260000	RH	RH	KD
20OCT14	R	19	-	-		1549?8?3 - RELEASED			260?9B	MJH	JAM	TP
09NOV14	R	20	-	-		1549?7?0 - ADDED TO CUSTOMER PART DRAWING			260A1?J	JTZ	TPV	TP
24NOV14	R	21	-	-		1521?07?1, 1504?79?, 1504?5?4, 1520?34?, 1520?44?0, 1504?0?0, 1520?0?0, 1504?0?1, 1520?0?1, 1517?0?0, 1521?0?0, 1547?2?0?, 1547?44?? - OBSOLETE AND ADDED NOTE 1			261B?0	KJD	PR/PDP	
25OCT15	R	22	-	-		1?0406J0 - OBSOLETE			27?629	ECB	AJR/PDP	

PART NO	REV	N/P	STATUS	TYPE	PLASTIC CLIP	METAL BRACKET	PROCESS NOTES	CDT (MM)	MOUNTING BOLT	ø A±.m	(B)	(C)	(D)
1549?8?3	01	-		202	1201396?4	1547?650	7	2?2	M10	10.6	50	15.75	-
1549?91	01	-		201	1212838?5	1547?649	-	15	MB	8.8	40.5	-	-
1549?074	01	-		201	1204?848	1549?101	-	1.3	M6	6.5	50	31.75	-
1549?72	01	-		208	1204?848	1547?669	-	19	M10	10.6	82.06	-	-
1549?71	01	-		202	1201396?4	1547?668	7	2?2	MB	8.8	50	15.75	-
1549?76	01	-		202	1203417?5	1547?667	-	1.3	M6	6.5	50	15.75	-
1549?61	01	-		201	1530667	1547?664	7	10	M10	10.6	40.5	-	-
1549?60	01	-		201	1204?848	1547?664	-	19	M10	10.6	40.5	-	-
1549?69	01	-		201	1203417?5	1547?664	-	1.3	M10	10.6	40.5	-	-
1549?58	01	-		201	1201395?	1547?664	7	2?5	MB	10.6	40.5	-	-
1549?56	01	-		202	1530667	1547?660	7	10	M10	10.6	29.2	15.9	-
1549?55	01	-		202	1204?848	1547?660	-	19	M10	10.6	29.2	15.9	-
1549?54	01	-		202	1203417?5	1547?660	7	1.3	M10	10.6	29.2	15.9	-
1549?53	01	-		202	1201396?4	1547?660	7	2?2	M10	10.6	29.2	15.9	-
1549?52	01	-		202	1203417?5	1547?650	7	1.3	M10	10.6	50	15.75	-
1549?21	01	-		202	1204?848	1547?650	-	19	M10	10.6	50	15.75	-
1549?70	01	-		202	1201396?4	1547?650	-	2?2	M10	10.6	50	15.75	-
1549?18	01	-		201	1201395?	1547?649	-	2?5	MB	8.8	40.5	-	-
1549?17	01	-		201	1212838?5	1547?649	-	15	MB	8.8	40.5	-	-
1549?15	01	-		201	1203417?5	1547?649	-	1.3	M6	6.5	40.5	-	-
1549?15	01	-		201	1201395?	1547?649	7	2?5	MB	8.8	40.5	-	-
1549?80	01	-		208	1201964	1549?89?	7	2?2	M6	6.5	82.06	-	-
1549?080	01	-		209	2092134	2092569	-	6	M10	10.6	21.75	30	-
1549?401	01	AA	OBSOLETE	201	2132803	2034187	-	30	MB	8.8	40.5	-	-
1549?469	01	AA	OBSOLETE	202	1201964	1530512	8	2?2	M6	6.5	50	15.75	-
1427252	01	AC	OBSOLETE	202	1204?848	1531739?	8	19	MB	8.8	50	15.75	-
1528230	A3	-	OBSOLETE	202	1530667	1212933	6	10	M10	10.6	29.2	15.9	-
1517?60	A3	-	OBSOLETE	208	1204?848	1517?61	-	19	M10	10.6	82.06	-	-
1517?9A	A5	-	OBSOLETE	202	1201964	1531739?	8	2?2	MB	8.8	50	15.75	-
1517?7?	A3	-	OBSOLETE	201	1530667	1530637	8	10	M10	10.6	40.5	-	-
1505?94	A3	-	OBSOLETE	202	1203417?5	1505?12	8	1.3	M6	6.5	50	15.75	-
1504?40	A3	-	OBSOLETE	201	1203417?5	1530637	8	1.3	M10	10.6	40.5	-	-
1219?79	A2	-	OBSOLETE	201	1204?848	2034187	-	19	MB	8.8	40.5	-	-
1219?58	A2	AA	OBSOLETE	202	1201964	1212?7?	6	2?2	M10	10.6	50	15.75	-
1219?58	A2	-	OBSOLETE	202	1204?848	1212933	6	19	M10	10.6	29.2	15.9	-
1219?24	A2	-	OBSOLETE	201	1204?848	2034187	-	19	MB	8.8	40.5	31.75	-
1211?00	C2	-	OBSOLETE	207	1201395?	1214?01	-	2?5	MB	8.8	20	20	-
1212073	A3	-	OBSOLETE	202	1203417?5	1212933	6	1.3	M10	10.6	29.2	15.9	-
1212447?	A2	-	OBSOLETE	201	1201395?	1224?7B	-	2?5	MB	8.8	50	8.3	6
1212024	A3	-	OBSOLETE	202	1201964	1212933	6	2?2	M10	10.6	29.2	15.9	-
1212125	C2	-	OBSOLETE	206	1201395?	2092569	-	2?5	MB	8.8	25.75	45	-
1210357	D3	AA	OBSOLETE	202	1204?848	1549?73	-	19	MB	6.5	50	31.75	-
2092708	G2	-		206	1204?848	2092559	-	19	M10	10.6	25.75	35	-
2089928	G2	AB	OBSOLETE	201	1201395?	1547?74?	6.9	2?5	MB	8.8	40.5	-	-
2089?79	G2	AB	OBSOLETE	202	1201395?	1547?79?	6	2?5	MB	8.8	50	15.75	-
2089?75	A2	-	OBSOLETE	205	1205240C	2054510	6.10	M10	M10	10.6	40.5	-	-
2089?4	A2	AB	OBSOLETE	201	1203417?5	1547?74?	6.9	1.3	MB	8.8	40.5	-	-
1206447?	A2	-	OBSOLETE	201	1204?848	2054510	-	19	M10	10.6	40.5	-	-
1206905	A2	-	OBSOLETE	202	1203417?5	2092637	-	1.3	M10	10.6	50	15.75	-
1206?82	A2	-	OBSOLETE	202	1204?848	2092637	-	19	M10	10.6	50	15.75	-
1206?8A	A2	-	OBSOLETE	201	1203417?5	2054510	-	1.3	M10	10.6	40.5	-	-
1205?46	A2	-	OBSOLETE	201	1201964	1205?51	-	2?2	M6	6.5	40.5	-	-
1204?0?	A2	-	OBSOLETE	202	1201964	1205?51	-	2?2	M6	6.5	50	15.75	-
1204805	A1	-	OBSOLETE	202	1201964	2054?49	-	2?2	M6	6.5	50	15.75	-
1247?95	B2	-	OBSOLETE	201	1201395?	2047?54	-	2?5	MB	6.5	50	15.75	-
1245?02	A2	-	OBSOLETE	201	1203417?5	2054510	-	1.3	M10	10.6	40.5	-	-
1245?50	A4	-	OBSOLETE	201	1201395?	2045?51	-	2?5	MB	6.5	40.5	-	-
1245?89	A1	-	OBSOLETE	201	1203417?5	2054510	-	1.3	M10	10.6	40.5	-	-
1240860	A1	-	OBSOLETE	203	1204?848	2040859	-	19	MB	8.8	16.5	27.5	-
1240?99	A3	-	OBSOLETE	201	1201395?	2040?87	-	2?5	MB	8.8	40.5	-	-
1240?8B	B2	-	OBSOLETE	202	1201395?	2040?37	-	2?5	M10	10.6	50	15.75	-
1234186	A2	-	OBSOLETE	202	1201964	2034187	-	2?5	MB	8.8	40.5	-	-
1234479	A1	-	OBSOLETE	201	1203417?5	2034187	-	1.3	MB	8.8	40.5	-	-

NOTES

1. UNLESS OTHERWISE SPECIFIED AND/OR INDICATED: DIMENSIONS ARE TO FACE OF VIEW SHOWN AND AUTOMATICALLY ROUNDED BY COMPUTER FOR INSPECTION STEP WITH MODEL. DIMENSIONS NOT SHOWN ARE FOR ALL STAGE MODELING PURPOSES NOT SHOWN ARE FOR BUILD, SEE MATH MODEL FOR PRECISE TOOL PATH DATA.
2. PROCESS OPERATIONS TO BE PERFORMED IN SEQUENCE SHOWN IN GRAPH.
3. THE PROCESS NOTES SHOWN BELOW ALSO APPLY TO THE METAL BRACKET TAXI DWG NO. 12034026
4. OBSOLETE PART(S) CONTAIN A HEXAVALENT CHROME COATING. DO NOT USE THIS PART ON NEW APPLICATIONS. HEXAVALENT CHROME IS A BANNED SUBSTANCE. IF THIS PART IS REQUIRED FOR CURRENT OR FUTURE BUSINESS OR FOR SERVICE REQUIREMENTS, CONTACT THE PRODUCT LINE ENGINEER OR MATERIALS ENGINEERING TO DETAIL THE PROCESS TO REMOVE HEXAVALENT CHROME. USE THIS INVENTORY OR THIS PART MAY BE USED UNTIL JULY 1, 2007 FOR SERVICE REQUIREMENTS.

METAL BRACKET
PROCESS NOTES

1. ZINC PLATE AND GOLD CHROMATE PER GM-4342 CODE 10D24.
2. HEAT TREAT PER POS 1251 E TO ROCKWELL "15N" B3-B6.
3. ZINC PLATE AND CLEAR CHROMATE PER GM-4342-M CODE 10D24.
4. TIN PLATE PER GM-4253-M CODE 20
5. PHOSPHATE/ORGANIC/OIL TYPE COATING PER GM-6174-M BLACK.
6. ZINC-ALUMINUM/INORGANIC TYPE PLATING PER GM6173-M BLACK.
7. MATERIAL IS PRE-PLATED D-85 BLACK PER MATERIAL SPECIFICATION 1?1?3W & 1?5?6?2D AND MUST PASS 96 HOURS NEUTRAL SALT SPRAY WITH NO RED RUST ON ANY SIGNIFICANT SURFACE.
8. PLATE TO .0003 MIN ZINC WITH BLACK CHROMATE, THEN 2 COATS LOW CURE BLACK ORGANIC TOPCOAT. FINISH MUST WITHSTAND 400 HRS MINIMUM TO RED RUST IN NEUTRAL SALT FOG, EXCEPT FOR SHARP EDGES.
9. PLATING REQUIREMENTS TO WITHSTAND 168 HOURS MINIMUM TO RED RUST IN NEUTRAL SALT FOG, EXCEPT FOR SHARP EDGES.

DRAFTING	PART DRAWING
STYLE	
SCALE 1X1	SHEET SIZE
UNLESS OTHERWISE SPECIFIED THIS DRAWING IS TO REPRESENT ACCURATE TOOLING DATA. THE PART MUST BE PRODUCED WITHOUT ALTERATION TO THE DRAWING. ALL DIMENSIONS ARE TO BE ACHIEVED AFTER FINISHING. ALL PLATING OR PAINT TO BE APPLIED AFTER FINISHING. ALL DIMENSIONS TO BE ACHIEVED AFTER PLATING OR PAINT. ALL DIMENSIONS TO BE ACHIEVED AFTER HEAT TREATMENT. ALL DIMENSIONS TO BE ACHIEVED AFTER FORMING. ALL DIMENSIONS ARE IN MILLIMETERS	
REFERENCE	
DELPHI	SUBCONTRACTOR OF CONTROL AND VEHICLE SAFETY FOR DELPHI. (DAYTON)
SIZE CRD	
DELPHI PART NUMBER	TAXI ASM MOUN CLIP CDT BRACKET
DELPHI PART NUMBER	12034064
SIZE SCALE SHEET NO. OF SHEET	A1x4 2:1 1 OF 21 2 OF
REV	R 22 -

CAUTION: PROCESS SENSITIVE DIMENSION

DIMENSION INCLUDES 1/2 OF TOLERANCE. REFERENCE DIMENSIONS ARE NOT TO BE INSPECTED.

.XX ±0.25	.XXX ±0.127	.XXXX ±0.0127	ANGLES ±0°30'
.X ±0.5	.XX ±0.25	.XXX ±0.127	ANGLES ±0°30'
.XXXXX ±0.0127			

THIRD ANGLE PROJECTION

CD-ROM SO-ACT SO-ACT

UNIT: MM

DELPHI

DELPHI PACKARD ELECTRIC SYSTEMS
WARREN, OH

		DATE
DR		
APPR	J. GOLLAGHER	16FEB05
APPR 2	J. HESTON	16FEB05
APPR 3	W. WHEELER	16FEB05
APPR		
APPR		

SUBCONTRACTOR OF CONTROL AND VEHICLE SAFETY FOR DELPHI. (DAYTON)

SIZE CRD

DELPHI PART NUMBER: TAXI ASM MOUN CLIP CDT BRACKET

DELPHI PART NUMBER: 12034064

SIZE A1x4 | SCALE 2:1 | SHEET NO. 1 | OF SHEET 21 | REV R 22 -

ISO34064

X-ON Electronics

Largest Supplier of Electrical and Electronic Components

Click to view similar products for Automotive Connectors ***category:***

Click to view products by Delphi ***manufacturer:***

Other Similar products are found below :

003-018-000 600858 60403001 60993906-B 60993913-B 629515004020001 M83723/71R1808N L/C M902-2131 M902-2161 M902-2344 72.330.1035.1 73.353.4028.0 F118010 F119300-B F132210 F166900 F180100 F258300 F258300-B F294300-B F339100 F339700 F358300-B F374110 F407400 F412210 F444110 F487000 F495100 F500900-B F509500B-B 770444-1 827153-1 881735-1 8N1515-32-24P 9-1326729-8 925467-1 925474-1 928905-1 936398-2 964562-4 964731-2 968782-1 GT17SA-8DS-HU GT17VS-10DP-5.2CF 98315-0001 98315-0010 98891-1012 98895-2014 98936-1039