DLL® 德利来 Connectors

PHD

2.00mm Pitch Wire To Board Connector

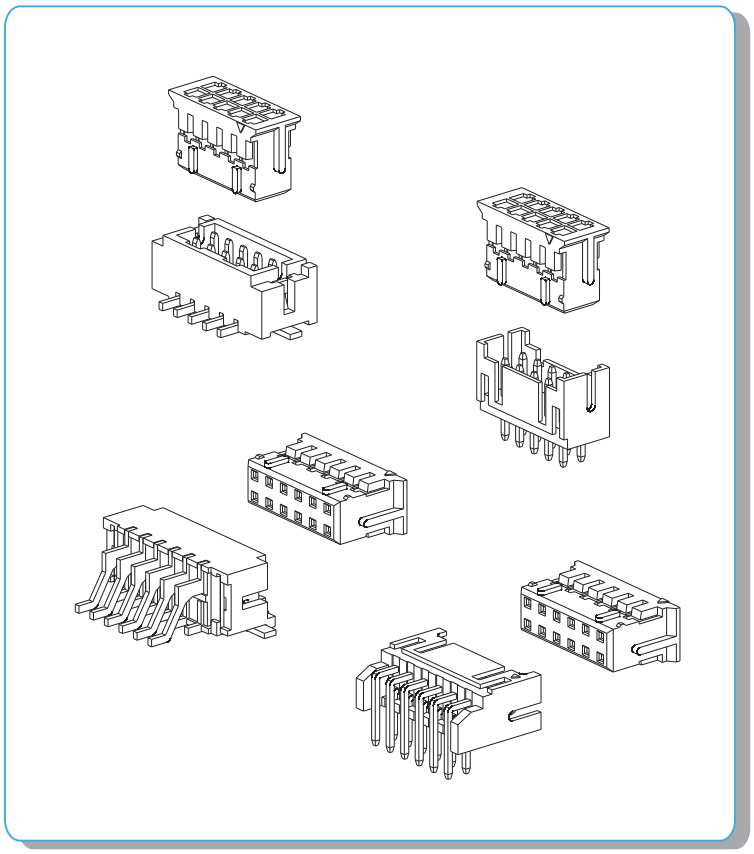

技术特性/Specifications:

额定电压 Rated voltage: 250V AC, DC
额定电流 Rated current: 3A AC,DC
接触电阻 Contact resistance: 20mΩ max
绝缘电阻 Insulation resistance: 1000MΩ min
耐压 Withstand volage: 1000V AC/minute
环境温度 Ambient temperature:-40℃～+105℃
适用线规 Wire range: AWG#28～#22

IATF16949 CQC ESI ISO9001 ISO14001 REACH ROHS SONY Green Partner CE

电话/TEL：+86-577-62213798
传真/FAX：+86-577-62122577
http://www.zjdll.com

REV.	REVISION DESCRIPTION	DATE	APPD

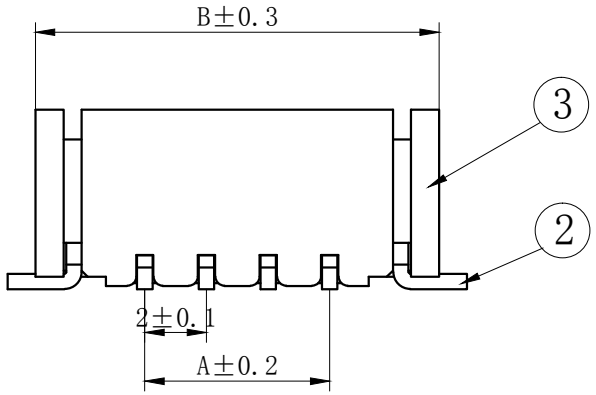

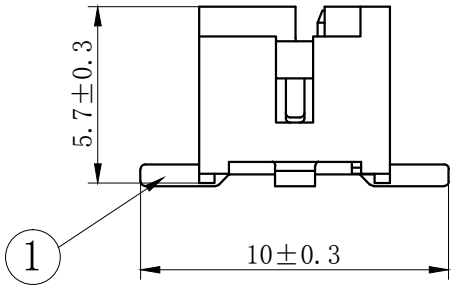

NOTES

Available in 04 through 60 Circuits.

Mates with DL20004-Y Series Housing.

Material : LCP UL94V-0.

Pin Material : Brass.Tin-plated .

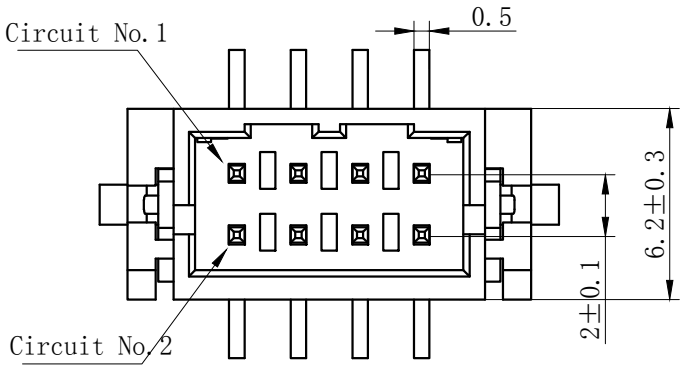

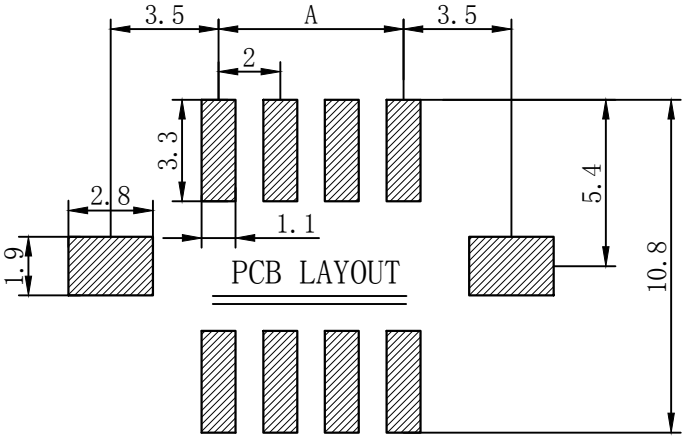

序号	图号	名称	材料	数量	附件
3	3	基座	LCP	1	UL94V-0
2	2	焊片	黄铜	2	镀锡
1	1	接触件	黄铜	N	镀锡

Circuits	Product name	Dimension mm A	Dimension mm B	Circuits	Product name	Dimension mm A	Dimension mm B
2X2	PHD-4AB	2.00	9.10	2X11	PHD-22AB	20.00	27.10
2X3	PHD-6AB	4.00	11.10	2X12	PHD-24AB	22.00	29.10
2X4	PHD-8AB	6.00	13.10	2X13	PHD-26AB	24.00	31.10
2X5	PHD-10AB	8.00	15.10	2X14	PHD-28AB	26.00	33.10
2X6	PHD-12AB	10.00	17.10	2X15	PHD-30AB	28.00	35.10
2X7	PHD-14AB	12.00	19.10	2X16	PHD-32AB	30.00	37.10
2X8	PHD-16AB	14.00	21.10	2X17	PHD-34AB	32.00	39.10
2X9	PHD-18AB	16.00	23.10	—	—	—	—
2X10	PHD-20AB	18.00	25.10	2X30	PHD-60AB	58.00	65.10

GENERAL TOLERANCES (UNLESS SPECIFIED)		ZHE JIANG DELI CONNECTORS CO .,LTD			
.X: ± 0.25	X° : ± 3.0°	PRODUCT NAME: DL20004(PHD)-AB		TITLE: 2.00 mm Pitch Wire To Board Wafer	
.XX: ± 0.15	.X° : ± 2.0°				
.XXX: ± 0.01	.XX° : ± 1.0°	DR: Chen Quan Long	DATE:21/08/01	PART NO:	
FINISH:		CHKD:Wu Hui	DATE:21/08/01	SCALE: N/A	PAGE: 1/1
DRAWING NO:		APPD:Ren An De	DATE:21/08/01	UNITS: mm	REV.: A

REV.	REVISION DESCRIPTION	DATE	APPD

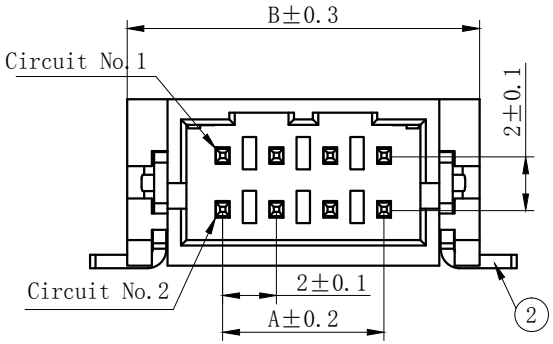

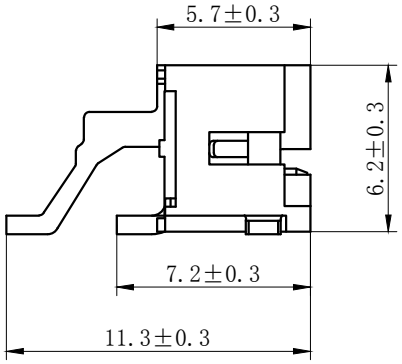

NOTES

Available in 04 through 60 Circuits.

Mates with DL20004-Y Series Housing.

Material : LCP UL94V-0.

Pin Material : Brass.Tin-plated .

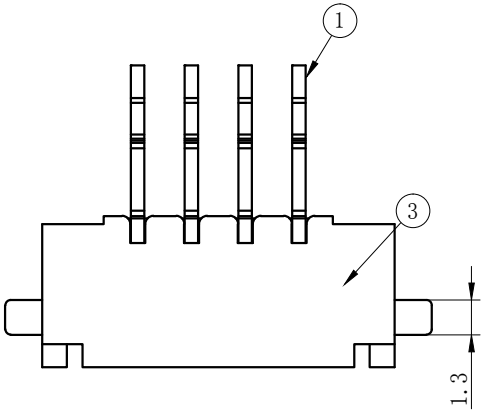

序号	图号	名称	材料	数量	附件
3	3	基座	LCP	1	UL94V-0
2	2	焊片	黄铜	2	镀锡
1	1	接触件	黄铜	N	镀锡

Circuits	Product name	Dimension mm A	Dimension mm B	Circuits	Product name	Dimension mm A	Dimension mm B
2X2	PHD-4AWB	2.00	9.10	2X11	PHD-22AWB	20.00	27.10
2X3	PHD-6AWB	4.00	11.10	2X12	PHD-24AWB	22.00	29.10
2X4	PHD-8AWB	6.00	13.10	2X13	PHD-26AWB	24.00	31.10
2X5	PHD-10AWB	8.00	15.10	2X14	PHD-28AWB	26.00	33.10
2X6	PHD-12AWB	10.00	17.10	2X15	PHD-30AWB	28.00	35.10
2X7	PHD-14AWB	12.00	19.10	2X16	PHD-32AWB	30.00	37.10
2X8	PHD-16AWB	14.00	21.10	2X17	PHD-34AWB	32.00	39.10
2X9	PHD-18AWB	16.00	23.10	—	—	—	—
2X10	PHD-20AWB	18.00	25.10	2X30	PHD-60AWB	58.00	65.10

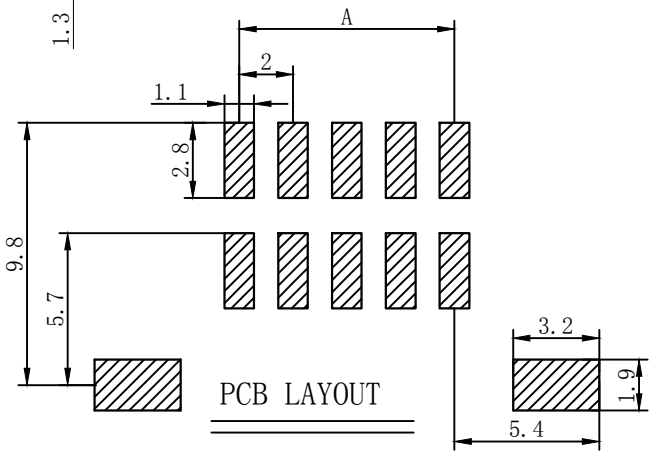

PCB LAYOUT

GENERAL TOLERANCES (UNLESS SPECIFIED)		ZHE JIANG DELI CONNECTORS CO .,LTD		
.X: ± 0.25	X° : ± 3.0°	PRODUCT NAME: DL20004(PHD)-AWB	TITLE: 2.00 mm Pitch Wire To Board Wafer	
.XX: ± 0.15	.X° : ± 2.0°			
.XXX: ± 0.01	.XX° : ± 1.0°	DR: Chen Quan Long	DATE:21/08/01	PART NO:
FINISH:		CHKD:Wu Hui	DATE:21/08/01	SCALE: N/A / PAGE: 1/1
DRAWING NO:		APPD:Ren An De	DATE:21/08/01	UNITS: mm / REV.: A

REV.	REVISION DESCRIPTION	DATE	APPD

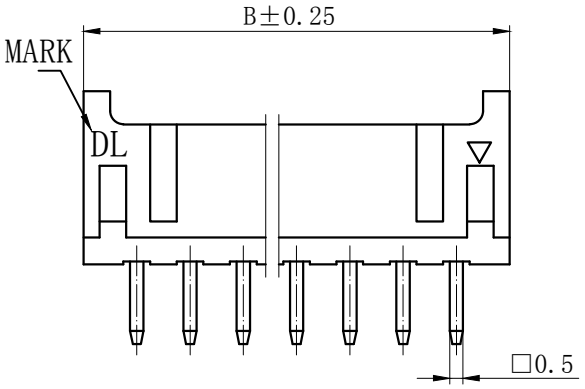

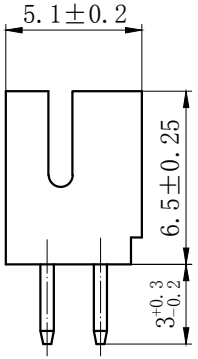

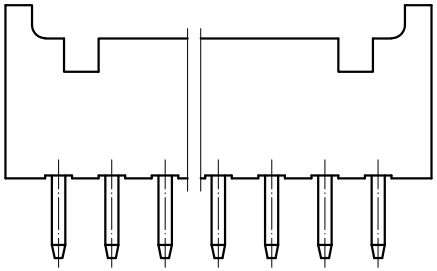

NOTES

Available in 04 through 60 Circuits.
Mates with DL20004-Y Series Housing.
Material : Nylon UL94V-0(2).
0.50mm Square Pin.
Pin Material : Brass / Tin-Plated.

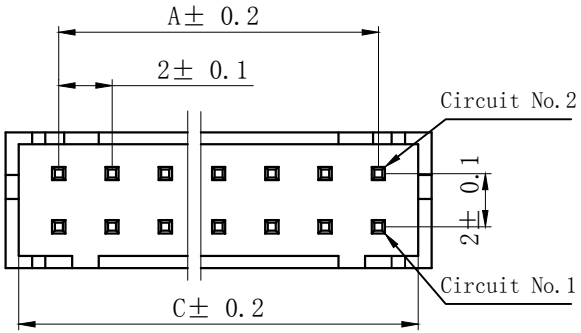

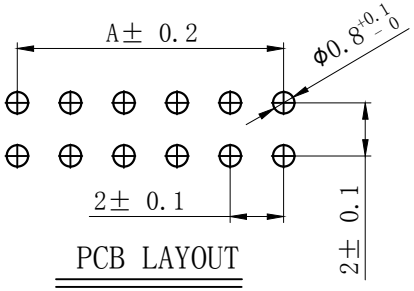

PCB LAYOUT

Circuits	Product name	Dimension mm			Circuits	Product name	Dimension mm			Circuits	Product name	Dimension mm		
		A	B	C			A	B	C			A	B	C
2X2	PHD-4A	2.00	6.00	5.00	2X10	PHD-20A	18.00	22.00	21.00.	2X18	PHD-36A	34.00	38.00	37.00
2X3	PHD-6A	4.00	8.00	7.00	2X11	PHD-22A	20.00	24.00	23.00	2X19	PHD-38A	36.00	40.00	39.00
2X4	PHD-8A	6.00	10.00	9.00	2X12	PHD-24A	22.00	26.00	25.00	2X20	PHD-40A	38.00	42.00	41.00
2X5	PHD-10A	8.00	12.00	11.00	2X13	PHD-26A	24.00	28.00	27.00	2X21	PHD-42A	40.00	44.00	43.00
2X6	PHD-12A	10.00	14.00	13.00	2X14	PHD-28A	26.00	30.00	29.00	2X22	PHD-44A	42.00	46.00	45.00
2X7	PHD-14A	12.00	16.00	15.00	2X15	PHD-30A	28.00	32.00	31.00	~	~	~	~	~
2X8	PHD-16A	14.00	18.00	17.00	2X16	PHD-32A	30.00	34.00	33.00	2X30	PHD-60A	58.00	62.00	61.00
2X9	PHD-18A	16.00	20.00	19.00	2X17	PHD-34A	32.00	36.00	35.00					

GENERAL TOLERANCES (UNLESS SPECIFIED)		ZHE JIANG DELI CONNECTORS CO .,LTD		
.X: ± 0.25	X° : ± 3.0°	PRODUCT NAME: DL20004(PHD)-A	TITLE: 2.00 mm Pitch Wire To Board Wafer	
.XX: ± 0.15	.X° : ± 2.0°			
.XXX: ± 0.01	.XX° : ± 1.0°	DR:Chen Quan Long	DATE:19/08/01	PART NO:
FINISH:		CHKD:Wu Hui	DATE:19/08/01	SCALE: N/A / PAGE: 1/1
DRAWING NO:		APPD:Ren An De	DATE:19/08/01	UNITS: mm / REV.: A

REV.	REVISION DESCRIPTION	DATE

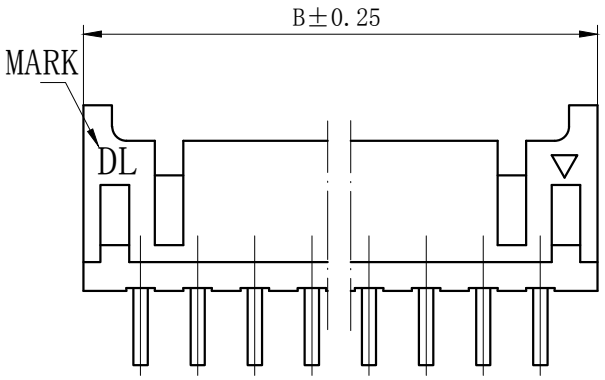

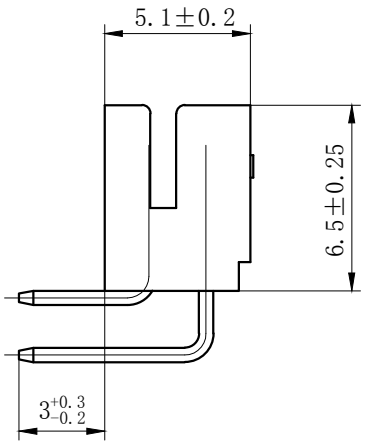

NOTES

Available in 04 through 60 Circuits.

Mates with DL20004-Y Series Housing.

Material : Nylon UL94V-0(2).

0.50mm Square Pin.

Pin Material : Brass / Tin-Plated.

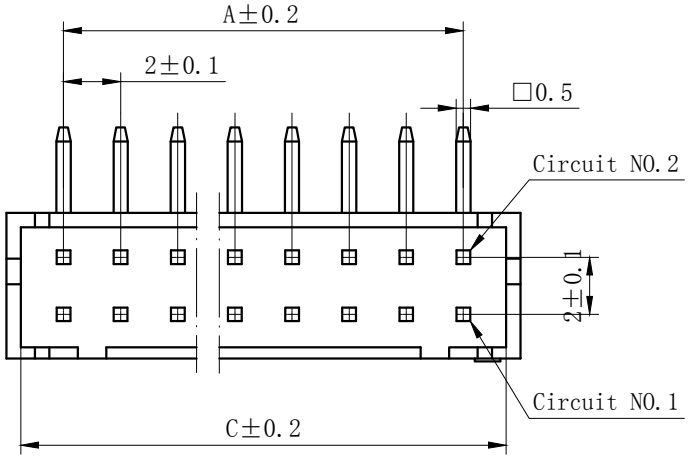

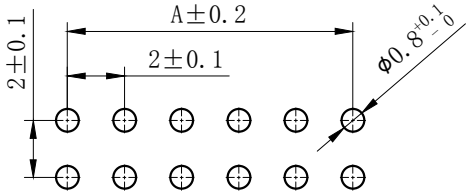

PCB LAYOUT

Circuits	Product name	Dimension mm			Circuits	Product name	Dimension mm			Circuits	Product name	Dimension mm		
		A	B	C			A	B	C			A	B	C
2X2	PHD-4AW	2.00	6.00	5.00	2X10	PHD-20AW	18.00	22.00	21.00.	2X18	PHD-36AW	34.00	38.00	37.00
2X3	PHD-6AW	4.00	8.00	7.00	2X11	PHD-22AW	20.00	24.00	23.00	2X19	PHD-38AW	36.00	40.00	39.00
2X4	PHD-8AW	6.00	10.00	9.00	2X12	PHD-24AW	22.00	26.00	25.00	2X20	PHD-40AW	38.00	42.00	41.00
2X5	PHD-10AW	8.00	12.00	11.00	2X13	PHD-26AW	24.00	28.00	27.00	2X21	PHD-42AW	40.00	44.00	43.00
2X6	PHD-12AW	10.00	14.00	13.00	2X14	PHD-28AW	26.00	30.00	29.00	2X22	PHD-44AW	42.00	46.00	45.00
2X7	PHD-14AW	12.00	16.00	15.00	2X15	PHD-30AW	28.00	32.00	31.00	~	~	~	~	~
2X8	PHD-16AW	14.00	18.00	17.00	2X16	PHD-32AW	30.00	34.00	33.00	2X30	PHD-60AW	58.00	62.00	61.00
2X9	PHD-18AW	16.00	20.00	19.00	2X17	PHD-34AW	32.00	36.00	35.00					

GENERAL TOLERANCES (UNLESS SPECIFIED)		ZHE JIANG DELI CONNECTORS CO .,LTD			
.X: ± 0.25	X° : ± 3.0°	PRODUCT NAME: DL20004(PHD)-AW		TITLE: 2.0 mm Pitch Wire To Board Wafer	
.XX: ± 0.15	.X° : ± 2.0°				
.XXX: ± 0.01	.XX° : ± 1.0°	DR: Chen Quan Long	DATE:19/08/01	PART NO:	
FINISH:		CHKD: Wu Hui	DATE:19/08/01	SCALE: N/A	PAGE: 1/1
DRAWING NO:		APPD:Ren An De	DATE:19/08/01	UNITS: mm	REV.: A

REV.	REVISION DESCRIPTION	DATE

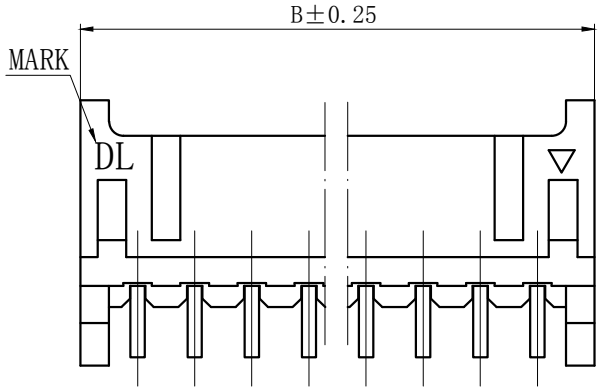

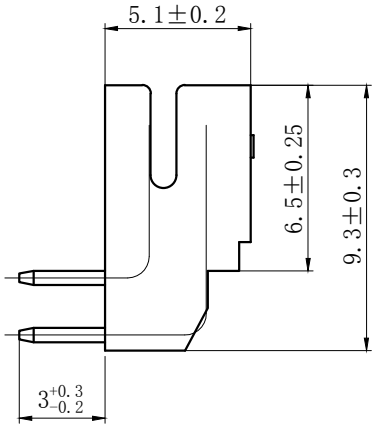

NOTES

Available in 04 through 60 Circuits.

Mates with DL20004-Y Series Housing.

Material : Nylon UL94V-0(2).

0.50mm Square Pin.

Pin Material : Brass / Tin-Plated.

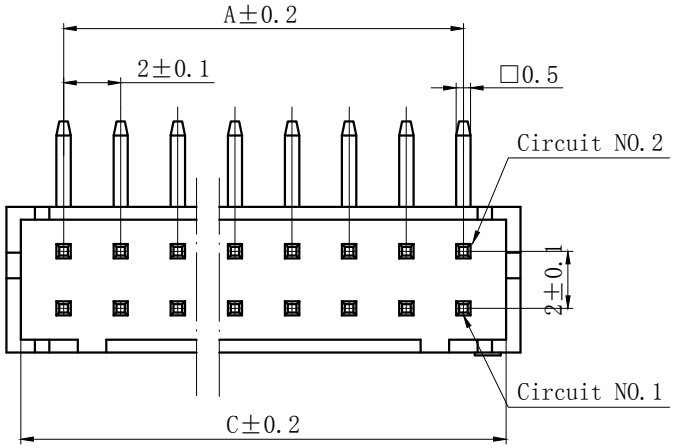

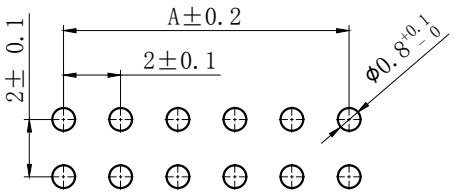

PCB LAYOUT

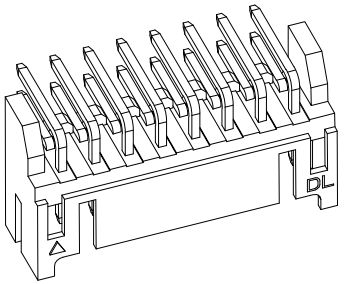

Circuits	Product name	Dimension mm			Circuits	Product name	Dimension mm			Circuits	Product name	Dimension mm		
		A	B	C			A	B	C			A	B	C
2X2	PHD-4AWD	2.00	6.00	5.00	2X10	PHD-20AWD	18.00	22.00	21.00.	2X18	PHD-36AWD	34.00	38.00	37.00
2X3	PHD-6AWD	4.00	8.00	7.00	2X11	PHD-22AWD	20.00	24.00	23.00	2X19	PHD-38AWD	36.00	40.00	39.00
2X4	PHD-8AWD	6.00	10.00	9.00	2X12	PHD-24AWD	22.00	26.00	25.00	2X20	PHD-40AWD	38.00	42.00	41.00
2X5	PHD-10AWD	8.00	12.00	11.00	2X13	PHD-26AWD	24.00	28.00	27.00	2X21	PHD-42AWD	40.00	44.00	43.00
2X6	PHD-12AWD	10.00	14.00	13.00	2X14	PHD-28AWD	26.00	30.00	29.00	2X22	PHD-44AWD	42.00	46.00	45.00
2X7	PHD-14AWD	12.00	16.00	15.00	2X15	PHD-30AWD	28.00	32.00	31.00	~	~	~	~	~
2X8	PHD-16AWD	14.00	18.00	17.00	2X16	PHD-32AWD	30.00	34.00	33.00	2X30	PHD-60AWD	58.00	62.00	61.00
2X9	PHD-18AWD	16.00	20.00	19.00	2X17	PHD-34AWD	32.00	36.00	35.00					

GENERAL TOLERANCES (UNLESS SPECIFIED)		ZHE JIANG DELI CONNECTORS CO .,LTD			
.X: ± 0.25	X° : ± 3.0°	PRODUCT NAME: DL20004(PHD)-AWD		TITLE: 2.0 mm Pitch Wire To Board Wafer	
.XX: ± 0.15	.X° : ± 2.0°				
.XXX: ± 0.01	.XX° : ± 1.0°	DR: Chen Quan Long	DATE:19/08/01	PART NO:	
FINISH:		CHKD: Wu Hui	DATE:19/08/01	SCALE: N/A	PAGE: 1/1
DRAWING NO:		APPD:Ren An De	DATE:19/08/01	UNITS: mm	REV.: A

REV.	REVISION DESCRIPTION	DATE	APPD

NOTES

Available in 04 through 60 Circuits.

Match with DL20004 series housing

Material : Nylon UL94V-0(2).

Accepts DL20004-T Crimp Terminal.

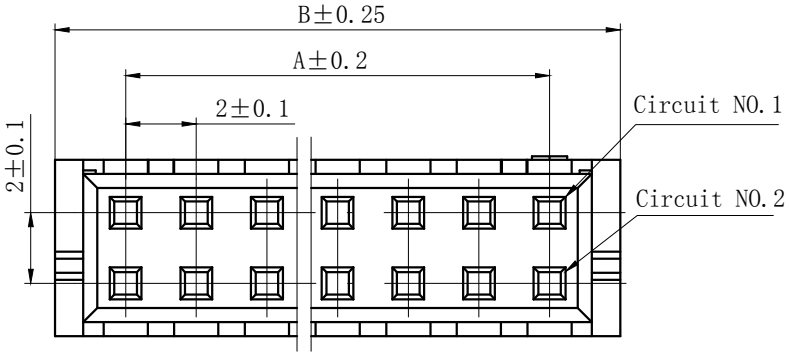

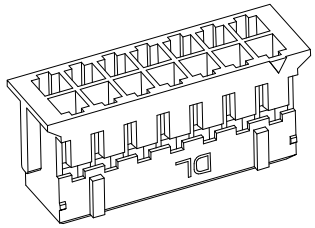

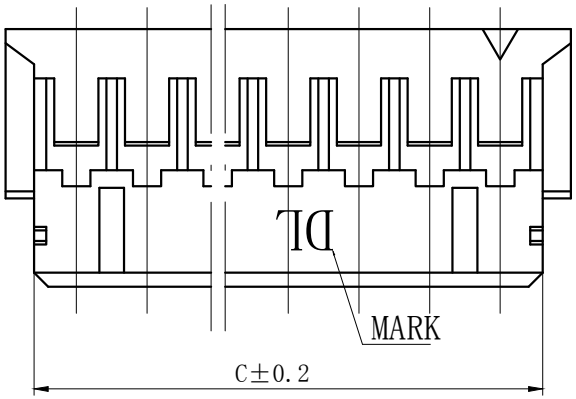

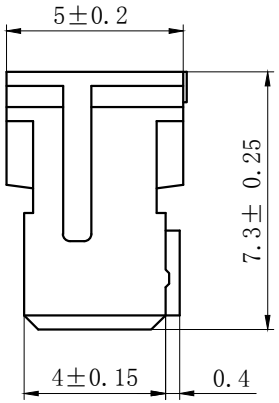

Circuits	Product name	Dimension mm			Circuits	Product name	Dimension mm			Circuits	Product name	Dimension mm		
		A	B	C			A	B	C			A	B	C
2X2	PHD-4Y	2.0	6.0	4.6	2X10	PHD-20Y	18.0	22.0	20.6	2X18	PHD-36Y	34.0	38.0	36.6
2X3	PHD-6Y	4.0	8.0	6.6	2X11	PHD-22Y	20.0	24.0	22.6	2X19	PHD-38Y	36.0	40.0	38.6
2X4	PHD-8Y	6.0	10.0	8.6	2X12	PHD-24Y	22.0	26.0	24.6	2X20	PHD-40Y	38.0	42.0	40.6
2X5	PHD-10Y	8.0	12.0	10.6	2X13	PHD-26Y	24.0	28.0	26.6	~	~	~	~	~
2X6	PHD-12Y	10.0	14.0	12.6	2X14	PHD-28Y	26.0	30.0	28.6	2X30	PHD-60Y	58.0	62.0	60.6
2X7	PHD-14Y	12.0	16.0	14.6	2X15	PHD-30Y	28.0	32.0	30.6					
2X8	PHD-16Y	14.0	18.0	16.6	2X16	PHD-32Y	30.0	34.0	32.6					
2X9	PHD-18Y	16.0	20.0	18.6	2X17	PHD-34Y	32.0	36.0	34.6					

GENERAL TOLERANCES (UNLESS SPECIFIED)		ZHE JIANG DELI CONNECTORS CO .,LTD			
.X: ± 0.25	X° : ± 3.0°	PRODUCT NAME: DL20004(PHD)-Y		TITLE: 2.00 mm Pitch Wire To Board Housing	
.XX: ± 0.15	.X° : ± 2.0°				
.XXX: ± 0.01	.XX° : ± 1.0°	DR:Chen Qhuan Long	DATE:21/08/01	PART NO:	
FINISH:		CHKD:Wu Hui	DATE:21/08/01	SCALE: N/A	PAGE: 1/1
DRAWING NO:		APPD:Ren An De	DATE:21/08/01	UNITS: mm	REV.: A

REV.	REVISION DESCRIPTION	DATE	APPD
B			
C			

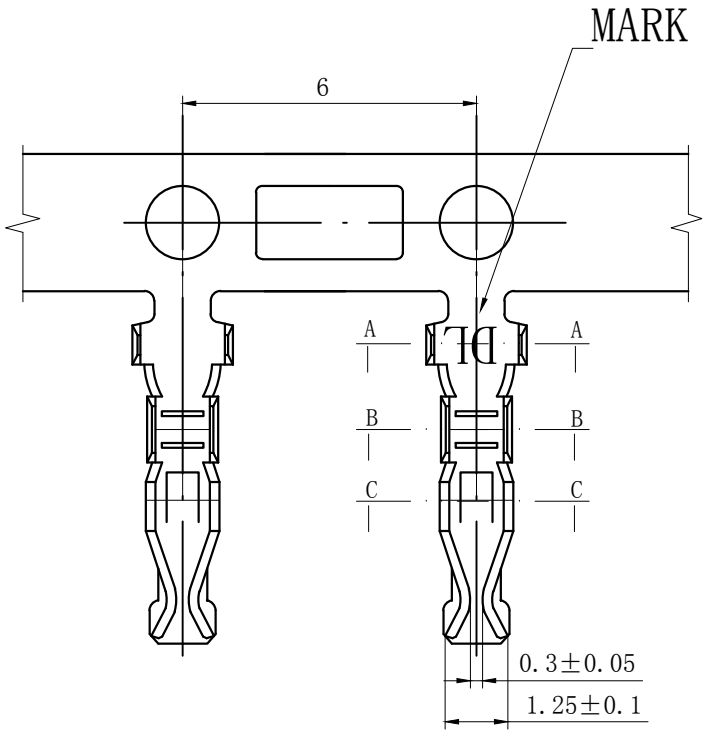

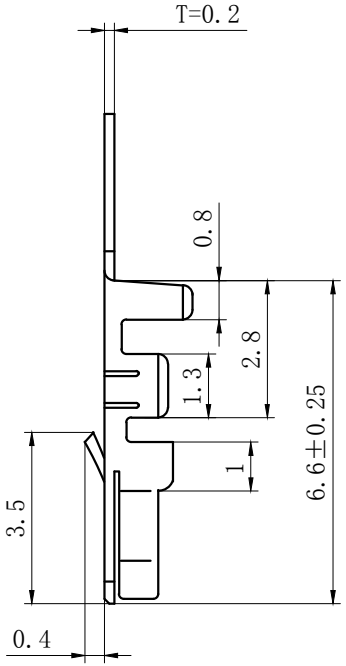

NOTES

Used in DL20004-Y or DL20016-Y or DL20017-Y Series Housing.

Accepts AWG #28～22 Wire Range.

0.08～ 0.33 mm^2 .

Insulation O.D.=0.9～1.5 mm.

Material : Phosphor Bronze .

Finish: Tin plated.

Thickness: 0.2 mm.

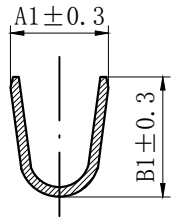

SECTION A-A

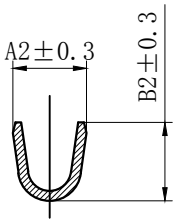

SECTION B-B

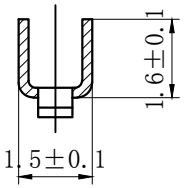

SECTION C-C

Product name	Dimension mm				适用线规AWG
	A1	B1	A2	B2	
PHD-T-G	2.3	2.45	1.5	1.6	#26-22
PHD-T-D	1.9	1.6	1.4	1.15	#28-24

GENERAL TOLERANCES (UNLESS SPECIFIED)		ZHE JIANG DELI CONNECTORS CO .,LTD			
.X: ± 0.25	X° : ± 3.0°	PRODUCT NAME: DL20004(PHD)-T		TITLE: 2.00 mm Pitch Crimp Terminal	
.XX: ± 0.2	.X° : ± 2.0°				
.XXX: ± 0.01	.XX° : ± 1.0°	DR:Chen QuanLong	DATE:21.3.31	PART NO:	
FINISH:		CHKD:Wu Hui	DATE:21.3.31	SCALE: N/A	PAGE: 1/1
DRAWING NO:		APPD:Ren An De	DATE:21.3.31	UNITS: mm	REV.: A

X-ON Electronics

Largest Supplier of Electrical and Electronic Components

Click to view similar products for Headers & Wire Housings ***category:***

Click to view products by DLL ***manufacturer:***

Other Similar products are found below :

0015917161 0022155065 57102-F02-18ULF 58102-G61-06LF 582553-1 01.001.5753.1 0050291907 02.125.8002.8 609-3404 61062-3 CSU011177004 622-0430 622-3653LF 63453-116 636-1030 636-1427 636-3427 636-4007 641938-9 65495-038 65692-001LF 65781-018 65781-047 65817-010LF 65817-015LF 67095-007LF 67601157 68631-112 68645-018 699319-000 70.362.1628.0 70-4210 70-4226B 70-4853B 71.350.2428.0 733-134 733-162 760-3052 MHR-64-VUAL 80.063.4001.1 800-90-001-10-001000 801-43-002-10-013000 801-43-006-10-002000 803-43-024-10-001000 803-93-012-10-001000 8-1437020-4 819-22-004-30-001101 820-22-006-30-001101 820-22-008-30-001101 821-22-002-10-001101