The power of space

The Bussmann™ series Compact Circuit Protector for Class CF CUBEFuse™ delivers the smallest footprint compared to any Class J disconnect solution — requiring up to 51% less space.

Contents

Description	Section page
Compact Circuit Protector disconnect switches	
Class CF CUBEFuse up to 100 A (CCP2-CF)	2-8
Class CF CUBEFuse 200 and 400 A (CCP2-CF)	9-12
Accessories for CUBEFuse CCP2	13-
Multi-wire lug kits	13-14
Selector and pistol handles, shafts, NFPA 79 compliant handles	15-16
Flange handle rod and cable operators	17
200 and 400 A switch rotary mechanisms	18
Auxiliary contacts	19-20
PLC fuse monitors (up to 100 A switches)	21-22
How to order Class CF switches	23-35
Switches up to 100 A	23-30
200 and 400 A switches	32-35

Description	Section page
Compact Circuit Protector disconnect switches	
Compact Circuit Protector Base (CCP2B - CUBEFuse)	36-37
Class CC, UL supplemental and IEC 10x38 (CCP2)	38-42
Accessories for Class CC, UL supp. and IEC 10x38 CCP2	43-47
Multi-wire lug kits	43
Selector and pistol handles, shafts, NFPA 79 compliant handles	44
Auxiliary contacts	45
PLC fuse monitors	46-47
How to order Class CC, UL supplemental and IEC 10x38 switches	48-51
Low profile Class CC and G, UL supplemental and IEC 10x38 (CCPLP)	52-53
UL 98 fused disconnect switches, 30 to 800 A	
Introduction and agency information	54
Product line summary — UL	55
30 A Class CC and compact Class J	56-57
30 A standard Class J	58-59
60 A compact Class J	60-61
60 A standard Class J	62-63
100 A standard Class J	64-65
200 A and 400 A standard Class J	66-68
600 A standard Class J and 800 A Class L	69-70
UL 98 non-fused disconnect switches, 30 to 1200 A	
Introduction, agency information and IEC product summary	71
UL product summary	72
30 A, 60 A and 100 A compact	73-74
100 A, 200 A and 400 A standard	75-76
600 A, 800 A, 1000 A and 1200 A standard	77-78
UL 508 non-fused disconnect switches, 16 to 80 A	
Introduction, agency information and IEC product summary	79
UL product summary	80
16 A, 25 A, 40 A, 63 A and 80 A	81-83
Enclosed UL 98 and UL 508 disconnect switches	
Introduction and agency information	84
Fused UL 98 enclosed disconnects, 30 to 800 A	85-86
Non-fused UL 98 enclosed disconnects, 30 to 1200 A	87-88
Non-fused UL 508 enclosed disconnects, 16 to 80 A	89-90

Compact Circuit Protector

UL 98 Class CF disconnect switches from 30 to 400 A

CCP2 switch up to 100 A
with and without rotary operation mechanisms

200 A CCP2 switch
with and without rotary operation mechanisms

400 A CCP2 switch
with and without rotary operation mechanisms

Class CF CCP contents **Section page**

30, 60 and 100 amp switches
Descriptions and specifications 3-4
Catalog numbers 5
Terminal data 6
Dimensions 6-8
200 and 400 A switches
Descriptions and specifications 9-10
Catalog numbers and horsepower ratings 10
Available lugs 10
Dimensions 11-12
Accessories
Multi-wire lug kits
30, 60 and 100 A switches 13
200 and 400 A switches 14
Handles and shafts
Selector and pistol handles 15
Handle shafts 16
NFPA 79 compliant handles 16
Flange handle rod and cable operators 17
200 and 400 A switches
Front rotary mechanisms 18
Side rotary mechanisms 18
Terminal shroud kits 18
Phase barrier kits 18
Handle extension 18
Auxiliary contacts
30, 60 and 100 A switches 19
200 and 400 A switches 20
PLC fuse monitor (30, 60 and 100 A switches) 21-22
How to order
30 and 60 A switches
Switch only 23
Front and right side rotary switches 24-25
Left side rotary switches 26
100 A switches
Switch only 27
Front and right side rotary switches 28-29
Left side rotary switches 30
200 and 400 A switches
200 A switches 32-33
400 A switches 34-35

Catalog symbols for 30, 60 and 100 A switches

Symbol	Description
CCP2-(pole)-(amps)CF	Switch only
CCP2R-(pole)-(amps)CF	Right front rotary, clockwise operated switch
CCP2RL-(pole)-(amps)CF	Left front rotary, clockwise operated switch
CCP2S-(pole)-(amps)CF	Right side rotary, clockwise operated switch
CCP2SL-(pole)-(amps)CF	Left side rotary, counterclockwise operated switch

Description

The revolutionary, next generation Bussmann™ series Compact Circuit Protector (cat. no. CCP2) is a fused UL® 98 branch circuit disconnect switch utilizing the UL Class CF time-delay or fast-acting CUBEFuse™ with Class J electrical performance. With up to a 51 percent smaller footprint than a traditional fusible solution, these switches provide a high 200 kA SCCR to help improve panel and assembly SCCR.

The 35 mm DIN-Rail mount CCP2 is available in a variety of 30, 60 and 100 amp configurations to meet many application needs including rotary operation.

The switch-only versions of the 30, 60 and 100 A disconnects are direct, drop-in replacements for the earlier models (noted by a catalog number starting "CCP-"). The auxiliary contacts and PLC remote fuse indicator are backwards compatible. The multi-wire lug kits and terminal shrouds are not.

Application flexibility is extended with an optional multi-wire lug kit, featuring finger-safe shrouds, that provides three (30 and 60 A switches) and six (100 A switches) additional wire ports on each pole for power distribution applications.

Other accessories include a PLC fuse monitor for open fuse indication and NO/NC auxiliary contacts that easily integrate into various monitoring systems.

Front and side rotary operated versions are easily applied for through-the-door or through the left or right side operation to enhance safety.

Ratings

- Volts
  - 347 Vac (1-pole switches)
  - 600 Vac (2- and 3-pole switches)
  - 125 Vdc*
- Amps
  - 30 A
  - 60 A
  - 100 A
- SCCR
  - 200 kA RMS Sym.
  - 100 kA DC

Poles

- 1-, 2- and 3-poles catalog number dependent

* Switch amp rating and installed fuse amp rating dependent, see catalog number table for details.

Agency information

- UL 98 Listed, Guide WHTY, File E302370
- cULus to Canadian Standard 22.2 No. 4-04, Guide WHTY7, File E302370
- RoHS compliant
- CE

Conductors/terminals

- 75°C Cu, see conductor tables for size, type and torque information
- Box lug, single/dual conductor
- Fork terminal suitable for line, load or accessory connection, max. 30 A suitable for use with:
  - 10-24 screw for 30 and 60 A switches
  - 1/4-28 screw for 100 A switches
- Multi-wire lug kits — see accessories for details

Storage and operating temperature

- -20°C to 75°C (-4°F to 167°F)*

* For fuse performance under or above 25°C, consult fuse performance derating charts in the Bussmann Division publication no. 3002, titled Selecting Protective Devices (SPD)

Lockout/tagout provisions

- 1/4" lock, direct use on switches without rotary mechanisms requires a lock with a straight shank of sufficient length to engage all poles

Minimum enclosure size per UL 98*

- 30 and 60 A switch 10"x 8"x 6"(254 x 203 x 152 mm)
- 100 A switch, 12" x 10" x 6" (305 x 254 x 152 mm)

* Smaller enclosures may be used at the discretion of the user, with adherence to NEC minimum wire bend radius requirements.

Mounting**

- 35 mm DIN-Rail

**Switch is panel mount with flange handle cable operator.

Local open fuse indication minimum voltage

- 90 Vac, requires an open fuse to be in the CCP2 and the switch in the ON position

Accessories

- Multi-wire lug kits with terminal shrouds
- Selector and pistol handles for use with rotary operated switches
- 8 mm shafts for use with selector and pistol handles
- Auxiliary contacts
- PLC fuse monitor
- NFPA 79 compliant handle
- Flange handle rod and cable operators

Features

- Uses UL Class CF time-delay or fast-acting CUBEFuse with Class J electrical performance
- Extremely compact design at 25.4 mm (1 inch) wide per pole
- Amp rating rejection disconnects will not accept a CUBEFuse amp rating greater than switch rating
- High 200 kA short-circuit current rating
- Disconnect rated to provide means for load isolation
- Full voltage rated at 347 Vac (1-pole switches) and 600 Vac (2- and 3-pole switches)
- 125 Vdc* rated to meet specialized applications
- UL 98 Listed and suitable for branch circuit disconnect and branch circuit protection with installed fuses
- Horsepower rated
- Open fuse indication:
  - Local open fuse indication light standard on each pole
  - Optional PLC fuse monitor for wired remote open fuse indication by signaling a PLC and opening a contactor to de-energize all phases, if required
- Additional open fuse indication can be provided by the indicating time-delay CUBEFuse (6 to 100 A)
- Finger-safe construction with 10 AWG (6 mm^2) wire or larger
- Built-in switch interlock prohibits removing or installing the fuse while in the ON position
- Padlockable for lockout/tagout procedures with a 1/4″ lock
- Rotary operated versions provide for through-the-door and through-the-side operation flexibility and enhanced safety with:
  - Right or left front operation
  - Right or left side operation
- Optional selector and pistol handles, and shafts available for use with rotary operated versions
- Multi-wire lug kits with terminal shrouds allow for power distribution to multiple loads. Each lug has three (30 and 60 A switches) or six (100 A switches) ports rated for single and dual wires (see lug kits in accessories for details).

* Switch amp rating and installed fuse amp rating dependent, see catalog number table for details.

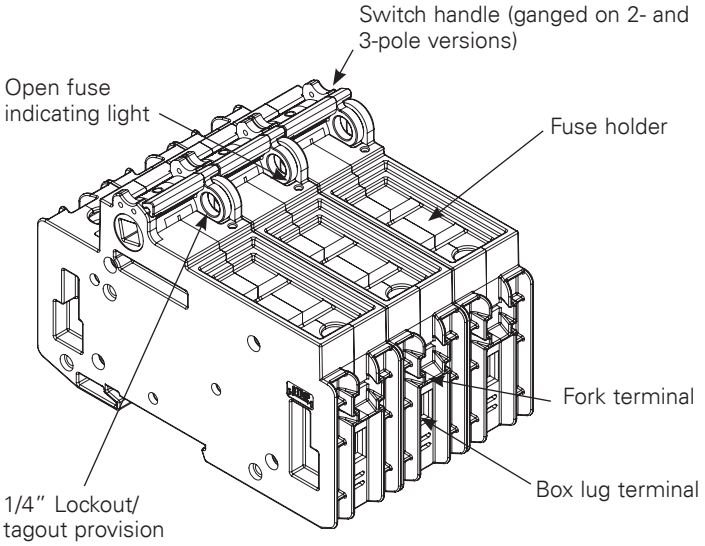

Right front rotary operated CCP2 switch with PLC fuse monitor.

Rotary operating versions

Left front

Uses clockwise handles

Right front

Uses clockwise handles

Left side

Uses counterclockwise handles

Right side

Uses clockwise handles

30, 60 and 100 A switch catalog numbers

Catalog no.	Poles	Description/switch operation	Volts	SCCR	Max Hp rating (Vac) 120	240	480	600
30 amp switches								
CCP2-1-30CF	1	Switch only	347 Vac/125 Vdc	200 kA AC 100 kA DC	1-1/2	—	—	—
CCP2-2-30CF	2		600 Vac/125 Vdc		—	3	—	—
CCP2-3-30CF	3		600 Vac		—	5	15	10
CCP2R-2-30CF	2	Right front rotary, clockwise	600 Vac/125 Vdc		—	3	—	—
CCP2R-3-30CF	3		600 Vac		—	5	15	10
CCP2RL-2-30CF	2	Left front rotary, clockwise	600 Vac/125 Vdc		—	3	—	—
CCP2RL-3-30CF	3		600 Vac		—	5	15	10
CCP2S-2-30CF	2	Right side rotary, clockwise	600 Vac/125 Vdc		—	3	—	—
CCP2S-3-30CF	3		600 Vac		—	5	15	10
CCP2SL-2-30CF	2	Left side rotary, counterclockwise	600 Vac/125 Vdc		—	3	—	—
CCP2SL-3-30CF	3		600 Vac		—	5	15	10
60 amp switches								
CCP2-1-60CF	1	Switch only	347 Vac/125 Vdc*	200 kA AC 100 kA DC	3	—	—	—
CCP2-2-60CF	2		600 Vac/125 Vdc*		—	7-1/2	—	—
CCP2-3-60CF	3		600 Vac		—	7-1/2	20	10
CCP2R-2-60CF	2	Right front rotary, clockwise	600 Vac/125 Vdc*		—	7-1/2	—	—
CCP2R-3-60CF	3		600 Vac		—	7-1/2	20	10
CCP2RL-2-60CF	2	Left front rotary, clockwise	600 Vac/125 Vdc*		—	7-1/2	—	—
CCP2RL-3-60CF	3		600 Vac		—	7-1/2	20	10
CCP2S-2-60CF	2	Right side rotary, clockwise	600 Vac/125 Vdc*		—	7-1/2	—	—
CCP2S-3-60CF	3		600 Vac		—	7-1/2	20	10
CCP2SL-2-60CF	2	Left side rotary, counterclockwise	600 Vac/125 Vdc*		—	7-1/2	—	—
CCP2SL-3-60CF	3		600 Vac		—	7-1/2	20	10
100 amp switches								
CCP2-1-100CF	1	Switch only	347 Vac/125 Vdc**	200 kA AC 100 kA DC	5	—	—	—
CCP2-2-100CF	2		600 Vac/125 Vdc**		—	10	—	—
CCP2-3-100CF	3		600 Vac		—	20	50	40
CCP2R-2-100CF	2	Right front rotary, clockwise	600 Vac/125 Vdc**		—	10	—	—
CCP2R-3-100CF	3		600 Vac		—	20	50	40
CCP2RL-2-100CF	2	Left front rotary, clockwise	600 Vac/125 Vdc**		—	10	—	—
CCP2RL-3-100CF	3		600 Vac		—	20	50	40
CCP2S-2-100CF	2	Right side rotary, clockwise	600 Vac/125 Vdc**		—	10	—	—
CCP2S-3-100CF	3		600 Vac		—	20	50	40
CCP2SL-2-100CF	2	Left side rotary, counterclockwise	600 Vac/125 Vdc**		—	10	—	—
CCP2SL-3-100CF	3		600 Vac		—	20	50	40

* 125 Vdc for installed fuse amp ratings up to 40 A. 24 Vdc for installed fuse amp ratings from 45 to 60 A.
**125 Vdc for installed fuse amp ratings up to 80 A, 24 Vdc for installed fuse amp ratings from 90 to 100 A.

Box lug terminal conductor data

Wire type	AWG range	Class	Quantity	Torque N•m (lb-in)
30 and 60 A switches				
75°C Cu	4-6	Stranded, Class B to K	Single	3.95 (35)
	8-18			2.26 (20)
	6-8	Stranded, Class B/C	Dual	3.39 (30)
		Stranded, Class K		2.26 (20)
	10-18	Stranded, Class B to K		
	10-18	Solid	Single/dual	2.26 (20)
	4-18	Stranded, UL ferrule, Class B/C	Single	3.39 (30)
	6-18		Twin†	
	4-18	Stranded, UL ferrule, Class K	Single	2.82 (25)
	6-18		Twin†	
100 A switches				
75°C Cu	12-18	Stranded, Class B/C	Single	2.26 (20)
	10			2.82 (25)
	8			4.52 (40
	4-6			5.08 (45)
	1-3			6.21 (55)
	4-12		Dual	5.08 (45)
	12-18	Stranded, UL ferrule, Class B/C	Single	2.26 (20)
	10			3.95 (35)
	1-8			4.52 (40)
	10-18		Twin†	2.26 (20)
	6-9			2.82 (25)
	10-18	Solid	Single/Dual	2.26 (20)
	8-18	Class K	Single	2.26 (20)
	1-7			3.39 (30)
	3-10		Dual	5.08 (45)
	8-18	Class K, UL ferrule	Single	2.26 (20)
	1-7			3.39 (30)
	6-18		Twin	2.26 (20)

† Two stranded conductors placed in one UL Listed twin ferrule.

Lineside and loadside fork terminal

- Fork terminal suitable for line, load or accessory connection, max. 30 A suitable for use with:
  - 10-24 screw for 30 and 60 A switches
  - 1/4-28 screw for 100 A switches

Available Bussmann series fuses

UL fuse class	Type/description	Volts	Data sheet no.
CF	Indicating time-delay, Low-Peak™ CUBEFuse (6-100 A)	600 Vac/ 300 Vdc	9000
	Non-indicating time-delay, Low-Peak CUBEFuse (1-100 A)		
	Non-indicating fast-acting CUBEFuse (1-100 A)	600 Vac/dc	2147

Dimensions – mm (in)

Switch (shown with optional terminal shrouds)

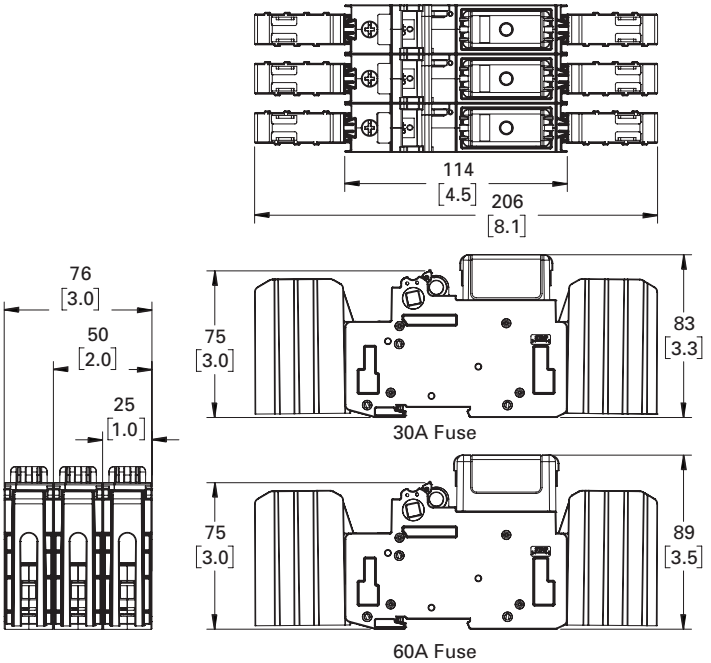

30 and 60 amp switches

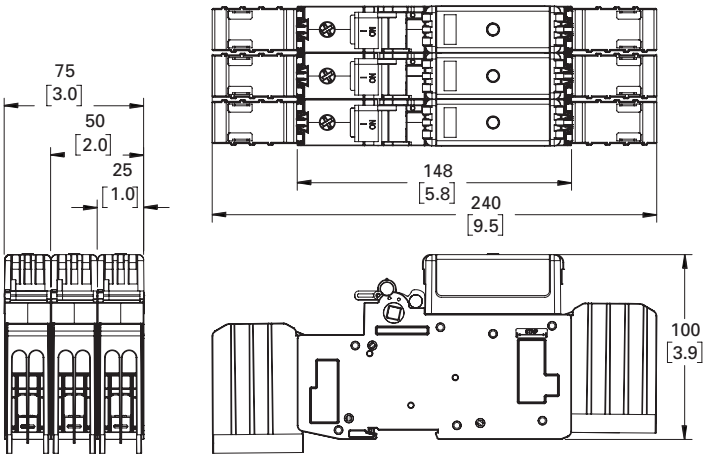

100 amp switches

Left front rotary switches (shown with optional terminal shrouds)

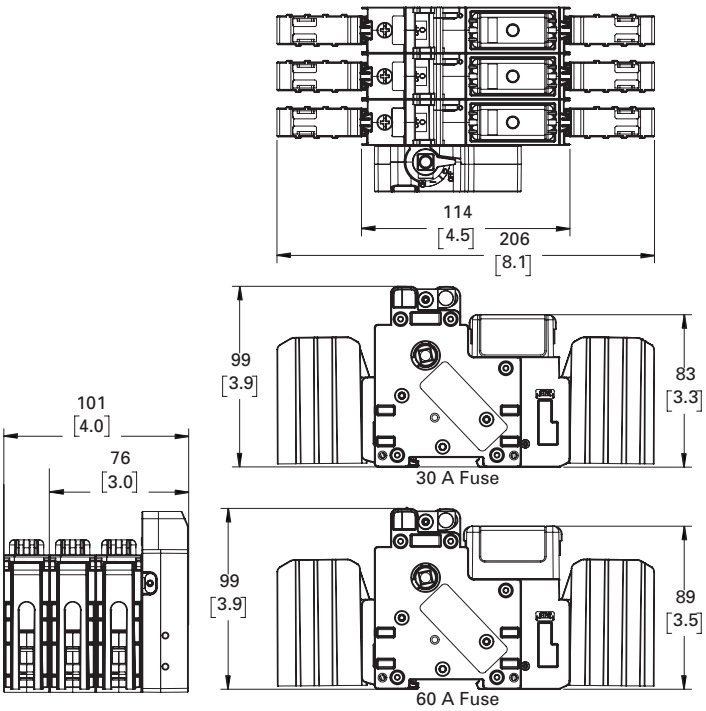

30 and 60 amp switches

Right front rotary switches (shown with optional terminal shrouds)

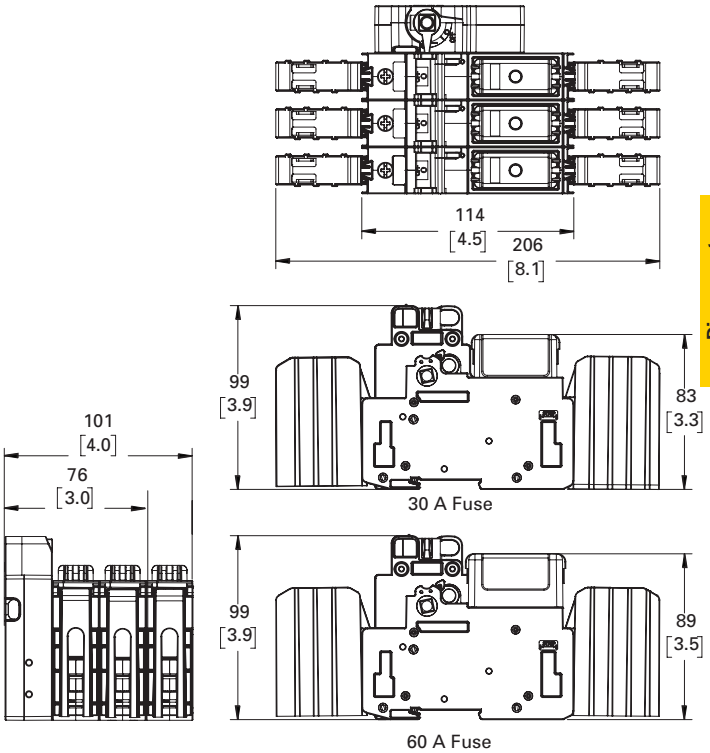

30 and 60 amp switches

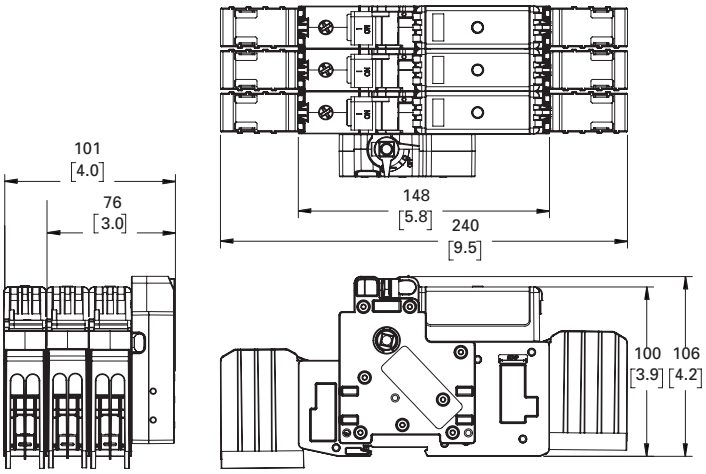

100 amp switches

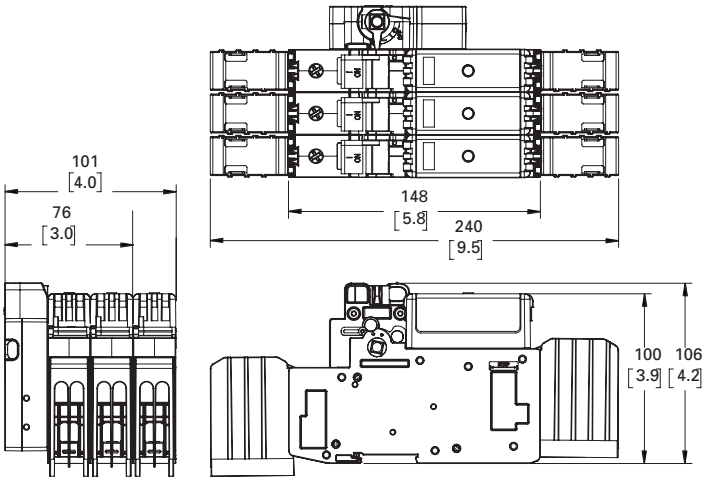

100 amp switches

Left side rotary switches (shown with optional terminal shrouds)

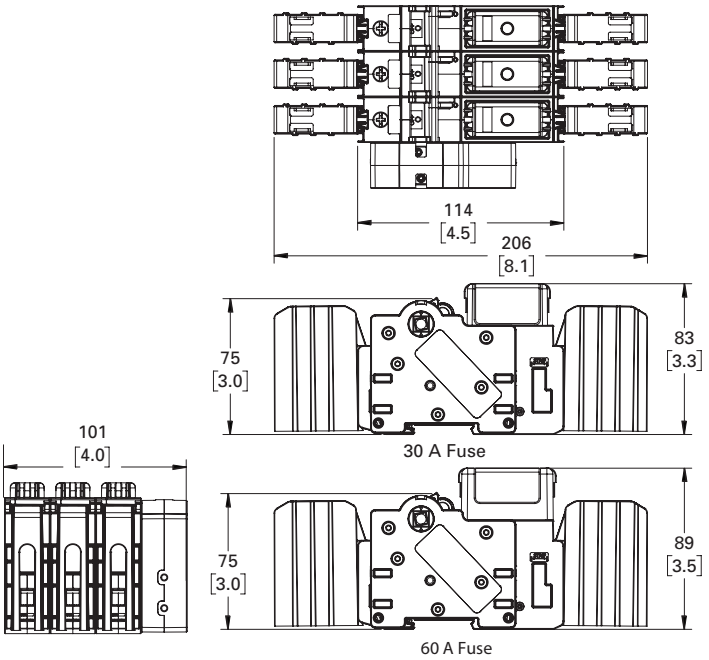

30 and 60 amp switches

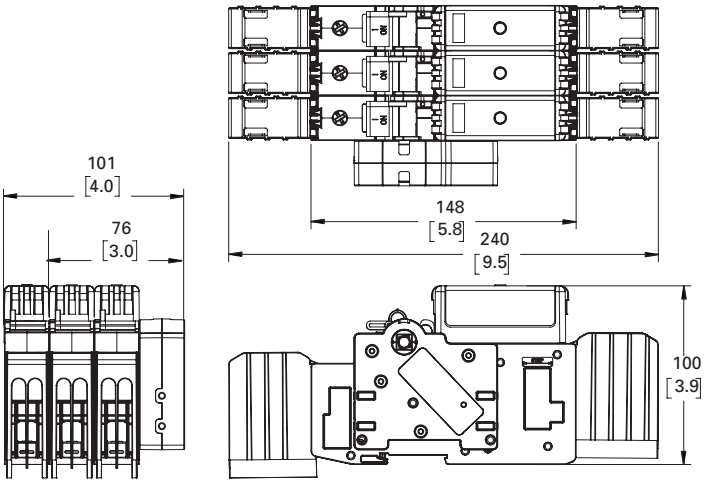

100 amp switches

Right side rotary switches (shown with optional terminal shrouds)

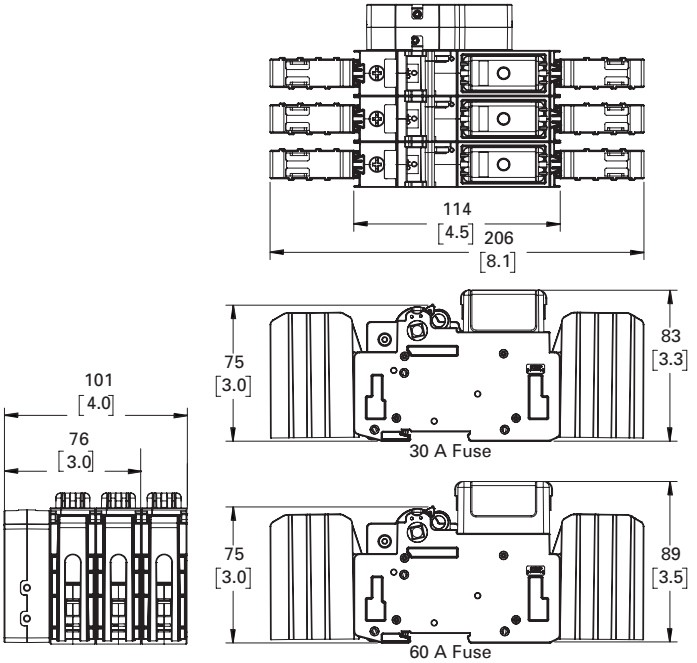

30 and 60 amp switches

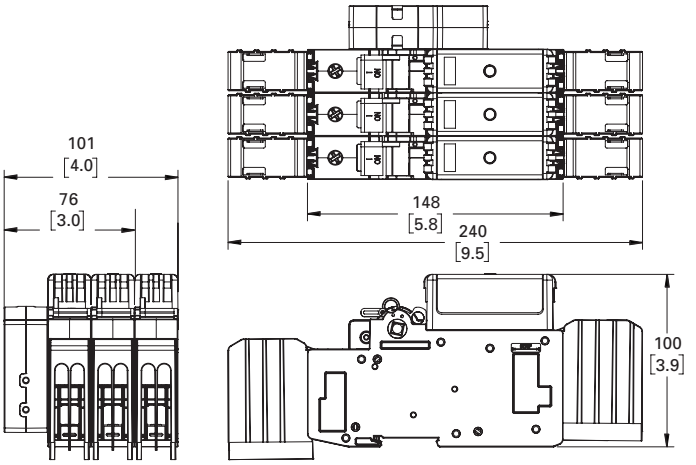

100 amp switches

200 and 400 A switches

200 A switch

400 A switch

With front rotary accessory

With side rotary accessory

Catalog no.	Poles	Amps	Description
CCP2-1-200CF	1	200	Switch only
CCP2-2-200CF	2		
CCP2-3-200CF	3		
CCP2-1-400CF	1	400	
CCP2-2-400CF	2		
CCP2-3-400CF	3		

Description

The Bussmann series 200 and 400 A Compact Circuit Protector (CCP2) fused disconnect switches utilize the finger-safe UL Class CF time-delay CUBEFuse with Class J electrical performance. With up to a 69 percent smaller footprint than a traditional fusible solution, these switches provide a high 200 kA SCCR to help improve panel and assembly SCCR.

The panel mount 200 and 400 A CCP2 switches are available with a variety of accessories to meet many application needs including rotary and flange handle operation.

Rotary operators are available for front or side (right or left) operation. Front rotary operators are for three-pole switches only while the side operator may be applied to the right or left side of 1-, 2- and 3-pole units.

Other accessories include lugs, terminal shrouds, rotary pistol handles, flange rod and cable operating mechanisms, NO/NC auxiliary contacts that easily integrate into various monitoring systems and a handle extension.

Front and side rotary operated versions are easily applied for through-the-door or through the left or right side operation to enhance safety.

Ratings

- Volts
  - 347 Vac (1-pole) 600 Vac (2- and 3-pole)
- Amps
  - 200 A
  - 400 A
- SCCR
  - 200 kA RMS Sym.

Poles

- 1-, 2- and 3-poles catalog number dependent

Agency information

- UL 98 Listed, Guide WHTY, File E302370
- cULus to Canadian Standard 22.2 No. 4-04, Guide WHTY7, File E302370
- RoHS compliant

Conductors/terminals

- See available lug table for size, type and torque information

Storage and operating temperature

- -20°C to 75°C (-4°F to 167°F)*

* For fuse performance under or above 25°C, consult fuse performance derating charts in the Bussmann Division publication no. 3002, titled Selecting Protective Devices (SPD)

Lockout/tagout provisions using 1/4" lock

- Integral with switch handle
- Front rotary operating mechanism
- Rotary pistol handles
- Flange rod and cable operators

Minimum enclosure size

- 200 A switch 16 x 12 x 6" (405 x 305 x 150 mm)
- 400 A switch 24 x 16 x 8 (610 x 405 x 200 mm)

Mounting

- Panel mount

Local open fuse indication minimum voltage

- 90 Vac, requires an open fuse to be in the CCP2 and the switch in the ON position

Accessories

- Lugs and lug kits with terminal shrouds
- Pistol handles for use with rotary operated switches
- NFPA 79 compliant handle
- 12 mm shafts for use with selector and pistol handles
- Auxiliary contacts
- Flange handle rod and cable operators

Features

- Uses UL Class CF time-delay CUBEFuse with Class J electrical performance
- Amp rating rejection feature will not accept a CUBEFuse amp ratings greater than switch rating
- High 200 kA short-circuit current rating
- Disconnect rated to provide means for load isolation
- Full voltage rated at 600 Vac
- UL 98 Listed and suitable for branch circuit disconnect and branch circuit protection with installed fuses
- Horsepower rated (see table below)
- Standard local open fuse indication light on each pole speeds troubleshooting
- Built-in switch interlock prevents inserting or removing fuse while in the ON position
- Padlockable for lockout/tagout procedures with a 1/4" lock
- Front and side rotary operator accessories provide for through-the-door and through-the-side operation flexibility and enhanced safety
- Optional pistol handles and shafts available for use with rotary operator accessories
- Multi-wire lug kits with terminal shrouds allow for power distribution to multiple loads.

Catalog numbers and horsepower ratings

Catalog no.	Poles	Description	Volts AC	SCCR	Max Hp rating (Vac) 240	480	600
200 amp switches							
CCP2-1-200CF	1	Switch only	347	200 kA	—	—	—
CCP2-2-200CF	2		600		10	—	—
CCP2-3-200CF	3				50	100	150
400 amp switches							
CCP2-1-400CF	1	Switch only	347	200 kA	—	—	—
CCP2-2-400CF	2		600		—	—	—
CCP2-3-400CF	3				100	200	250

Available lugs, conductor ratings and terminal torques

Catalog no.	Description	Lugs per cat. no.	Wire range AWG (mm²)	Wire type/ temp.	Conductor torque N•m (lb-in)	Lug mounting screw torque N•m (lb-in)
200 A switches						
CCP2-L2-1	Stainless steel lug	1	350-4 (185-25)	Cu 75°C	20.3 (180)	0.9 (8)
CCP2-L2-1A	Aluminum lug*	1	350-4 (185-25)	Cu/Al 75°C	28.2 (250)	13.5 (120)
CCP2-MW2-3	3-port multi-wire terminal with shroud*	3	2-14 (35-2.5)	Cu/Al 75°C	7.9 (70)	10.8 (95)
CCP2-MW2-6	6-port multi-wire terminal with shroud*	3	6-14 (16-2.5)	Cu/Al 75°C	2.8 (25)	10.8 (95)
* These lugs also accept 1/4" quick connect control wire terminals. Order catalog number CCP2-CWK2 (package of 12 terminals).						
400 A Switches						
CCP2-L4-1	Stainless steel lug	1	500-3 (240-35)	Cu 75°C	42.0 (375)	22.0 (200)
CCP2-L4-1A	Aluminum lug	1	500-3 (240-35)	Cu/Al 75°C	42.0 (375)	
CCP2-L4B-3	Stainless steel lug kit with shroud	3	750-500 (400-240)	Cu 75°C	57.0 (500)	
CCP2-L4B-3A	Aluminum lug kit with shroud	3	750-500 (400-240)	Cu/Al 75°C	62.0 (550)	
CCP2-L6-3	2-port stainless steel lug kit with shroud	3	(2) 500-2 (240-35)	Cu 75°C	42.0 (375)	
CCP2-L6-3A	2-port aluminum lug kit with shroud	3	(2) 500-2 (240-25)	Cu/Al 75°C	42.0 (375)	
CCP2-MW6-6	6-port multi-wire terminal with shroud	3	1/0-14 (50-2.5)	Cu/Al 75°C	10-14 = 3.9 (35) 8 = 4.5 (40) 4-6 = 5.0 (45 1/0-2 = 5.6 (50)	

Accessories

Catalog no.	Switch amps	Description
CCP2-TS2-3	200	3-pole terminal shroud
CCP2-PB2		Phase barriers (pack of 2)
CCP2-RM2		Front rotary operator* (3-pole switch only)
CCP2-TS6-3	400	3-pole terminal shroud
CCP2-PB6		Phase barriers (pack of 2)
CCP2-RM4		Front rotary operator* (3-pole switch only)
CCP2-SM	200/400	Side rotary operator* (1-, 2- or 3-pole switches)

* Complete installation requires pistol handle and shaft, order separately.

200 amp switch dimensions — mm (in)

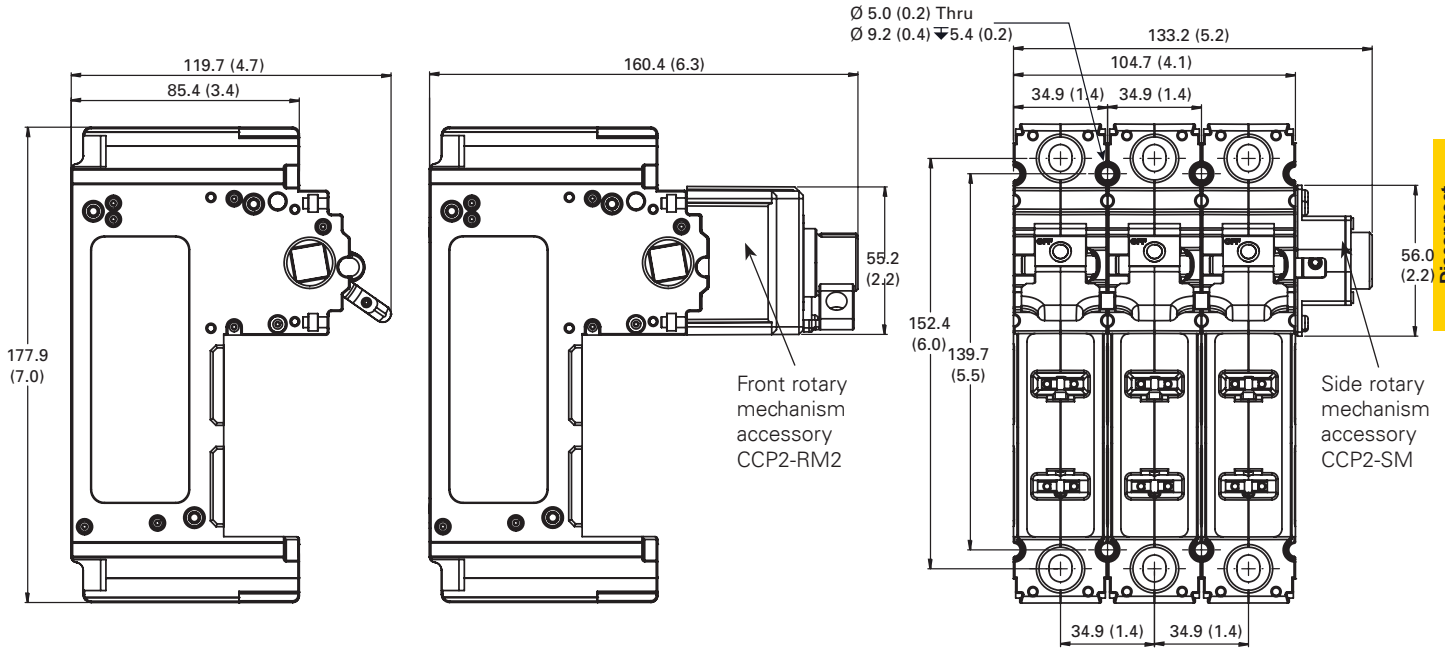

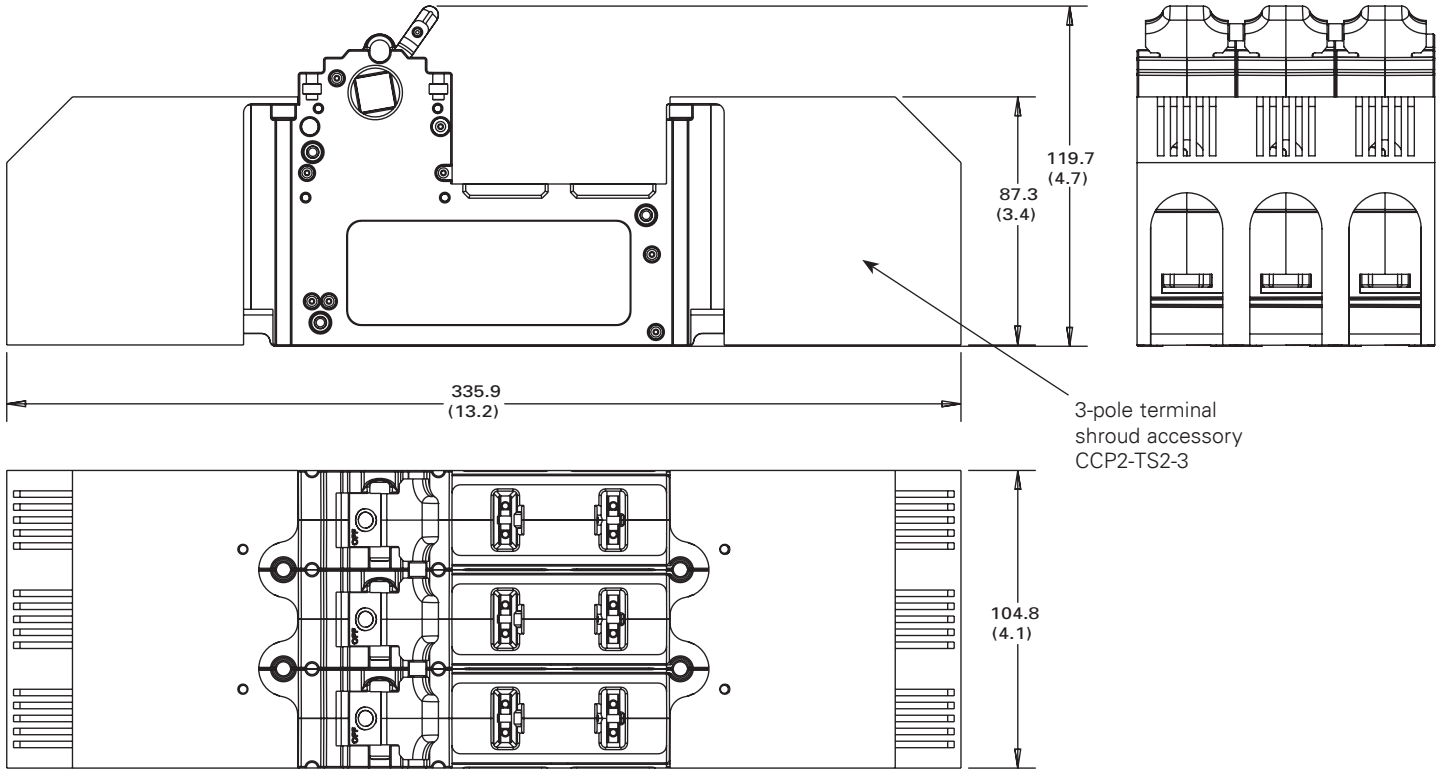

400 amp switch dimensions — mm (in)

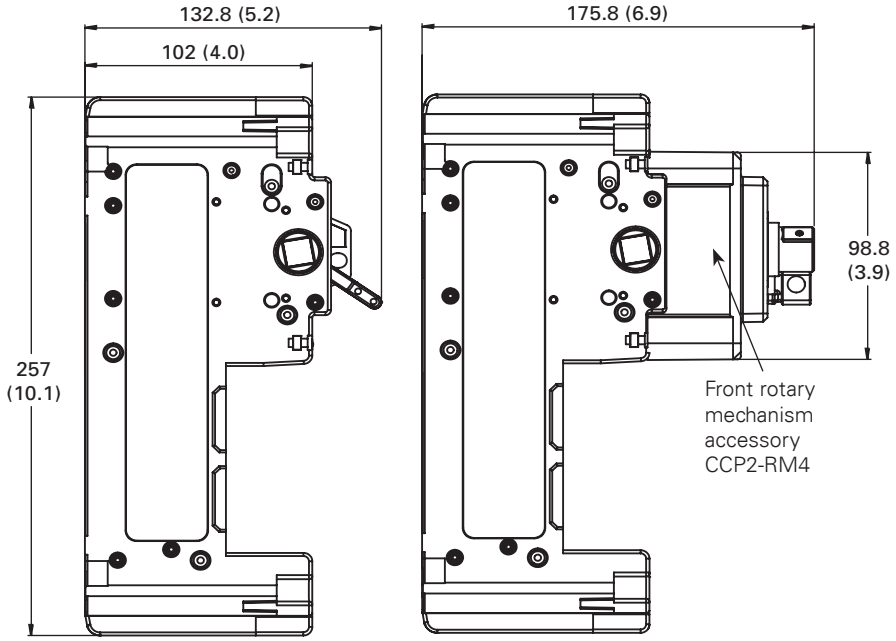

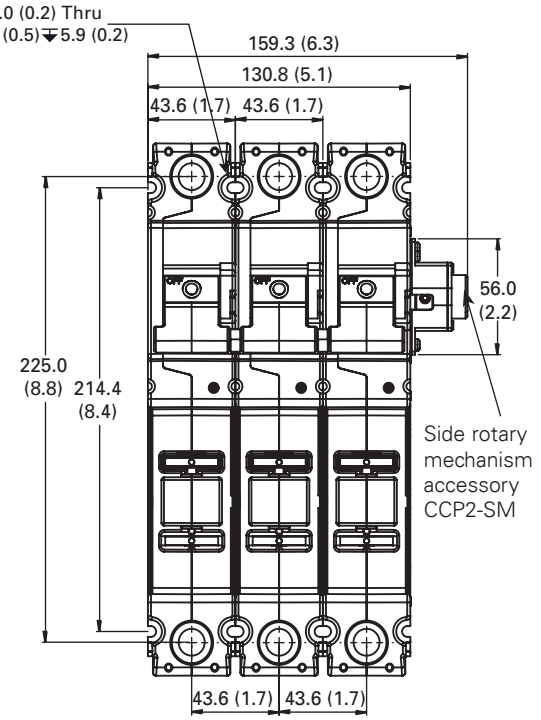

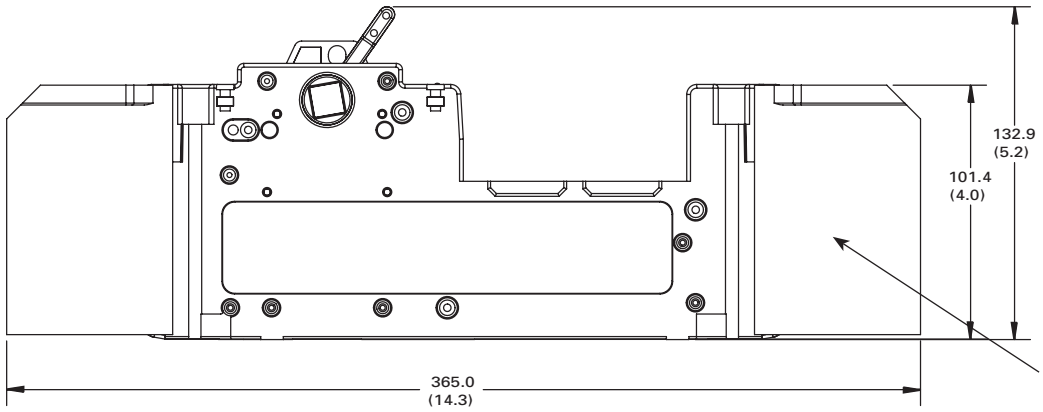

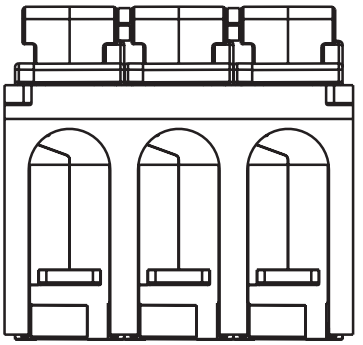

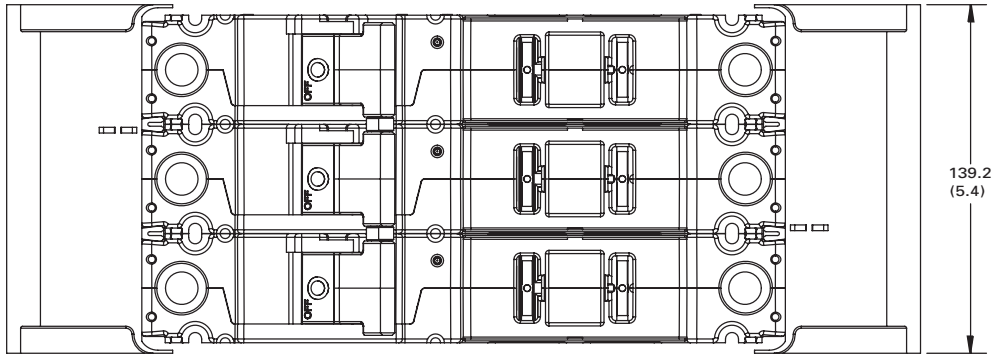

30, 60 and 100 A switch multi-wire lug kits

Catalog numbers

- CCP2-MW1-3 (30 and 60 A switches only)
- CCP2-MW1-6 (100 A switches only)

Description

The multi-wire lug kits permit expanding each box lug terminal on the switch into a three-port (30 and 60 A switches) or six-port (100 A switches) terminal for power distribution applications.

Each multi-wire lug kit comes with three lugs and three terminal shrouds. Shrouds provide finger-safe protection when properly installed.

Lugs may be mounted on either the loadside or lineside to meet various application needs.

Ports on any one lug accept any conductor combination listed, e.g., one of the ports may have dual 14 AWG wires and the other two ports single 10 AWG wires.

Ratings

- Volts 600 V
- Amps
  - 60 A max (CCP2-MW1-3)
  - 100 A max (CCP2-MW1-6)
- SCCR 200 kA

Agency information

- UL Recognized, Guide WHTY2, File E302370
- RoHS compliant

Storage and operating temperature

- -20°C to 75°C (-4°F to 167°F)

Multi-wire lug conductor information

- 75°C Cu/AL
- AWG size and quantity per port - see table below

Type	AWG range	Class	Quantity	Torque N•m (lb-in)
Cu/Al	4-6	Stranded, Class B/C	Single	3.95 (35)
	8			2.82 (25)
Cu	10-14	Stranded, Class B/C	Single/dual*	2.26 (20)
	10-14	Solid	Single	2.26 (20)
	8	UL ferrule, Class B to K	Single/twin†	2.82 (25)
	10-14			2.26 (20)

* Dual wire to be same size and type.
† Two stranded conductors placed in one UL Listed twin ferrule.

CCP2 box lug torque for multi-wire lugs

- 30/60 A switch lug, 4.52 N•m (40 lb-in)
- 100 A switch lug, 5.09 N•m (45 lb-in)

Installed on CCP2-3-xx

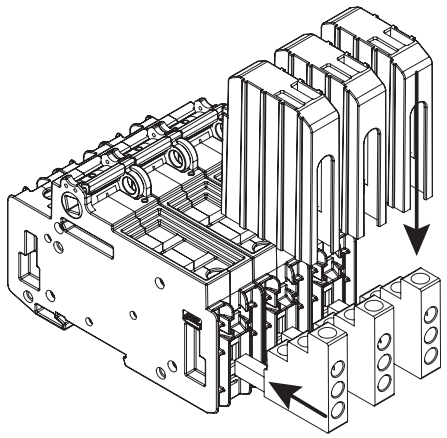

Multi-wire lugs mount in switch box lug terminals to provide three additional wire ports per pole. Lugs can be mounted on the switch lineside or loadside. Each multi-wire lug kit comes with three lugs and three shrouds.

Wire insulation strip lengths

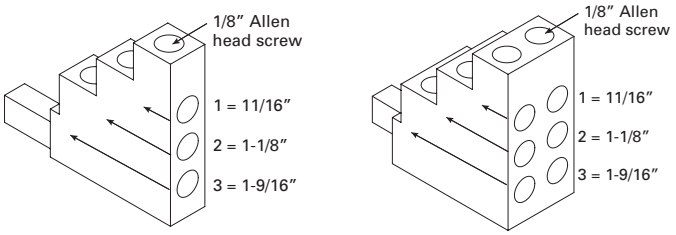

Strip back wire insulation to the lengths as indicated in the illustration above and the table below.

Lug port	Strip wire insulation back (inch)
1	11/16
2	1-1/8
3	1-9/16

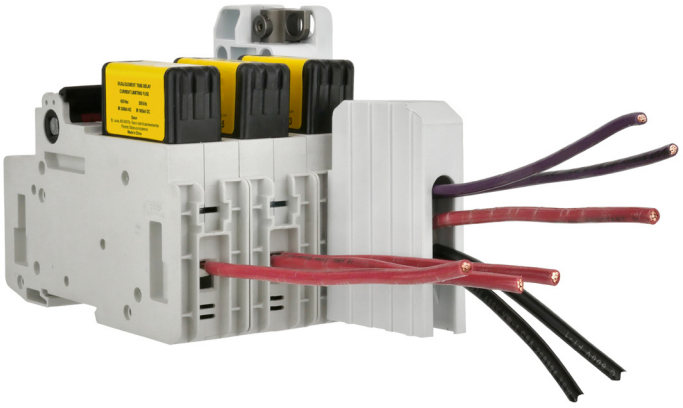

Wiring versatility is provided by single/dual rated box lug terminals on the switch, or by the three-port or six-port multi-wire lug kits that are also single/dual wire rated.

200 and 400 A switch multi-wire lug kits

Catalog numbers

- CCP2-MW2-3 (3-port, 200 A switches only)
- CCP2-MW2-6 (6-port, 200 A switches only)
- CCP2-MW6-6 (6-port, 400 A switches only)

Description

The multi-wire lug kits permit expanding the terminal on the switch into a three-port (200 A switches) or six-port (200 and 400 A switches) terminal for power distribution applications.

Each multi-wire lug kit comes with three lugs and a 3-pole terminal shroud. The shroud provides finger-safe protection when properly installed.

Lugs can only be mounted on loadside to meet application needs.

Ports on any one lug accept any conductor combination listed, e.g., one of the ports may have dual 14 AWG wires and the other two ports single 10 AWG wires.

Ratings

- Volts 600 V
- Amps
  - 225 A max (CCP2-MW2-3 and CCP2-MW2-6)
  - 600 A max (CCP2-MW6-6)
- SCCR 200 kA

Agency information

- UL Recognized, Guide WHTY2, File E302370
- RoHS compliant

Storage and operating temperature

- -20°C to 75°C (-4°F to 167°F)

Multi-wire lug conductor information

- 75°C Cu/AL
- AWG size and quantity per port - see table below

Type	AWG range	Class	Quantity	Torque N•m (lb-in)
Cu/Al	4-6	Stranded, Class B/C	Single	3.95 (35)
	8			2.82 (25)
Cu	10-14	Stranded, Class B/C	Single/dual*	2.26 (20)
	10-14	Solid	Single	2.26 (20)
	8	UL ferrule, Class B to K	Single/twin†	2.82 (25)
	10-14			2.26 (20)

* Dual wire to be same size and type.
† Two stranded conductors placed in one UL Listed twin ferrule.

Installed on CCP2-3-xx

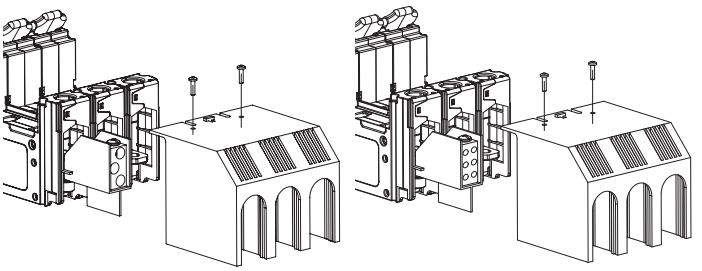

3- and 6-port multi-wire lugs mounted on 200 A switches

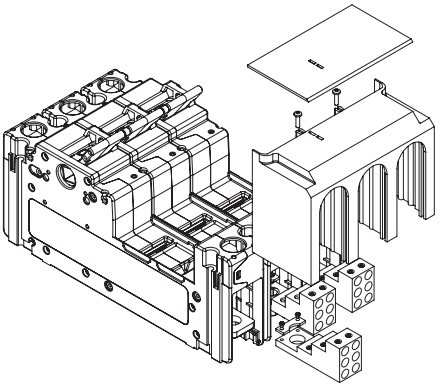

6-port multi-wire lugs mounted on 400 A switches

Multi-wire lugs mount on the switch terminals to provide three or six additional wire ports per pole. Lugs to be mounted only on the loadside. Each multi-wire lug kit comes with three lugs, a shroud and mounting hardware.

Wire insulation strip lengths

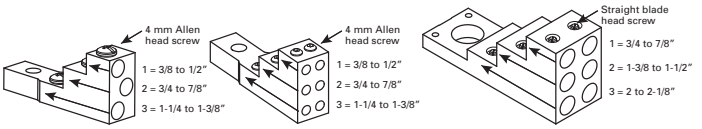

CCP2-MW2-3 CCP2-MW2-6 CCP2-MW6-6

Strip back wire insulation to the lengths indicated in the illustration above and the table below.

	Wire insulation strip length (inch)		
Lug kit	Lug port 1	Lug port 2	Lug port 3
CCP2-MW2-3	3/8 to 1/2	3/4 to 7/8	1-1/4 to 1-3/8
CCP2-MW2-6			
CCP2-MW6-6	3/4 to 7/8	1-3/8 to 1-1/2	2 to 2-1/8

Selector and pistol handles

Catalog symbol

- CCP2-H4X-_1 (selector handle for 30, 60 and 100 A switches)
- CCP2-H4X-_2 (pistol handle for 30, 60 and 100 A switches)
- CCP2-H4X-_3 (short pistol handle for 200 and 400 A switches)
- CCP2-H4X-_4 (long pistol handle for 200 and 400 A switches)

Description

Selector and pistol handles are used with rotary operated switches. Pistol handles for 200 and 400 A switches come in short and long versions. All handles are available in black/gray and red/yellow colors, and clockwise/counterclockwise operating modes. Front and right side operated switches use clockwise handles while left side operated switches use counterclockwise handles.

Installation requires an 8 mm shaft for 30, 60 and 100 A switches and a 12 mm shaft for 200 and 400 A switches (ordered separately).

Each handle is rated Type 1, 4X and 12, and accepts up to three (3) 1/4" diameter shank locks for lockout/tagout in the OFF position. They can also be field configured for lock-on and are defeatable.

Only the clockwise operating handles in combination with front rotary operating switches provide a door interlock means to ensure the enclosure door remains shut during lockout/tagout or lock-on. Rotary handles mounted on the enclosure's left or right side do NOT provide a door interlock means.

See the catalog number table below for applicable rotary switch, handle and shaft combinations.

Selector handles **Pistol handles —short and long**

Agency information

- UL Listed, Guide DIHS/DIHS7, File E140305
- Type 1, 4X and 12
- RoHS compliant
- CE

Storage and operating temperature

- -20°C to 75°C (-4°F to 167°F)

Handles and shafts for 30, 60 and 100 A switches

For catalog no.	Description/operation	Order handle cat. no.	Order either 8 mm shaft cat. no.
CCP2R-(pole)-30CF	Right front rotary, clockwise	CCP2-H4X-B1 (selector, black/grey) CCP2-H4X-R1(selector, red/yellow) CCP2-H4X-B2 (pistol, black/grey) CCP2-H4X-R2 (pistol, red/yellow)	CCP2-SH1-290 (11.5"/290 mm) CCP2-SH1-490 (19.3"/490 mm)
CCP2R-(pole)-60CF			
CCP2R-(pole)-100CF			
CCP2RL-(pole)-30CF	Left front rotary, clockwise		
CCP2RL-(pole)-60CF			
CCP2RL-(pole)-100CF			
CCP2S-(pole)-30CF	Right side rotary, clockwise		
CCP2S-(pole)-60CF			
CCP2S-(pole)-100CF			
CCP2SL-(pole)-30CF	Left side rotary, counterclockwise	CCP2-H4X-B1L (selector, black/grey) CCP2-H4X-R1L (selector, red/yellow) CCP2-H4X-B2L (pistol, black/grey) CCP2-H4X-R2L (pistol, red/yellow)	
CCP2SL-(pole)-60CF			
CCP2SL-(pole)-100CF			

Handles and shafts for 200 and 400 A switches

For catalog no.	Order front rotary mechanism cat. no.	Order right/ left side rotary mechanism cat. no.	Order front/right side clockwise handle cat. no.	Order left side counterclockwise handles (use only with CCP2-SM) cat. no.	Order either 12 mm shaft cat. no.
CCP2-(poles)-200CF	CCP2-RM2*	CCP2-SM	CCP2-H4X-B3 (short - black/grey) CCP2-H4X-R3 (short - red/yellow)	CCP2-H4X-B3L (short - black/grey) CCP2-H4X-R3L (short - red/yellow)	CCP2-SH2-225 (8.9"/225 mm)
CCP2-(poles)-400CF	CCP2-RM4*		CCP2-H4X-B4 (long - black/grey) CCP2-H4X-R4 (long - red/yellow)	CCP2-H4X-B4L (long - black/grey) CCP2-H4X-R4L (long - red/yellow)	CCP2-SH2-425 (16.7"/425 mm)

* For three-pole switches only.

Handle dimensions — mm (in)

Selector for 8 mm shafts

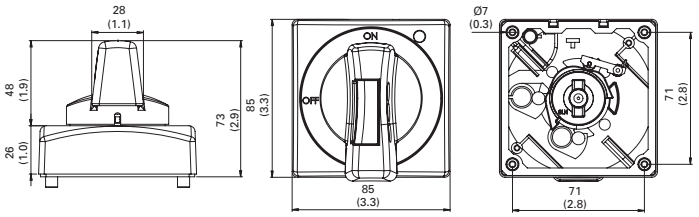

Short pistol for 8 mm and 12 mm shafts

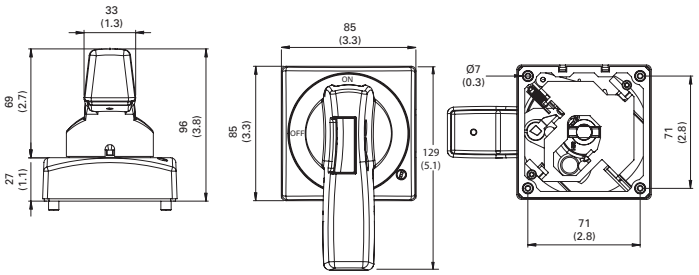

Long pistol for 12 mm shafts

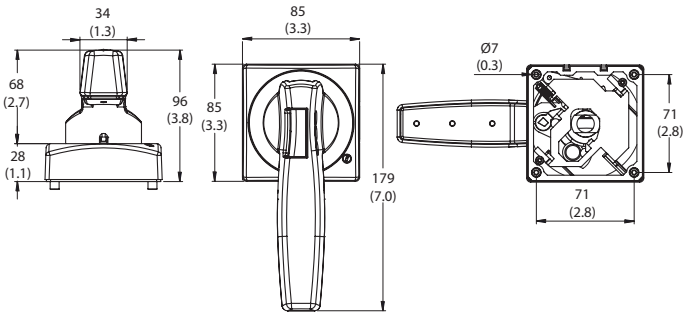

NFPA 79 compliant handles

Catalog numbers

- CCP2-NFPA-1
  (8 mm shafts for 30-100 A switches)
- CCP2-NFPA-2
  (12 mm shafts for 200 and 400 A switches)

Description

NFPA 79 handles mount on the shaft of front rotary operated switch installations and provide a lockout means independent of the door position.

Handle shafts

8 mm shafts

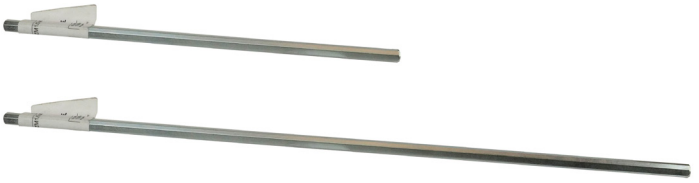

12 mm shafts

Catalog numbers

- CCP2-SH1-290 (8 mm, 290 mm long)
- CCP2-SH1-490 (8 mm, 490 mm long)
- CCP2-SH2-225 (12 mm, 225 mm long)
- CCP2-SH2-425 (12 mm, 425 mm long)

Description

Square shafts available in:

- 8 mm square by 290 and 490 mm lengths for 30, 60 and 100 A switches
- 12 mm square by 225 and 425 mm lengths for 200 and 400 A switches

All shafts are indexed to ensure handle/switch orientation for correct operation. Shafts are to be cut to length when installed.

Flange handle rod and cable operators

Catalog no.	Description	Rating
30, 60 and 100 amp switches		
CCP2-FLR1	Rod operator with painted handle	Type 1, 3R, 12
CCP2-FLR1X	Rod operator with chrome handle	Type 4X
CCP2-FLC1-36	36″ Cable with painted handle	Type 1, 3R, 12
CCP2-FLC1-36X	36″ Cable with chrome handle	Type 4X
CCP2-FLC1-60	60″ Cable with painted handle	Type 1, 3R, 12
CCP2-FLC1-60X	60″ Cable with chrome handle	Type 4X
CCP2-FLC1-120	120″ Cable with painted handle	Type 1, 3R, 12
CCP2-FLC1-120X	120″ Cable with chrome handle	Type 4X
200 and 400 amp switches		
CCP2-FLR2	Rod operator with painted handle	Type 1, 3R, 12
CCP2-FLR2X	Rod operator with chrome handle	Type 4X
CCP2-FLC2-36	36″ Cable with painted handle	Type 1, 3R, 12
CCP2-FLC2-36X	36″ Cable with chrome handle	Type 4X
CCP2-FLC2-60	60″ Cable with painted handle	1, 3R, 12
CCP2-FLC2-60X	60″ Cable with chrome handle	Type 4X
CCP2-FLC2-120	120″ Cable with painted handle	Type 1, 3R, 12
CCP2-FLC2-120X	120″ Cable with chrome handle	Type 4X

Description

Flange rod and cable operators for use on 2- and 3-pole CCP2 switches (cannot be used with 2- or 3-pole 30, 60 or 100 amp switches already having a front or side rotary operating mechanism).

Handles are available in painted versions with NEMA 1, 3R and 12 ratings or chrome versions with a NEMA 4X rating.

Cable operators are available with 36, 60 and 120 inch cable lengths.

Agency information

- Type 1, 4X and 12
- RoHS compliant

Storage and operating temperature

- -20°C to 75°C (-4°F to 167°F)

Packaging

- Each handle is packaged individually as a kit

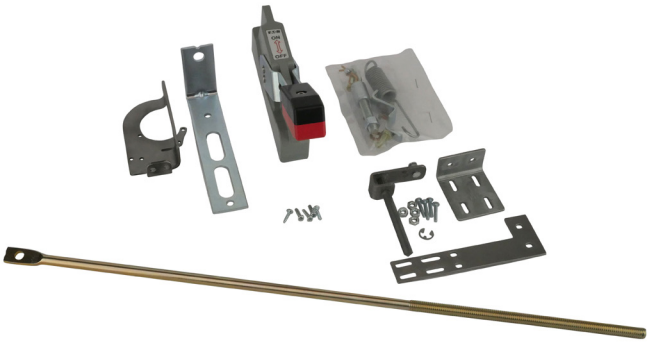

Flange rod operator kit for 30, 60 and 100 A switches.

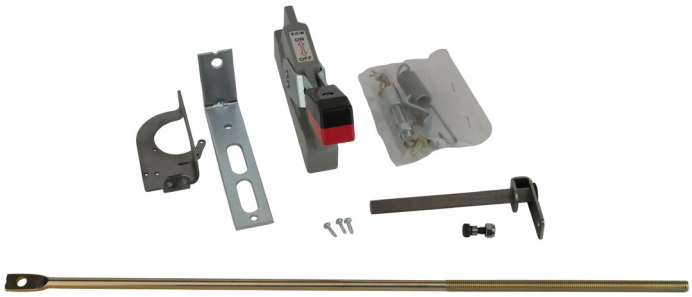

Flange rod operator kit for 200 and 400 A switches.

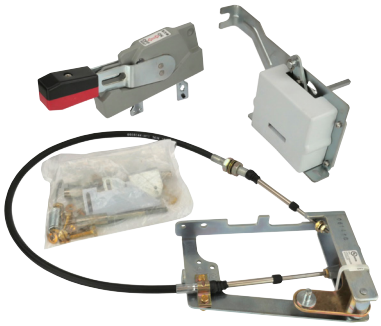

Flange cable operator kit for 30, 60 and 100 A switches.

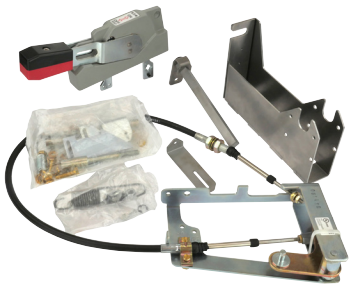

Flange cable operator kit for 200 and 400 A switches.

Front rotary mechanisms for 200 and 400 A switches

Catalog numbers

- CCP2-RM2 (3-pole 200 A switches)
- CCP2-RM4 (3-pole 400 A switches)

Description

Front rotary mechanisms for through-the-door operation and install on the front of 3-pole switches only. These units provide at-switch lockout/tagout capability for enhanced safety. Complete installation requires installing pistol handle (short or long) and 12 mm shaft.

Packaged individually.

Side rotary mechanism for 200 and 400 A switches

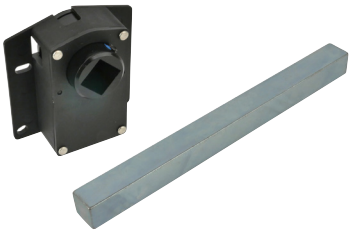

Catalog number

- CCP2-SM
  (1-, 2- or 3-pole 200 and 400 A switches)

Description

Side rotary mechanism for through-the-side operation and installs on the left or right side (right side installation recommended) of any 1-, 2- or 3-pole 200 and 400 A switch. The side rotary mechanism does not provide for door interlock nor local lockout/tagout capability. Complete installation requires installing pistol handle (short or long) and 12 mm shaft.

Packaged individually.

Terminal shrouds

Catalog numbers

- CCP2-TS2-3
  (3-pole 200 A switches)
- CCP2-TS6-3
  (3-pole 400 A switches)

Description

3-pole shroud kit with shields for isolating the lugs on 3-pole 200 and 400 A switches.

Packaged individually.

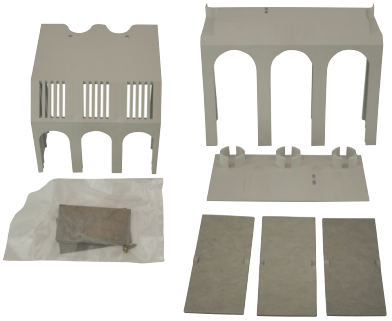

Phase barriers

Catalog numbers

- CCP2-PB2
  (3-pole 200 A switches)
- CCP2-PB6
  (3-pole 400 A switches)

Description

Phase barrier kit with two phase barriers for isolation between the lugs on 3-pole 200 and 400 A switches.

Packaged individually.

Handle extension

Catalog number

- CCP2-HEX (1-, 2- and 3-pole 200 and 400 A switches)

Description

A handle extension to provide additional leverage for operating the switch in installations that do not have rotary mechanisms or flange operators installed. Does not mount on switch, provision for tether provided.

Packaged individually.

Auxiliary contacts for 30, 60 and 100 A switches

Catalog numbers

- CCP2-AUX (30 and 60 A switches)
- CCP2-AUX-100 (100 A switches)

Description

NO+NC contact output to indicate the switching mechanism status on the CCP2. A single unit can be mounted on any 1-, 2- or 3-pole CUBEFuse CCP2 switch and the left front/left side rotary operated switches.

Ratings

- 240 Vac max
- 5 A max
- NC/NO contacts are closed/open when the CCP2 switch is in the "ON" position (closed)

Catalog no.	Switch	Description	Max per CCP2*	Ratings
CCP2-AUX	30/60 A only	Auxiliary contacts N/NC for switch status	1 per CCP2 (1-, 2- or 3-pole)	5 A / 240 Vac
CCP2-AUX-100	100 A only			

* The CCP2-AUX CANNOT be mounted on the right front and right side rotary operated versions, nor installed with the flange handle rod or cable operator. De-energize all circuits and follow all prescribed safety procedures before installing or removing the auxiliary contact device.

Agency information

- UL 98 Recognized, Guide WHTY2, File E155130
- cURus to Canadian Standard 22.2 No. 4-04
- Finger-safe in installed state
- RoHS compliant
- CE

Wiring

- 16-20 AWG (1.5 to 0.5 mm²) single and dual stranded wire
- 20 AWG (1.5 mm²) single and dual solid wire
- Torque 0.56 N•m (5 lb-in)
- Use only 75°C Cu wire

Packaging

- CCP2-AUX and CCP2-AUX-100 are packaged individually

Installation technique

- Mounts on the CCP2's right side ONLY and mechanically interlocks with the CCP2 switch handle with provided hardware. The CCP2-AUX and CCP2-AUX-100 CANNOT be mounted on the right front and right side rotary operated versions, nor installed with the flange handle rod or cable operator.

Storage and operating temperature

- -20°C to 75°C (-4°F to 167°F)

Installed on a CCP2-3-xx

Note: CCP2-AUX and CCP2-AUX-100 **CANNOT** be mounted on the right front and right side rotary operated versions, nor installed with the flange handle rod or cable operator.

Dimensions — in

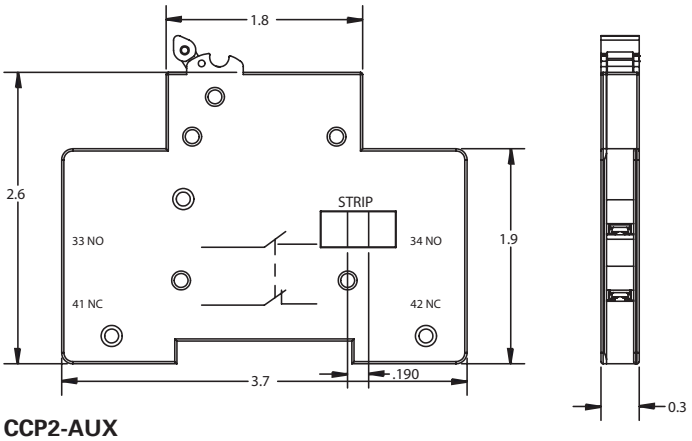

CCP2-AUX

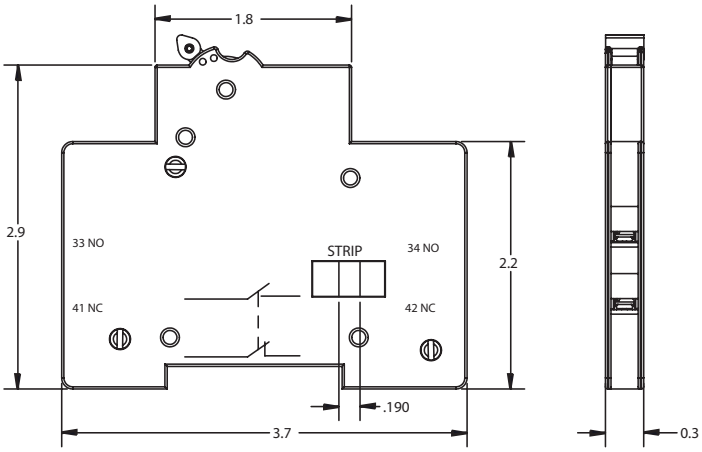

CCP2-AUX-100

Auxiliary contacts for 200 and 400 A switches

Catalog number

- CCP2-AUX-S (200 and 400 A switches)

Description

NO+NC contact output to indicate the switching mechanism status on the CCP2. A single unit can be mounted on either side of any 1-, 2- or 3-pole switch (cannot be mounted on the same side as the CCP2-SM side rotary mechanism or the right side if a flange handle rod or cable operator is installed).

Ratings

- 240 Vac max
- 5 A max
- NC/NO contacts are closed/open when the CCP2 switch is in the "ON" position (closed)

Catalog no.	Switch	Description	Max per CCP2*	Ratings
CCP2-AUX-S	200 and 400 A	Auxiliary contacts NO+NC for switch status	1 per CCP2 (1-, 2- or 3-pole)	5 A / 240 Vac

* The CCP2-AUX-S CANNOT be mounted on the same side where the side rotary mechanism (CCP2-SM) is installed.
De-energize all circuits and follow all prescribed safety procedures before installing or removing the auxiliary contact device.

Agency information

- UL 98 Recognized, Guide WHTY2, File E155130
- cURus to Canadian Standard 22.2 No. 4-04
- Finger-safe in installed state
- RoHS compliant

Wiring

- 16-20 AWG (1.5 to 0.5 mm^2) single and dual stranded wire
- 20 AWG (1.5 mm^2) single and dual solid wire
- Torque 0.56 N•m (5 lb-in)
- Use only 75°C Cu wire

Installation technique

- Mounts on either side of the 200 and 400 A switches and mechanically interlocks with the switch's handle with provided hardware. The CCP2-AUX-S CANNOT be mounted on the same side with an installed CCP2-SM side rotary mechanism, or the flange cable/rod operating mechanisms.

Storage and operating temperature

- -20°C to 75°C (-4°F to 167°F)

Packaging

- Packaged individually.

Installed on a CCP2-3-xx

Note: CCP2-AUX-S **CANNOT** be mounted on the same side as the side rotary mechanism CCP2-SM or the right side if a flange handle rod or cable operator is installed.

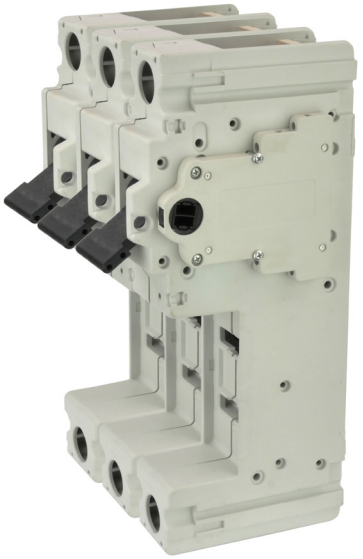

PLC fuse monitor for 30, 60 and 100 A switches

Catalog numbers

- CCP2-PLC-IND (30/60 A switches)
- CCP2-PLC-100 (100 A switches)

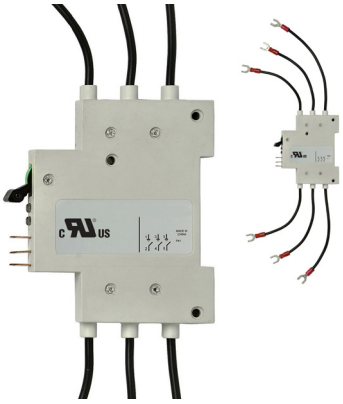

Description

A resettable three-phase fuse monitor that integrates with the I/O card in a Programmable Logic Controller (PLC). A single unit can be mounted on any 1-, 2- or 3-pole CUBEFuse CCP2 switch up to 100 A and the left front/ left side rotary operated switches.
A single unit monitors up to three phases. When used on 1- and 2-pole switches unused conductor(s) are removed after installation. The CCP2-PLC-IND and CCP2-PLC-100 **CANNOT** be mounted on the left front/left side rotary operated versions or if a multi-wire lug kit is installed or if a multi-wire lug kit is installed, or if the flange handle rod operator is installed.

Ratings

- Signal output to PLC*
  - +24 Vdc, 10 mA max
- Output signals
  - Digital 0 Vdc (low), 24 Vdc max (high)
  - 0 Vdc Low – fuse is good
  - 24 Vdc High – fuse has opened

* When the fuse opens, the output signal is sent high and will remain high until the unit is reset.

Emissions and immunity testing

- IEC 60947-1: Voltage Switchgear and Control Gear
- IEC 61000-6-2: Electromagnetic Compatibility (EMC)
  - IEC 61000-4-2: Electrostatic Discharge Immunity - Test at level 3 (6 kV-Contact Discharge) and level 2 (4 kV-Air Discharge)
  - IEC 61000-4-3: Electromagnetic Compatibility - Radiated, Radio-frequency, Electromagnetic Field Immunity test at level x (20 V/m)
  - IEC 61000-4-4: Electromagnetic Compatibility - Testing and Measurement Techniques at level 3 (± 2kV - Power Port and ±1 kV - I/O Ports)
  - IEC 61000-4-5: Electromagnetic Compatibility - Surge Immunity test at level 4 (±4 kV)
  - IEC 61000-4-6: Immunity to Conducted Disturbances at level 3 (10 V)

Catalog no.	Switch	Description	Max per CCP2**	Signal output to PLC	Min. circuit volts
CCP2-PLC-IND	30/60 A only	Wired remote fuse indication for PLC applications	1 per CCP2 (1, 2- or 3-pole)	24 Vdc/ 10 mA	100 Vac
CCP2-PLC-100	100 A only				

**The CCP2-PLC-IND and CCP2-PLC-100 CANNOT be mounted on the left front/ left side rotary operated versions or if a multi-wire lug kit is installed.

De-energize all circuits and follow all prescribed safety procedures before installing or removing the CCP2-PLC-IND or CCP2-PLC-100.

Agency information

- UL 98 Recognized, Guide WHTY2, File E155130
- cURus to Canadian Standard 22.2 No. 4-04

Local indication

- Two distinct LEDs indicate unit power (green) and open fuse (red). Open fuse LED is resettable upon fuse replacement and the actuating the reset switch

Wiring

- For power, signal and ground connections use shielded twisted pair 22-24 AWG (0.34-0.25 mm^2) 300 V rated wire

Installation technique

- Mounts on the left side ONLY of the CCP2 and mechanically interlocks with the CCP2 switch handle with hardware provided. The CCP2-PLC-IND and CCP2-PLC-100 **CANNOT** be mounted on the left front/left side rotary operated versions or if a multi-wire lug kit is installed or if the flange handle rod operator is installed.

IP20 rating — yes

Storage and operating temperature

- -20°C to 75°C (-4°F to 167°F)

PLC programming

- The CCP2-PLC-IND or CCP2-PLC-100 signal line is designed to provide a digital input to a PLC I/O card. In this case, a Programmable Logic Control program must be written to properly interpret the input signal to the PLC. The PLC program should check for consecutive high signals before taking action on a critical process.

Installed on a CCP2-3-xx

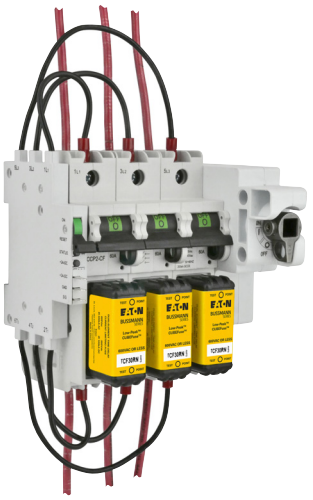

CCP2-PLC-IND mounted on a 3-pole switch and using the fork terminals. When mounted on a 2- or 1-pole switch, remove unused leads.

Note: the CCP2-PLC-IND **CANNOT** be mounted on the left front/left side rotary operated versions or if the multi-wire lug kit is installed or if the flange handle rod operator is installed.

PLC wiring schematic

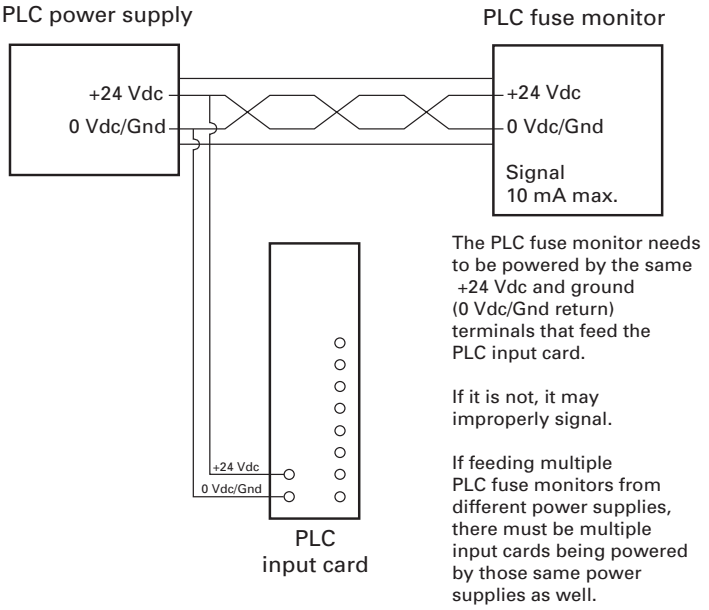

The PLC fuse monitor needs to be powered by the same +24 Vdc and ground (0 Vdc/Gnd return) terminals that feed the PLC input card.

If it is not, it may improperly signal.

If feeding multiple PLC fuse monitors from different power supplies, there must be multiple input cards being powered by those same power supplies as well.

Dimensions — in

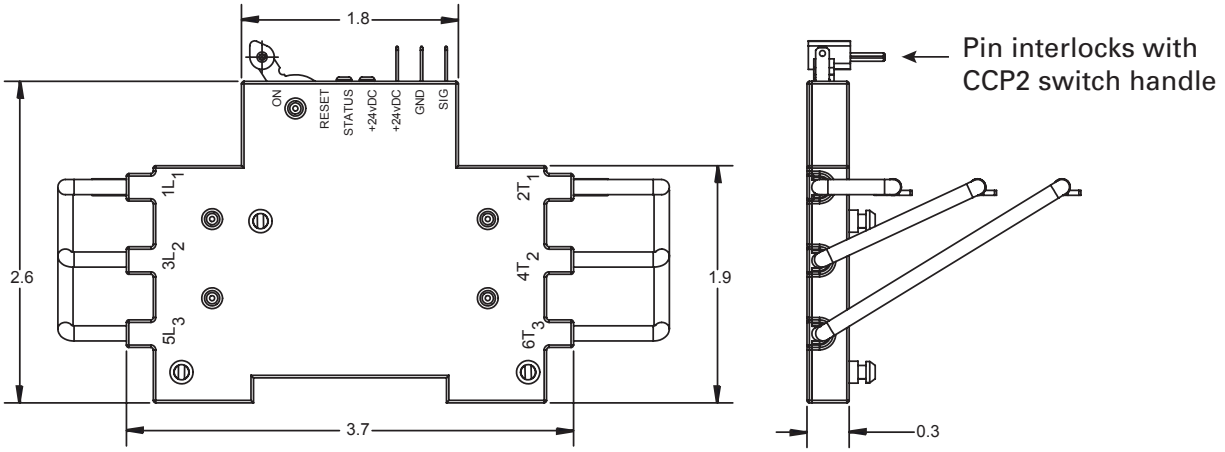

30 and 60 A CCP

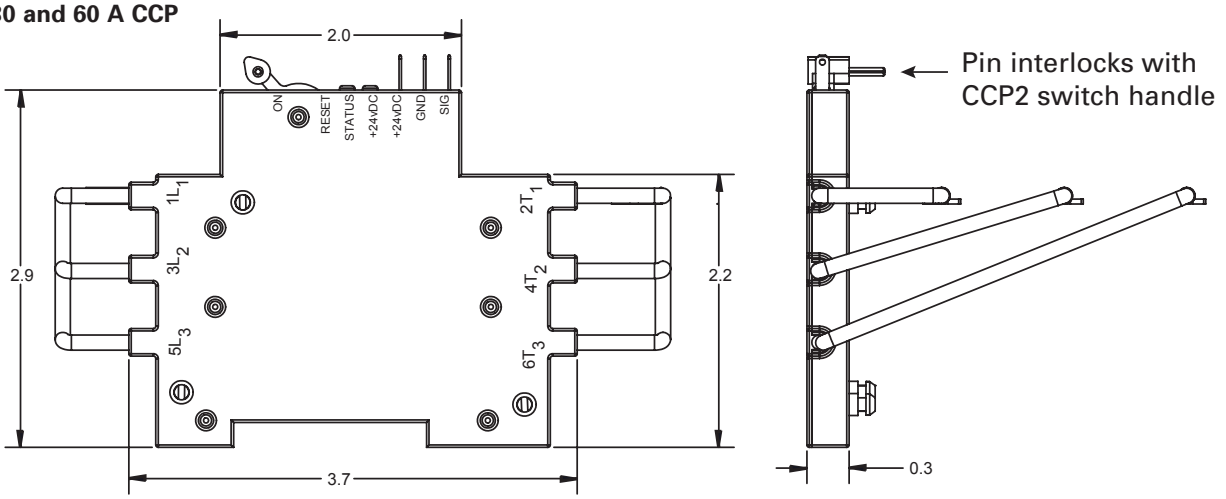

100 A CCP

Ordering a complete switch installation

30 and 60 A CCP2 switches

For a complete assembly, select from the following required and optional components, and accessories.

		Catalog no.		
Required		**Switches**	**Amps**	**Poles**
		Switch (used alone or with flange cable or flange rod handles)		
		CCP2-1-30CF	30	1
		CCP2-2-30CF		2
		CCP2-3-30CF		3
		CCP2-1-60CF	60	1
		CCP2-2-60CF		2
		CCP2-3-60CF		3
		And		
Optional		**Flange handle rod operator**	**Description — 3-pole switches only**	**Rating**
		CCP2-FLR1-21	Red/black painted handle	1, 3R and 12
		CCP2-FLR1-21X	Chrome handle	4X
	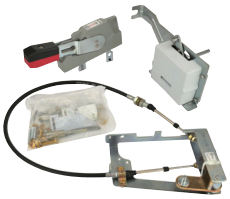	**Or**		
		Flange handle cable operator	**Description - 3-pole switches only, cannot be used with side or front rotary mechanisms**	**Rating**
		CCP2-FLC1-36	36″ cable, red/black painted handle	Type 1, 3R, 12
		CCP2-FLC1-36X	36″ cable, chrome handle	Type 4X
		CCP2-FLC1-60	60″ cable, red/black painted handle	Type 1, 3R, 12
		CCP2-FLC1-60X	60″ cable, chrome handle	Type 4X
		CCP2-FLC1-120	120″ cable, red/black painted handle	Type 1, 3R, 12
		CCP2-FLC1-120X	120″ cable, chrome handle	Type 4X
		Multi-wire lug kits	**Description**	
		CCP2-MW1-3	3-port multi-wire, 75°C Cu/Al, 6-14, includes terminal shrouds, pack of 3	
		And		
Accessories		**Terminal shrouds**	**Description**	
		CCP2-TS1-3	Pack of 3	
		Auxiliary contacts	**Description — mounts on right side, cannot be used with flange handle rod or cable operator**	
		CCP2-AUX	NO/NC, 5 A / 240 V	
		PLC fuse monitor	**Description — mounts on left side, cannot be used with flange handle rod operator**	
		CCP2-PLC-IND	Signal output 24 Vdc / 10 mA	

Ordering a complete switch installation

30 and 60 A CCP2 clockwise rotary switches

For a complete assembly, select from the following required and optional components, and accessories.

		Catalog no.		
Required		**Switches**	**Amps**	**Poles**
		Right front rotary		
		CCP2R-2-30CF	30	2
		CCP2R-3-30CF		3
		CCP2R-2-60CF	60	2
		CCP2R-3-60CF		3
		Left front rotary		
		CCP2RL-2-30CF	30	2
		CCP2RL-3-30CF		3
		CCP2RL-2-60CF	60	2
		CCP2RL-3-60CF		3
		Right side rotary		
		CCP2S-2-30CF	30	2
		CCP2S-3-30CF		3
		CCP2S-2-60CF	60	2
		CCP2S-3-60CF		3
		And		
		Rotary handles	**Description**	**Rating**
		CCP2-H4X-B1	Selector handle — black/grey	Type 1, 4X, 12
		CCP2-H4X-R1	Selector handle — red/yellow	
		CCP2-H4X-B2	Pistol handle — black/grey	
		CCP2-H4X-R2	Pistol handle — red/yellow	
		And		
		Shafts (8 mm)	**Length**	
		CCP2-SH1-290	290 mm	
		CCP2-SH1-490	490 mm	
		NFPA 79 compliant handle	**Color**	
		CCP2-NFPA-1	Red	
And				
Optional		**Multi-wire lug kits**	**Description**	
		CCP2-MW1-3	3-port multi-wire, 75°C Cu/Al, 6-14, includes terminal shrouds, pack of 3	

And			
Accessories		**Terminal shrouds**	**Description**
		CCP2-TS1-3	Pack of 3
		Auxiliary contacts	**Description — use with CCP2RL-(poles)-30/60CF switches**
		CCP2-AUX	NO/NC, 5 A / 240 V
		PLC fuse monitor	**Description — use with CCP2R-(poles)-30/60CF and CCP2S-(poles)-30/60CF switches**
		CCP2-PLC-IND	Signal output 24 Vdc / 10 mA

Ordering a complete switch installation

30 and 60 A CCP2 counterclockwise switches

For a complete assembly, select from the following required and optional components, and accessories.

Required		**Catalog no.**		
		Switches	**Amps**	**Poles**
		Left side rotary		
		CCP2SL-2-30CF	30	2
		CCP2SL-3-30CF		3
		CCP2SL-2-60CF	60	2
		CCP2SL-3-60CF		3
		And		
		Rotary handles	**Description**	**Rating**
		CCP2-H4X-B1L	Selector handle — black/grey	Type 1, 4X, 12
		CCP2-H4X-R1L	Selector handle — red/yellow	
		CCP2-H4X-B2L	Pistol handle — black/grey	
		CCP2-H4X-R2L	Pistol handle — red/yellow	
		And		
		Shafts (8 mm)	**Length**	
		CCP2-SH1-290	290 mm	
		CCP2-SH1-490	490 mm	
		NFPA 79 compliant handle	**Color**	
		CCP2-NFPA-1	Red	
And				
Optional		**Multi-wire lug kits**	**Description**	
		CCP2-MW1-3	3-port multi-wire, 75°C Cu/Al, 6-14, includes terminal shrouds, pack of 3	
And				
Accessories		**Terminal shrouds**	**Description**	
		CCP2-TS1-3	Pack of 3	
		Auxiliary contacts	**Description —mounts on right side**	
		CCP2-AUX	NO/NC, 5 A / 240 V	

Ordering a complete switch installation

100 A CCP2 switches

For a complete assembly, select from the following required and optional components, and accessories.

		Catalog no.		
		Switches	**Amps**	**Poles**
		Switch (used alone or with flange cable or flange rod handles)		
Required		CCP2-1-100CF	100	1
		CCP2-2-100CF		2
		CCP2-3-100CF		3
		And		
Optional		**Flange handle rod operator**	**Description — 3-pole switches only**	**Rating**
		CCP2-FLR1-21	Red/black painted handle	1, 3R and 12
		CCP2-FLR1-21X	Chrome handle	4X
	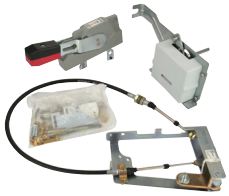	**Or**		
		Flange handle cable operator	**Description - 3-pole switches only, cannot be used with side or front rotary mechanisms**	**Rating**
		CCP2-FLC1-36	36″ cable, red/black painted handle	Type 1, 3R, 12
		CCP2-FLC1-36X	36″ cable, chrome handle	Type 4X
		CCP2-FLC1-60	60″ cable, red/black painted handle	Type 1, 3R, 12
		CCP2-FLC1-60X	60″ cable, chrome handle	Type 4X
		CCP2-FLC1-120	120″ cable, red/black painted handle	Type 1, 3R, 12
		CCP2-FLC1-120X	120″ cable, chrome handle	Type 4X
		Multi-wire lug kits	**Description**	
		CCP2-MW1-6	6-port multi-wire, 75°C Cu/Al, 6-14, includes terminal shrouds, pack of 3	
		And		
Accessories		**Terminal shrouds**	**Description**	
		CCP2-TS1-6	Pack of 3	
		Auxiliary contacts	**Description — mounts on right side, cannot be used with flange handle rod or cable operator**	
		CCP2-AUX-100	NO/NC, 5 A / 240 V	
		PLC fuse monitor	**Description — mounts on left side, cannot be used with flange handle rod operator**	
		CCP2-PLC-100	Signal output 24 Vdc / 10 mA	

Ordering a complete switch installation

100 A CCP2 clockwise rotary switches

For a complete assembly, select from the following required and optional components, and accessories.

		Catalog no.		
		Switches	**Amps**	**Poles**
Required		**Right front rotary**		
		CCP2R-2-100CF	100	2
		CCP2R-3-100CF		3
		Left front rotary		
		CCP2RL-2-100CF	100	2
		CCP2RL-3-100CF		3
		Right side rotary		
		CCP2S-2-100CF	100	2
		CCP2S-3-100CF		3
		And		
		Rotary handles	**Description**	**Rating**
		CCP2-H4X-B1	Selector handle — black/grey	Type 1, 4X, 12
		CCP2-H4X-R1	Selector handle — red/yellow	
		CCP2-H4X-B2	Pistol handle — black/grey	
		CCP2-H4X-R2	Pistol handle — red/yellow	
		And		
		Shafts (8 mm)	**Length**	
		CCP2-SH1-290	290 mm	
		CCP2-SH1-490	490 mm	
		NFPA 79 compliant handle	**Color**	
		CCP2-NFPA-1	Red	
And				
Optional		**Multi-wire lug kits**	**Description**	
		CCP2-MW1-6	6-port multi-wire, 75°C Cu/Al, 6-14, includes terminal shrouds, pack of 3	

And			
Accessories		**Terminal shrouds**	**Description**
		CCP2-TS1-6	Pack of 3
		Auxiliary contacts	**Description — cannot be used on right front or right side operated switches**
		CCP2-AUX-100	NO/NC, 5 A / 240 V
		PLC fuse monitor	**Description — Cannot be used on left front or left side operated switches**
		CCP2-PLC-100	Signal output 24 Vdc / 10 mA

Ordering a complete switch installation

100 A CCP2 counterclockwise switches

For a complete assembly, select from the following required and optional components, and accessories.

Required		**Catalog no.**		
		Switches	**Amps**	**Poles**
		Left side rotary		
		CCP2SL-2-100CF	100	2
		CCP2SL-3-100CF		3
		And		
		Rotary handles	**Description**	**Rating**
		CCP2-H4X-B1L	Selector handle — black/grey	Type 1, 4X, 12
		CCP2-H4X-R1L	Selector handle — red/yellow	
		CCP2-H4X-B2L	Pistol handle — black/grey	
		CCP2-H4X-R2L	Pistol handle — red/yellow	
		And		
		Shafts (8 mm)	**Length**	
		CCP2-SH1-290	290 mm	
		CCP2-SH1-490	490 mm	
		NFPA 79 compliant handle	**Color**	
		CCP2-NFPA-1	Red	
And				
Optional		**Multi-wire lug kits**	**Description**	
		CCP2-MW1-6	6-port multi-wire, 75°C Cu/Al, 6-14, includes terminal shrouds, pack of 3	
And				
Accessories		**Terminal shrouds**	**Description**	
		CCP2-TS1-6	Pack of 3	
		Auxiliary contacts	**Description — mounts on right side**	
		CCP2-AUX-100	NO/NC, 5 A / 240 V	

About the UL Class CF CUBEFuse

The Bussmann series Low-Peak CUBEFuse is a UL Class CF current-limiting, dual-element, time-delay branch circuit fuse with Class J electrical performance. Available in indicating and non-indicating versions, this finger-safe fuse has a very compact, space-saving size and is easily applied using the CUBEFuse holder (TCFH_N), UL 98 Compact Circuit Protector switch (CCP2-_CF) or Compact Circuit Protector Base (CCP2B up to 100 A) used in the Quik-Spec Coordination Panelboard).

Ratings

- Volts
  - 600 Vac
  - 300 Vdc
- Amps
  - 6-400 A (indicating)
  - 1-400 A (non-indicating)
- Interrupting rating
  - 300 kA RMS Sym. (Up to 100 A UL)
  - 200 kA RMS Sym. (110 to 400 A UL)
  - 200 kA RMS Sym. (Up to 100 A CSA)
  - 100 kA DC (Up to 400 A UL and up to 100 A CSA)

Agency information

- UL Listed Class CF fuse: Guide JDDZ, File E4273 (up to 400 A)
- CSA® Certified fuse: Class 1422-02, File 053787_C_000 (up to 100 A)
- CE
- RoHS compliant

Catalog numbers (amps)

Indicating CUBEFuse				
TCF6	TCF30	TCF70	TCF150	TCF350
TCF10	TCF35	TCF80	TCF175	TCF400
TCF15	TCF40	TCF90	TCF200	
TCF17-1/2	TCF45	TCF100	TCF225	
TCF20	TCF50	TCF110	TCF250	
TCF25	TCF60	TCF125	TCF300	
Non-Indicating CUBEFuse				
TCF1RN	TCF20RN	TCF50RN	TCF110RN	TCF250RN
TCF3RN	TCF25RN	TCF60RN	TCF125RN	TCF300RN
TCF6RN	TCF30RN	TCF70RN	TCF150RN	TCF350RN
TCF10RN	TCF35RN	TCF80RN	TCF175RN	TCF400RN
TCF15RN	TCF40RN	TCF90RN	TCF200RN	
TCF17-1/2RN	TCF45RN	TCF100RN	TCF225RN	

Features

- Smallest installed footprint of any UL Class CC, J, or R fuse solution
- Easy application using CUBEFuse holders (TCFH_N), UL 98 Compact Circuit Protector (CCP2) switches and Compact Circuit Protector Base (CCP2B up to 100 A). See data sheet 9007 for details on the CUBEFuse holder, 10801 for details on the CCP2-_CF switch and 1161 for the CCP2B.
- Holders and switches have an amp rating rejection feature to help prevent overfusing; 30, 60 and 100 A switches and holders will hold any CUBEFuse up to its rating, 200 and 400 A switches and 200, 225 and 400 A holders will hold any CUBEFuse 110 A and above up to its rating
- UL Class CF with Class J time-delay electrical performance
- Available in indicating and non-indicating versions
- The indicating version features local *easy*ID™ open fuse technology for faster troubleshooting and reduced downtime
- Faster response to damaging faults helps reduce destructive thermal and magnetic forces
- True dual-element fuse construction with a minimum 10 seconds time-delay at 500% of rating
- Long time-delay minimizes nuisance openings caused by temporary overloads and transient surges
- Up to 300 kA interrupting rating safely interrupts virtually any fault
- Robust cycling and inrush current withstand
- Low let-through currents under fault conditions
- Provides Type 2 "No Damage" protection for IEC motor starters when properly sized
- Easy selective coordination with any other Bussmann series Low-Peak Class CC, J, L or RK1 fuse with simple 2:1 amp ratio between upstream and downstream fuses

* Finger-safe status depends on final, installed application, and will require using accessory shrouds for 110 to 400 A ratings.

CUBEFuse (cat. no. TCFH_N) holders

The CUBEFuse is also used in holders that can be dovetail together for the smallest footprint possible of any Class J fuse solution (see data sheet no. 9007 for details).

Finger-safe DIN-Rail or panel mount holders up to 100 A.

- 30 A holder accepts any CUBEFuse up to 30 A.
- 60 amp holder accepts any CUBEFuse up to 60 A.
- 100 amp holder accepts any CUBEFuse up to 100 A.

Panel mount holders from 200 to 400 A.

- 200 A holder accepts any CUBEFuse from 110 to 200 A
- 225 A* holder accepts any CUBEFuse from 110 to 225 A
- 400 A holder accepts any CUBEFuse from 110 to 400 A

Finger-safe installation achievable for three ganged holders and lug kits with shroud

* 200 A and 225 A holders share the same overall dimensions, but the 200 A holder will reject a 225 A fuse.

Ordering a complete switch installation

200 A CCP2 switches

For a complete installation, select from the following required and optional components, and accessories.

		Catalog no.			
		Switches	**Amps**	**Poles**	
Required		CCP2-1-200CF	200	1	
		CCP2-2-200CF		2	
		CCP2-3-200CF		3	
		And			
		Lug kits	**Description**		
		CCP2-L2-1	Stainless steel lug, 75° Cu only, 350 kcmil-4, 1 per pack		
		CCP2-L2-1A	Aluminum lug, 75°C Cu/Al, 350 kcmil-4, 1 per pack		
		CCP2-MW2-3	3-port multi-wire lug, 75°C Cu/Al, 2-14, 3 per pack, includes terminal shroud		
		CCP2-MW2-6	6-port multi-wire lug, 75°C Cu/Al, 6-14, 3 per pack, includes terminal shroud		
And					
Optional	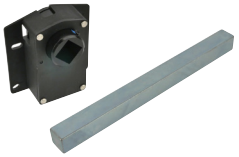	**Rotary mechanisms**	**Description**		
		CCP2-SM	Side rotary mechanism - mounts on left or right side of 1-, 2- and 3-pole switches		
		CCP2-RM2	Front rotary mechanism - mounts only on 3-pole switches, requires clockwise rotating handle		
		And			
		Rotary handles	**Description**	**Rotation - must match switch rotation**	**Rating**
		CCP2-H4X-B3	Short pistol handle — black/grey	Clockwise	Type 1, 4X, 12
		CCP2-H4X-R3	Short pistol handle — red/yellow	For use with front rotary mechanism or side rotary mechanism CCP2-SM on the switch's right side	
		CCP2-H4X-B4	Long pistol handle — black/grey		
		CCP2-H4X-R4	Long pistol handle — red/yellow		
		CCP2-H4X-B3L	Short pistol handle — black/grey	Counterclockwise	
		CCP2-H4X-R3L	Short pistol handle — red/yellow	Use **only** if installing side rotary mechanism CCP2-SM on the switch's left side	
		CCP2-H4X-B4L	Long pistol handle — black/grey		
		CCP2-H4X-R4L	Long pistol handle — red/yellow		
		And			
		Shafts (12 mm)	**Length**		
		CCP2-SH2-225	225 mm		
		CCP2-SH2-425	425 mm		
		NFPA 79 compliant handle	**Color**		
		CCP2-NFPA-2	Red		

Optional

Or		
Flange handle rod operator	**Description — 3-pole switches only, cannot be used with side or front rotary mechanisms**	**Rating**
CCP2-FLR2-21	Red/black, painted handle	Type 1, 3R and 12
CCP2-FLR2-21X	Chrome handle	Type 4X

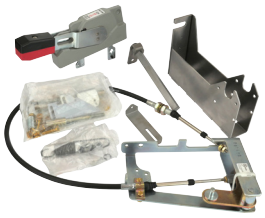

Or		
Flange handle cable operator	**Description - 3-pole switches only, cannot be used with side or front rotary mechanisms**	**Rating**
CCP2-FLC2-36	36″ cable, red/black painted handle	Type 1, 3R and 12
CCP2-FLC2-36X	36″ cable, chrome handle	Type 4X
CCP2-FLC2-60	60″ cable, red/black painted handle	Type 1, 3R and 12
CCP2-FLC2-60X	60″ cable, chrome handle	Type 4X
CCP2-FLC2-120	120″ cable, red/black painted handle	Type 1, 3R and 12
CCP2-FLC2-120X	120″ cable, chrome handle	Type 4X

And

Accessories

Terminal shrouds	Description
CCP2-TS2-3	3-pole terminal shroud with phase shields, 1 per pack
Phase barriers	**Description**
CCP2-PB2	Phase barriers, 2 per pack

And

Control wire terminals	Description
CCP2-CWK2	1/4″ quick-connect control wire terminals - mounts on installed lug (cannot be used with lug CCP2-L2-1), 12 per pack

Auxiliary contacts	Description
CCP2-AUX-S	NO/NC, 5 A, 240 V - Can be mounted on right or left side

Handle extension	Description
CCP2-HEX	Handle extension to facilitate operating 1-, 2 and 3-pole switches. Cannot be used when side or front rotary mechanisms or flange handle rod or cable operators are installed.

Ordering a complete switch installation

400 A CCP2 switches

For a complete installation, select from the following required and optional components, and accessories.

		Catalog no.		
		Switches	**Amps**	**Poles**
Required		CCP2-1-400CF	400	1
		CCP2-2-400CF		2
		CCP2-3-400CF		3
		And		
		Lug kits	**Description**	
		CCP2-L4-1	Stainless steel lug, 75° Cu only, 500 kcmil-3, 1 per pack	
		CCP2-L4-1A	Aluminum lug, 75° Cu only, 500 kcmil-3, 1 per pack	
		CCP2-L4B-3	Stainless steel lug, 75° Cu only, 750-500 kcmil, 3 per pack, includes terminal shroud	
		CCP2-L4B-3A	Aluminum lug, 75°C Cu/Al, 750-500 kcmil, 3 per pack, includes terminal shroud	
		CCP2-MW6-6	6-port multi-wire lug, 75°C Cu/Al, 1/0-14, 3 per pack, includes terminal shroud	
		CCP2-L6-3	2-port stainless steel lug, 75° Cu only, 500 kcmil-2, 3 per pack, includes terminal shroud	
		CCP2-L6-3A	2-port aluminum lug kit, 75° Cu/Al only, 500 kcmil-2, 3 per pack, includes terminal shroud	
And				
Optional	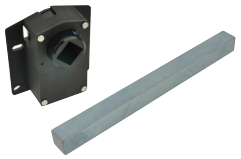	**Rotary mechanisms**	**Description**	
		CCP2-SM	Side rotary mechanism - mounts on left or right side of 1-, 2- and 3-pole switches	
		CCP2-RM4	Front rotary mechanism - mounts only on 3-pole switches, requires clockwise rotating handle	
		And		
		Rotary handles	**Description**	**Rotation - must match switch rotation** / **Rating**
		CCP2-H4X-B3	Short pistol handle — black/grey	Clockwise / For use with front rotary mechanism or side rotary mechanism CCP2-SM on the switch's right side / Type 1, 4X, 12
		CCP2-H4X-R3	Short pistol handle — red/yellow	
		CCP2-H4X-B4	Long pistol handle — black/grey	
		CCP2-H4X-R4	Long pistol handle — red/yellow	
		CCP2-H4X-B3L	Short pistol handle — black/grey	Counterclockwise / Use **only** if installing side rotary mechanism CCP2-SM on the switch's left side
		CCP2-H4X-R3L	Short pistol handle — red/yellow	
		CCP2-H4X-B4L	Long pistol handle — black/grey	
		CCP2-H4X-R4L	Long pistol handle — red/yellow	
		And		
		Shafts (12 mm)	**Length**	
		CCP2-SH2-225	225 mm	
		CCP2-SH2-425	425 mm	
		NFPA 79 compliant handle	**Color**	
		CCP2-NFPA-2	Red	

Optional		**Or**	
		Flange handle rod operator	**Description - 3-pole switches only, cannot be used with side or front rotary mechanisms**	**Rating**
		CCP2-FLR2-21	Red/black, painted handle	Type 1, 3R, 12
		CCP2-FLR2-21X	Chrome handle	Type 4X
	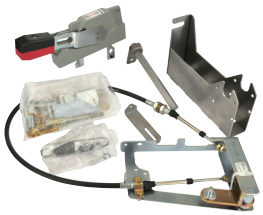	**Or**	
		Flange handle cable operator	**Description - 3-pole switches only, cannot be used with side or front rotary mechanisms**	**Rating**
		CCP2-FLC2-36	36″ cable, red/black painted handle	Type 1, 3R, 12
		CCP2-FLC2-36x	36″ cable, chrome handle	Type 4X
		CCP2-FLC2-60	60″ cable, red/black painted handle	Type 1, 3R, 12
		CCP2-FLC2-60x	60″ cable, chrome handle	Type 4X
		CCP2-FLC2-120	120″ cable, red/black painted handle	Type 1, 3R, 12
		CCP2-FLC2-120x	120″ cable, chrome handle	Type 4X
And				
Accessories	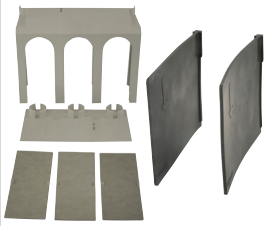	**Terminal shrouds**	**Description**	
		CCP2-TS6-3	3-pole terminal shroud with phase shields, 1 per pack	
		Phase barriers	**Description**	
		CCP2-PB6	Phase barriers, 2 per pack	
		And		
		Auxiliary contacts	**Description**	
		CCP2-AUX-S	NO/NC, 5 A, 240 V - Can be mounted on right or left side	
		Handle extension	**Description**	
		CCP2-HEX	Handle extension to facilitate operating 1-, 2 and 3-pole switches. Cannot be used when side or front rotary mechanisms, or flange handle rod and cable mechanisms are installed.	

CUBEFuse Compact Circuit Protector Base

RoHS 2011/65/EU

1-Pole	2-Pole	3-pole
CCP2B-1-_CF	CCP2B-2-_CF	CCP2B-3-_CF

Description

The revolutionary Bussmann series Compact Circuit Protector Base (CCP2B) with CUBEFus™ is a UL 98 horsepower rated fused branch circuit disconnect. Primarily used in the Bussmann series Quik-Spec™ Coordination Panelboard, the CCP2B with CUBEFuse simplifies selective coordination for code complaince along with a lockout/tagout feature for isolating individual branch circuit loads to promote safe work practices.

Features

- Uses finger-safe, current-limiting Class CF CUBEFuse with Class J performance available, time-delay or fast-acting versions from 1 to 100 amps
- Patented amp rating rejection feature helps prevent overfusing
- High 200 kA short-circuit current rating
- Disconnect rated to provide a means for load isolation
- 2- and 3-pole versions full voltage rated at 600 Vac
- Up to 125 Vdc ratings
- UL 98 Listed for branch circuit disconnect
- 1-, 2- and 3-pole versions are horsepower rated
- Listed to UL and cULus
- Open fuse indication lamp per pole speeds troubleshooting
- Additional open fuse indication can be provided by using the time-delay indicating CUBEFuse in ratings from 6 to 100 A
- Built-in switch/fuse interlock prevents removing or installing a fuse while energized
- Permanent lockout/tagout and lock-on provision usign a 1/4" lock

Specifications:

Switch amp ratings and rejection breaks

- 15, 20, 30, 40, 50, 60, 70, 90 and 100 A

Poles

- 1-, 2- and 3-poles

Volts

- 600 Vac (or less)
- 125 Vdc*

* Switch amp rating and installed fuse amp rating dependent, see catalog number table for details.

Agency information

- UL 98 Listed, Guide WHTY, File E302370
- cULus to Canadian Standard 22.2 No. 4, Guide WHTY7, File E302370
- RoHS compliant
- CE

Lineside bolt-on bus connector and torque

- Bolt-mounted design into Quik-Spec Coordination Panelboard bus
- #10-32 UNC hex flange Phillips screw; 2.8 N•m (25 lb-In)

Loadside box lug terminal conductor data

- See conductor table for details

Loadside fork terminal

- Max. 30 A suitable for use with #8-32 UNC screw

Lockout/tagout

- 1/4" lock

Local open fuse indication

- Light illumination requires closed circuit and minimum 90 volts

Carton quantity and shipping weight

Item	Poles	lbs (kg)
up to 60 amp switches	6	1.7 (0.77)
70 to 100 amp switches	6	2.6 (1.18)

Environmental data

- Storage and operating temperature -20°C to 75°C**

**For fuse performance under or above 25°C, consult fuse performance derating charts.

Available Bussmann series fuses

UL fuse class	Type/description	Volts	Data sheet no.
CF	Indicating time-delay, Low-Peak CUBEFuse (6-100 A)	600 Vac/ 300 Vdc	9000
	Non-indicating time-delay, Low-Peak CUBEFuse (1-100 A)		
	Non-indicating fast-acting CUBEFuse (1-100 A)	600 Vac/dc	2147

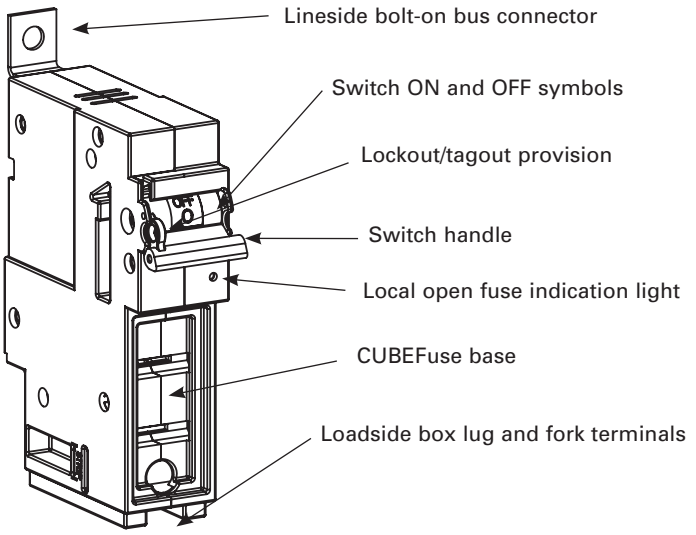

Data sheet no: 1161

Catalog numbers and ratings

Catalog numbers	Poles	Voltage ratings	Accepts CUBEFuse amp range	SCCR	Hp ratings (Vac)†††
CCP2B-1-15CF	1	347 Vac, 125 Vdc	1 to 15	200 kA AC 100 kA DC	0.5 Hp @ 120 V
CCP2B-2-15CF	2	600 Vac, 125 Vdc			1.5 Hp @ 240 V
CCP2B-3-15CF	3	600 Vac			3 Hp @ 240 V 5 Hp @ 480 V 7.5 Hp @ 600 V
CCP2B-1-20CF	1	347 Vac, 125 Vdc	1 to 20		0.75 Hp @ 120 V
CCP2B-2-20CF	2	600 Vac, 125 Vdc			2 Hp @ 240 V
CCP2B-3-20CF	3	600 Vac			3 Hp @ 240 V 7.5 Hp @ 480 V 10 Hp @ 600 V
CCP2B-1-30CF	1	347 Vac, 125 Vdc	1 to 30		1.5 Hp @ 120 V
CCP2B-2-30CF	2	600 Vac, 125 Vdc			3 Hp @ 240 V
CCP2B-3-30CF	3	600 Vac			5 Hp @ 240 V 15 Hp @ 480 V 10 Hp @ 600 V
CCP2B-1-40CF	1	347 Vac, 125 Vdc	1 to 40		2.0 Hp @ 120 V
CCP2B-2-40CF	2	600 Vac, 125 Vdc			3 Hp @ 240 V
CCP2B-3-40CF	3	600 Vac			7.5 Hp @ 240 V 20 Hp @ 480 V 10 Hp @ 600 V
CCP2B-1-50CF	1	347 Vac, 125 Vdc*	1 to 50		3.0 Hp @ 120 V
CCP2B-2-50CF	2	600 Vac, 125 Vdc*			5 Hp @ 240 V
CCP2B-3-50CF	3	600 Vac			7.5 Hp @ 240 V 20 Hp @ 480 V 10 Hp @ 600 V
CCP2B-1-60CF	1	347 Vac, 125 Vdc*	1 to 60		3.0 Hp @ 120 V
CCP2B-2-60CF	2	600 Vac, 125 Vdc*			7.5 Hp @ 240 V
CCP2B-3-60CF	3	600 Vac			7.5 Hp @ 240 V 20 Hp @ 480 V 10 Hp @ 600 V
CCP2B-1-70CF	1	347 Vac, 125 Vdc	1 to 70		3.0 Hp @ 120 V
CCP2B-2-70CF	2	600 Vac, 125 Vdc			7.5 Hp @ 240 V
CCP2B-3-70CF	3	600 Vac			15 Hp @ 240 V 30 Hp @ 480 V 40 Hp @ 600 V
CCP2B-1-90CF	1	347 Vac, 125 Vdc**	1 to 90		5.0 Hp @ 120 V
CCP2B-2-90CF	2	600 Vac, 125 Vdc**			10 Hp @ 240 V
CCP2B-3-90CF	3	600 Vac			20 Hp @ 240 V 50 Hp @ 480 V 40 Hp @ 600 V
CCP2B-1-100CF	1	347 Vac, 125 Vdc**	1 to 100		5.0 Hp @ 120 V
CCP2B-2-100CF	2	600 Vac, 125 Vdc**			10 Hp @ 240 V
CCP2B-3-100CF	3	600 Vac			20 Hp @ 240 V 50 Hp @ 480 V 40 Hp @ 600 V

† 1 and 3 A indicating CUBEFuse not available. Correct fit with CCP2B disconnect requires indicating CUBEFuse with date code R38 or later.
†† Not for use with motors.
††† Indicating or non-indicating time-delay CUBEFuse only.
* 125 Vdc for installed fuse amp ratings up to 40 A. 24 Vdc for installed fuse amp ratings from 45 to 60 A.
** 125 Vdc for installed fuse amp ratings up to 80 A, 24 Vdc for installed fuse amp ratings from 90 to 100 A.

Data sheet no: 1161

Box lug conductor data

Wire type	AWG range	Class	Quantity	Torque N•m (lb-in)
15 to 60 A switches				
75°C Cu	4-6	Stranded, Class B to K	Single	3.95 (35)
	8-18			2.26 (20)
	6-8	Stranded, Class B/C	Dual	3.39 (30)
		Stranded, Class K		2.26 (20)
	10-18	Stranded, Class B to K		
	10-18	Solid	Single/dual	2.26 (20)
	4-18	Stranded, UL ferrule, Class B/C	Single	3.39 (30)
	6-18		Twin†	
	4-18	Stranded, UL ferrule, Class K	Single	2.82 (25)
	6-18		Twin†	
70 to 100 A switches				
75°C Cu	12-18	Stranded, Class B to K	Single	2.26 (20)
	10			2.82 (25)
	8			4.52 (40
	4-6			5.08 (45)
	1-3			6.21 (55)
	3-12	Stranded, Class B to K	Dual	3.95 (35)
	12-18	Stranded, UL ferrule, Class B/C	Single	2.26 (20)
	10			3.95 (35)
	1-8			4.52 (40)
	10-18		Twin†	2.26 (20)
	6-8			2.82 (25)
	10-18	Solid	Single	2.26 (20)
	10-18		Dual	2.26 (20)
	8-18	Class K	Single	2.26 (20)
	1-6			3.39 (30)
	3-10		Dual	5.08 (45)
	8-18	Class K, UL ferrule	Single	2.26 (20)
	1-6			3.39 (30)
	6-18		Twin	2.26 (20)

† Two stranded conductors placed in one UL Listed twin ferrule.

Dimensions — in (mm)

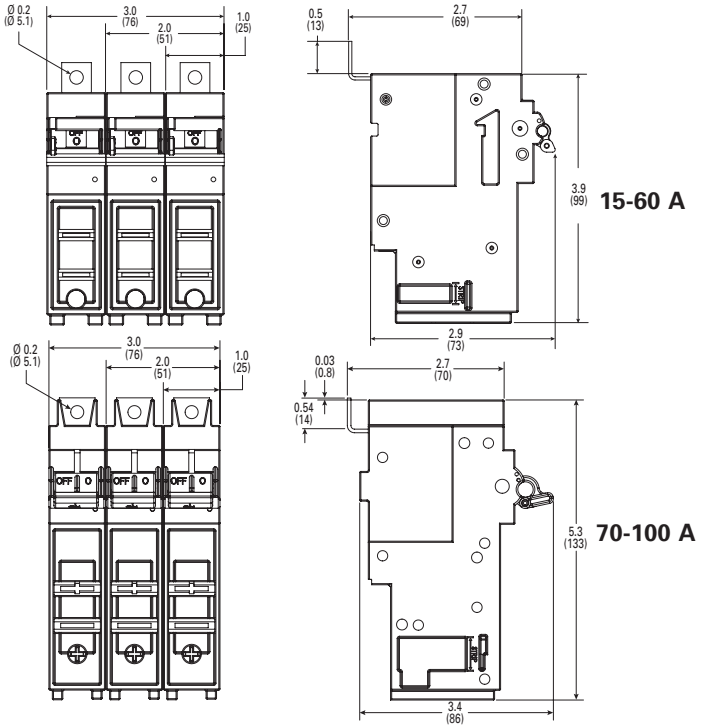

For details on the CCP2B and its use in the Quik-Spec Coordination Panelboard, see data sheet no. 1160.

Disconnect switches

Compact Circuit Protector (cat. no. CCP2)

For use with Class CC, Supplemental and IEC 10x38 mm fuses

CCP2 switch

Class CC and midget CCP contents **Section page**

Description and specifications 39-40
Catalog numbers 41
Conductor information and available fuses 42
Dimensions 42
Accessories
Multi-wire lug kit 43
Selector and pistol handles 44
NFPA 79 compliant handle 44
Shafts. 44
Auxiliary contacts 45
PLC fuse monitor 46-47
How to order tables
Clockwise rotary operated switches 48-49
Switches only 50
Counterclockwise rotary operates switches 51

CCP2 right front rotary switch

CCP2 left front rotary switch

CCP2 right side rotary switch

CCP2 left side rotary switch

Catalog symbols

Symbol	Fuse type	Description
CCP2-(poles)-30CC	Class CC	Switch only
CCP2-(poles)-30M	UL sup./IEC 10x38	
CCP2-1-DCC	Class CC Vdc	1-pole switch only
CCP2-1-DCM	UL sup./IEC 10x38 Vdc	
CCP2R-(pole)-30CC	Class CC	Right front rotary switch
CCP2R-(pole)-30M	UL sup./IEC 10x38	
CCP2RL-(pole)-30CC	Class CC	Left front rotary switch
CCP2RL-(pole)-30M	UL sup./IEC 10x38	
CCP2S-(pole)-30CC	Class CC	Right side rotary switch
CCP2S-(pole)-30M	UL sup./IEC 10x38	
CCP2SL-(pole)-30CC	Class CC	Left side rotary switch
CCP2SL-(pole)-30M	UL sup./IEC 10x38	

Description

The revolutionary next generation Bussmann™ series Compact Circuit Protector (cat. no. CCP2) fused disconnect switch is 3/5 the footprint of a traditional fusible switch and provides up to a high 200 kA Short-Circuit Current Rating (SCCR) to help improve panel and assembly SCCR.

The 35 mm DIN-Rail mount CCP is available in a variety of configurations to meet many application needs including rotary operation.

Application flexibility is extended with an optional multi-wire lug kit, with finger-safe shrouds, that provides three additional wire ports on each pole for power distribution applications.

Other accessories include a PLC interface device for open fuse monitoring and NO/NC auxiliary contacts that easily integrate into many monitoring systems.

Front and side rotary operated versions are easily applied for through-the-door or through the left or right side operation to enhance safety.

Ratings

- Volts
  - 600 Vac (UL® Class CC)
  - 240 Vac (UL Supplemental)
  - 400 Vac (IEC 10x38 mm)
  - 80 Vdc (DC Class CC, DC UL Supplemental/IEC)
- Amps
  - 30 A (UL)
  - 32 A (IEC)
- SCCR
  - 200 kA (UL Class CC)
  - 10 kA (UL Supplemental)
  - 120 kA (IEC 10x38 mm max)
  - 20 kA (DC Class CC/UL)
  - 10 kA (DC UL Supplemental/IEC)

Poles

- 1-, 2- and 3-poles catalog number dependent

Agency information

- UL Class CC fuse versions
  - UL 98 Listed, Guide WHTY, File E302370
  - cULus to Canadian Standard 22.2 No. 4-04, UL Guide WHTY7, File 302370
- UL Supplemental and IEC 10x38 mm fuse versions
  - UL 508 Listed, Guide NRNT, File E320230
  - cULus Certified 22.2 No. 14-05
  - IEC 60947-3 AC-23A
- DC voltage UL Class CC version (CCP2-1-DCC)
  - UL 508 Listed, cULus 22.2, No. 1405
- DC IEC 10x38 version (CCP2-1-DCM)
  - IEC 60947-3, DC-23A
- RoHS compliant
- CE

Conductors/terminals

- 75°C Cu/Al, see conductor tables for size, type and torque information
- Box lug, single/dual conductor
- Fork terminal suitable for line, load or accessory connection
- Multi-wire lug kit — see accessories for details

Storage and operating temperature

- - 20°C to 75°C (-4°F to 167°F)*

* For fuse performance under or above 25°C, consult fuse performance derating charts in the Bussmann Division publication no. 3002, titled Selecting Protective Devices (SPD)

Lockout/tagout provisions

- Switch only — 4 mm lock or Brady pin-out device part number 90850
- Switch with rotary operating mechanism — 1/4″ lock

Minimum enclosure size

- 10″ x 8″ x 6″ (254 x 203 x 152 mm)

Mounting

- 35 mm DIN-Rail

Local open fuse indication minimum voltage**

- 90 Vac for AC switches
- 12 Vdc for DC switches

** Open fuse indication requires an open fuse to be in the CCP2 and the switch in the ON position.

Accessories

- Multi-wire lug kit with terminal shrouds
- Selector and pistol handles for use with rotary operated switches
- 8 mm shafts for use with selector and pistol handles
- Auxiliary contacts
- PLC fuse monitor

Features

- Extremely compact (18 mm wide per pole) design
- High SCCR up to 200 kA (UL Class CC) and 120 kA (IEC)
- Disconnect rated for load isolation
- Full voltage rated up to 600 Vac or 80 Vdc
- UL 98 Listed Class CC version is horsepower rated and suitable for branch circuit protection and disconnect
- IEC 10x38 version complies with IEC 60947-3 and suitable for branch circuit protection and disconnect
- Suitable for global installations, the switches comply with UL, cULus and IEC standards accepting UL Class CC, Supplemental or IEC aM and gG/gL fuses
- Open fuse indication
  - Standard local open fuse indicating light for each pole
  - Optional PLC fuse monitor can be utilized to signal a PLC and open a contactor to de-energize all phases, if required
- IP20 finger-safe with 10 AWG (6 mm^2) or larger wire (box lug terminals only)
- Built-in switch interlock prohibits removing the fuse under load
- Padlockable handle for lockout/tagout
  - 4 mm lock for switch only
  - 1/4″ lock for rotary operated switches
- Rotary operated versions provide for through-the-door and through-the-side operation flexibility and enhanced safety with:
  - Right front switch operation
  - Left front switch operation
  - Right side switch operation
  - Left side switch operation
- Optional selector and pistol handles available for use with rotary operated versions
- Multi-wire lug kit with terminal shrouds allows for power distribution to multiple loads. Each lug has three ports rated for single and dual wires (see lug kit in accessories for conductor and torque details).

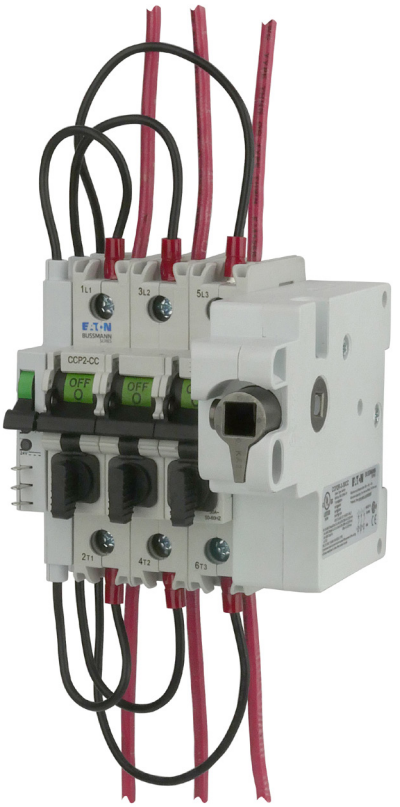

Right front rotary operated CCP2 switch with PLC fuse monitor.

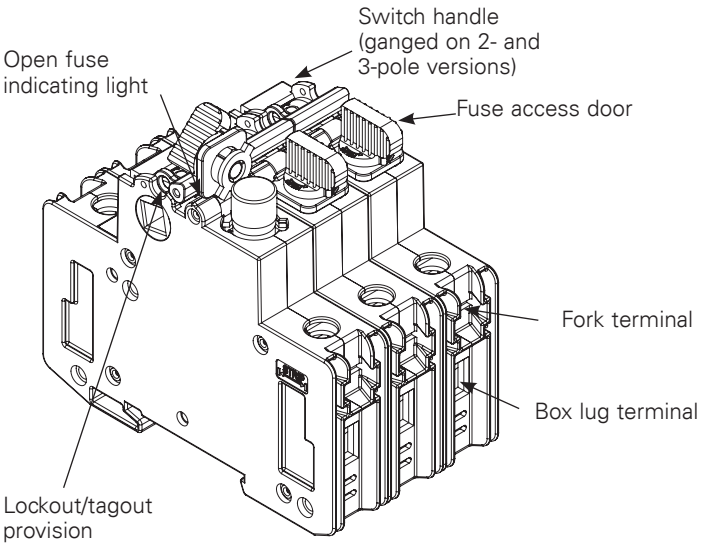

Rotary operating switch versions

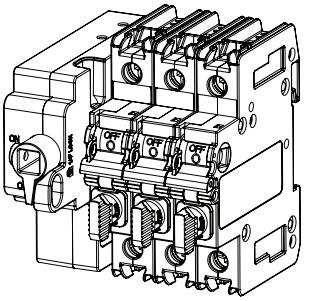

Left front rotary switch
Clockwise operating handles

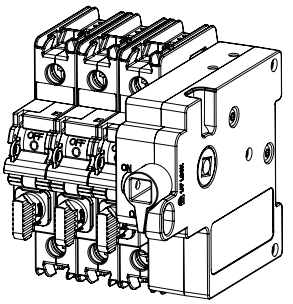

Right front rotary switch
Clockwise operating handles

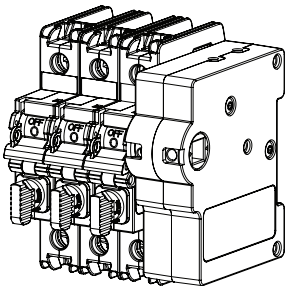

Right side rotary switch
Clockwise operating handles

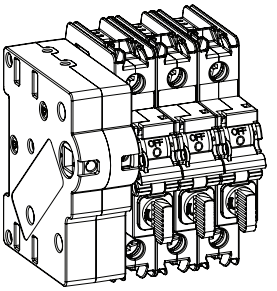

Left side rotary switch
Counterclockwise operating handles

Catalog numbers

Catalog no.	Poles	Description	Amps	Volts	SCCR	Max horsepower rating (Vac) 120	240	480	600	Wire type/ size*
Class CC										
CCP2-1-30CC	1	Switch only	30 A	347 Vac	200 kA	1/2	—	—	—	75°C Cu/Al 18-4 AWG Fork terminal††
CCP2-2-30CC	2			600 Vac		—	2	—	—	
CCP2-3-30CC	3					3/4	3	5	7.5	
CCP2R-2-30CC	2	Switch with right front rotary operation		600 Vac		—	2			
CCP2R-3-30CC	3					3/4	3	5	7.5	
CCP2RL-2-30CC	2	Switch with left front rotary operation		600 Vac		—	2	—	—	
CCP2RL-3-30CC	3					3/4	3	5	7.5	
CCP2S-2-30CC	2	Switch with right side rotary operation		600 Vac		—	2	—	—	
CCP2S-3-30CC	3					3/4	3	5	7.5	
CCP2SL-2-30CC	2	Switch with left side rotary operation		600 Vac		—	2	—	—	
CCP2SL-3-30CC	3					3/4	3	5	7.5	
UL Supplemental and IEC 10x38 mm										
CCP2-1-30M	1	Switch only	UL 30 A IEC 32 A**	UL 240 Vac† IEC 400 Vac†	UL 10 kA† IEC 120 kA†	—	—	—	—	75°C Cu/Al 18-4 AWG Fork terminal††
CCP2-2-30M	2									
CCP2-3-30M	3									
CCP2R-2-30M	2	Switch with right front rotary operation								
CCP2R-3-30M	3									
CCP2RL-2-30M	2	Switch with left front rotary operation								
CCP2RL-3-30M	3									
CCP2S-2-30M	2	Switch with right side rotary operation								
CCP2S-3-30M	3									
CCP2SL-2-30M	2	Switch with left side rotary operation								
CCP2SL-3-30M	3									
Single-pole DC switches										
CCP2-1-DCC	1	UL Class CC	30 A	80 Vdc†	20 kA†	—	—	—	—	75°C Cu/Al 18-4 AWG Fork terminal††
CCP2-1-DCM	1	UL supplemental	30 A	80 Vdc†	10 kA†	—	—	—	—	
		IEC 10x38	32 A**							

* See box lug terminal conductor data table for details.
**32 A Class aM, 25 A Class gG.
† SCCR may be lower, refer to installed fuse data sheet for interrupting rating at applied voltage.
††Fork terminal with a 4.3 mm gap for a #8-32 stud, 30 A max, insulated flange, wire size 12-10 AWG.

Box lug terminal conductor data

Type	AWG range	Class	Quantity	Torque N•m (lb-in)
Cu	4-18	Stranded, Class B to K	Single	2.26 (20)
	6-8	Stranded, Class B/C	Dual	3.39 (30)
	6-8	Stranded, Class K	Dual	2.26 (20)
	10-18	Stranded, Class B to K		
	10-18	Solid	Single/dual	
	4-18	Stranded, UL ferrule, Class B/C	Single	3.39 (30)
	6-18		Twin†	
	4-18	Stranded, UL ferrule, Class K	Single	2.82 (25)
	6-18		Twin†	
Al	4-8	Stranded	Single	2.26 (20)
	6		Dual	2.82 (25)
	8			2.26 (20)

† Two stranded conductors placed in one UL Listed twin ferrule.

Available Bussmann series fuses

Fuse class	Type/description	Volts	Data sheet no.
CC	LP-CC time-delay	600 Vac/300 Vdc*	1023
	FNQ-R time-delay	600 Vac/300 Vdc	1014
	KTK-R fast-acting	600 Vac	1015
M	FNM time-delay	250 Vac	2028
	FNQ time-delay	500 Vac	1012
	KTK fast-acting	600 Vac	1011
	BAF fast-acting	250 Vac	2011
	KLM fast-acting	600 Vac/dc	2020
gG/gL	C10G	500 V (400 V@32 A)	720115
aM	C10M	500 V (400 V@20@25 A)	720115

* 1/2 to 2-1/2 and 20 to 30 A are 300 Vdc, 2-8/10 to 15 A are 150 Vdc.

Dimensions – mm (in)

Switch

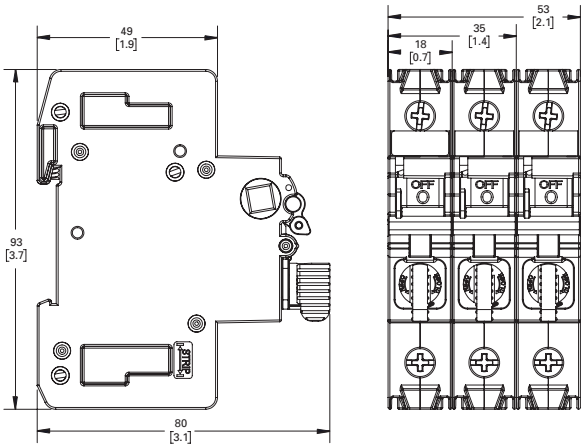

Left front and right front rotary switches

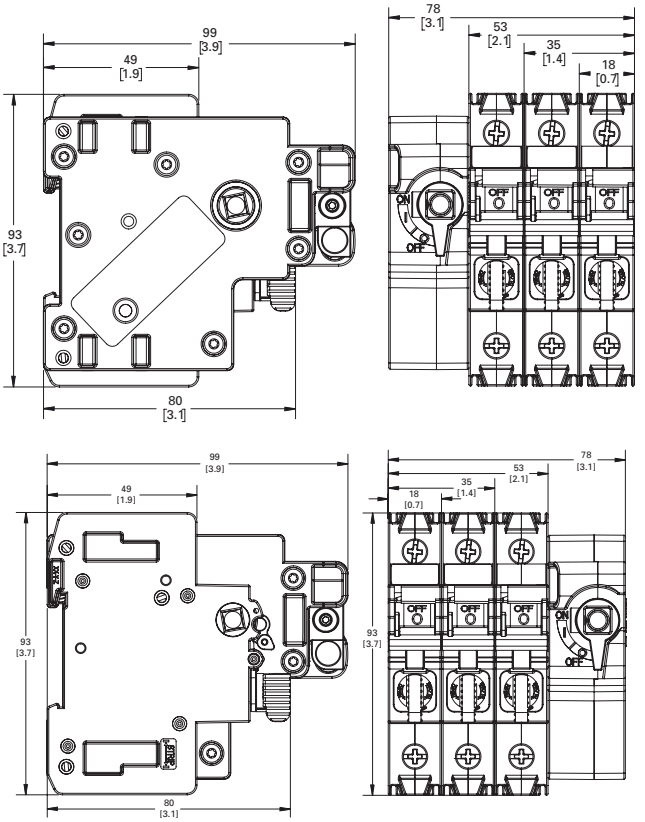

Left side and right side rotary switches

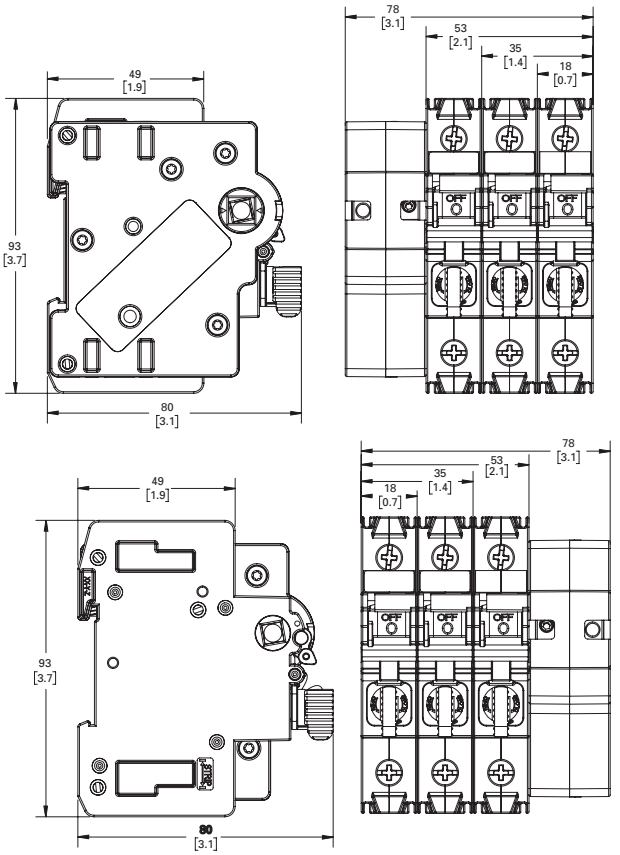

Multi-wire lug kit

Catalog number

- CCP2-MW1-3

Description

The multi-wire lug kit permits expanding each box lug terminal on the switch into a three-port terminal for power distribution applications.

Each multi-wire lug kit comes with three (3) three-port lugs and three terminal shrouds. Shrouds provide finger-safe protection when properly installed.

Lugs may be mounted on either the loadside or lineside to meet various application needs.

Ports on any one lug accept any conductor combination listed, e.g., one of the three ports may have dual 14 AWG wires and the other two ports single 10 AWG wires.

Ratings

- Volts 600 V
- Amps 60 A max
- SCCR 200 kA

Agency information

- UL Recognized (lug only)
- RoHS compliant

Storage and operating temperature

- - 20°C to 75°C (-4°F to 167°F)

Multi-wire lug conductor information

- 75°C Cu/AL
- AWG size and quantity per port - see table below

Type	AWG range	Class	Quantity	Torque N•m (lb-in)
Cu/Al	4-6	Stranded, Class B/C	Single	3.95 (35)
	8			2.82 (25)
Cu	10-14	Stranded, Class B/C	Single/dual*	2.26 (20)
	10-14	Solid	Single	2.26 (20)
	8	UL ferrule, Class B to K	Single/twin†	2.82 (25)
	10-14			2.26 (20)

* Dual wire to be same size and type.
† Two stranded conductors placed in one UL Listed twin ferrule.

CCP2 box lug torque for multi-wire lug

- 4.52 N•m (40 lb-in)

Terminal shroud accessory

Terminal shrouds are available without multi-wire terminals.

Catalog no.	Description
CCP2-TS1-3	Pack of three

Installed on CCP2-3-xx

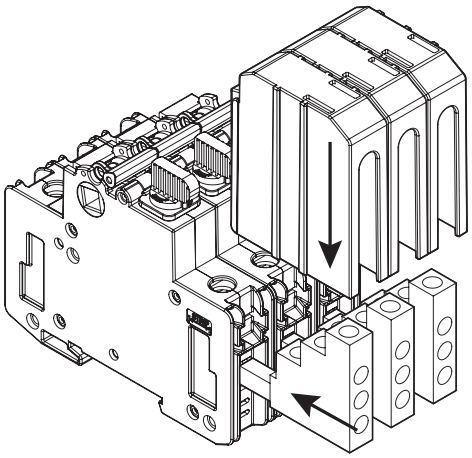

Multi-wire lugs mount in switch box lug terminals to provide three additional wire ports per pole. Lugs can be mounted on the switch lineside or loadside. Each multi-wire lug kit comes with three lugs and three shrouds.

Wire insulation strip lengths

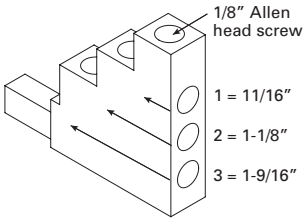

Strip back wire insulation to the lengths as indicated in the illustration above and the table below.

Lug port	Strip wire insulation back (inch)
1	11/16
2	1-1/8
3	1-9/16

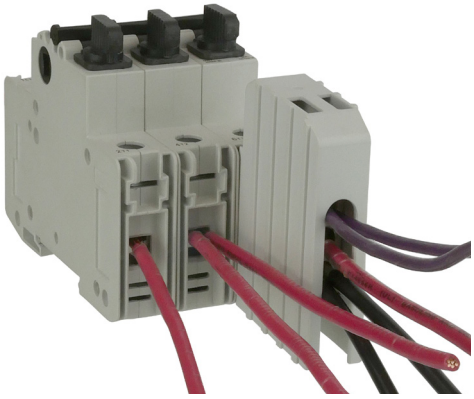

Wiring versatility is provided by single/dual rated box lug terminals on the switch, or by the three-port multi-wire lug kit that's also single/dual wire rated.

Selector and pistol handles

Catalog symbol

- CCP2-H4X-_

Description

Selector and pistol handles for use with any 2- and 3-pole CCP2 rotary operated switch. Both selector and pistol handles are available in black/grey and red/yellow colors and clockwise/counterclockwise operating modes. Applying clockwise and counterclockwise operation depends upon the CCP2 rotary switch configuration. Installation requires an 8 mm shaft (ordered separately).

Each handle is rated NEMA 4X and capable of accepting up to three (3) 1/4" diameter shank locks for lockout/tagout in the OFF position. They can also be field configured for lock-on.

In application, only the clockwise operating handles in combination with either the left front or right front rotary switches provide a door interlock means to ensure the enclosure door remains shut during lockout/tagout or lock-on. Both clockwise and counterclockwise operating handles when mounted on the enclosure's left or right side do NOT provide a door interlock means.

See the catalog number table below for applicable rotary switch, handle and shaft combinations.

Agency information

- UL Listed, Guide DIHS, File E140305
- NEMA 4X rating
- RoHS compliant
- CE

Storage and operating temperature

- -20°C to 75°C (-4°F to 167°F)

Packaging

- Each handle is packaged individually

Handle shafts

Catalog symbol

- CCP2-SH1-_

Description

Eight millimeter square shafts available in 290 and 490 millimeter (11.5 and 19.3 inch) lengths. Shafts are indexed to ensure handle/switch orientation for correct operation. Shafts are cut to length when installed.

Packaging

- Each shaft is packaged separately

Selector handles

Pistol handles

Handle shafts

NFPA 79 compliant handle

Catalog number

- CCP2-NFPA-1

Description

NFPA 79 compliant handle mounts on the shaft of front rotary operated switch installations and provide a lockout means independent of the door position.

For these switch catalog numbers	Description/operation	Order these handle catalog numbers (description)	Order either shaft catalog number
CCP2R-(pole)-30CC	Right front rotary, clockwise	• CCP2-H4X-B1 (selector, black/grey) • CCP2-H4X-R1(selector, red/yellow) • CCP2-H4X-B2 (pistol, black/grey) • CCP2-H4X-R2 (pistol, red/yellow)	• CCP2-SH1-290 (11.5"/290 mm) • CCP2-SH1-490 (19.3"/490 mm)
CCP2R-(pole)-30M			
CCP2RL-(pole)-30CC	Left front rotary, clockwise		
CCP2RL-(pole)-30M			
CCP2S-(pole)-30CC	Right side rotary, clockwise		
CCP2S-(pole)-30M			
CCP2SL-(pole)-30CC	Left side rotary, counterclockwise	• CCP2-H4X-B1L (selector, black/grey) • CCP2-H4X-R1L (selector, red/yellow) • CCP2-H4X-B2L (pistol, black/grey) • CCP2-H4X-R2L (pistol, red/yellow)	
CCP2SL-(pole)-30M			

Auxiliary contacts

Catalog number

- CCP2-AUX

Description

NO+NC contact output to indicate the switching mechanism status on the CCP2. A single unit can be mounted on any 1-, 2- or 3-pole CCP2 switch and the left front/left side rotary operated switches.

Ratings

- Amps up to 5 A
- Volts up to 240 Vac
- NC/NO contacts are closed/open when the CCP2 switch is in the "ON" position (closed)

Description	Max per CCP2*	Signal output
Auxiliary contacts NO+NC for switch status	1 per CCP2 (1-, 2- or 3-pole)	5 A / 240 Vac

* The CCP2-AUX CANNOT be mounted on the right front and right side rotary operated versions.
De-energize all circuits and follow all prevailing safety procedures before installing or removing the CCP2-AUX.

Agency information

- UL 98 Recognized, Guide WHTY2, File E155130
- cURus to Canadian Standard 22.2 No. 4-04
- IP20 finger-safe in installed state
- RoHS compliant
- CE

Wiring

- 75°C Cu, 20-16 AWG (0.5 to 1.5 mm²) wire
- Torque 0.56 N•m (5 lb-in)

Packaging

- The CCP2-AUX is packaged individually

Installation technique

- Mounts on the CCP2's right side ONLY and mechanically interlocks with the CCP2 switch handle with provided hardware. The CCP2-AUX CANNOT be mounted on the right front and right side rotary operated versions.

Storage and operating temperature

- -20°C to 75°C (-4°F to 167°F)

Installed on a CCP2-3-xx

Note: CCP2-AUX **CANNOT** be mounted on the right front and right side rotary operated versions.

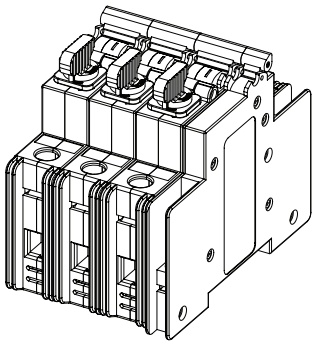

Dimensions — in

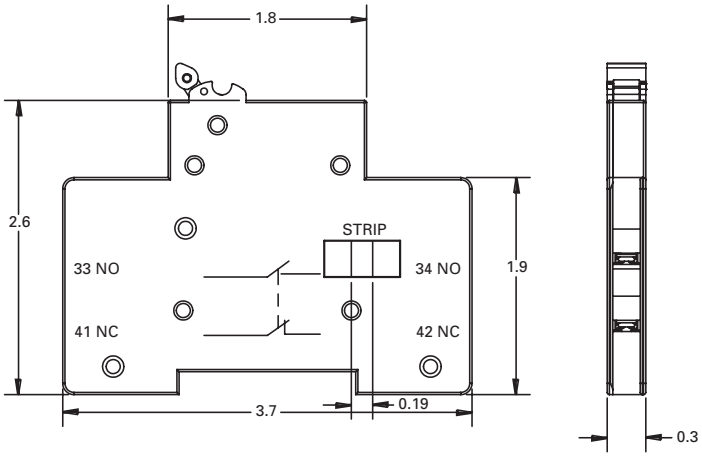

CCP2-AUX auxiliary contacts mounted on a 3-pole CCP2 switch.

PLC fuse monitor

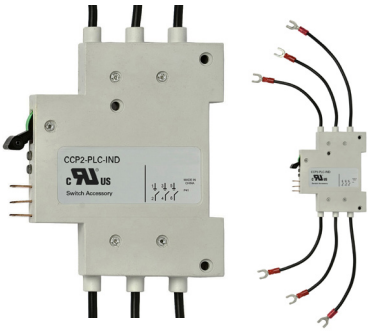

Catalog number

- CCP2-PLC-IND

Description

A resettable three-phase fuse monitor that integrates with the I/O card in a Programmable Logic Controller (PLC). A single unit can be mounted on any 1-, 2- or 3-pole CCP2 switch and the right front/ right side rotary operated switches. A single unit monitors up to three phases. When used on 1- and 2-pole switches unused conductor(s) are removed after installation.

The CCP2-PLC-IND **CANNOT** be mounted on the left front/left side rotary operated versions or if the multi-wire lug kit is installed.

Ratings

- Signal output to PLC*
  - +24 Vdc, 10 mA max
- Output signals
  - Digital 0 Vdc (low), 24 Vdc max (high)
  - 0 Vdc Low – fuse is good
  - 24 Vdc High – fuse has opened

* When the fuse opens, the output signal is sent high and will remain high until the unit is reset.

Emissions and immunity testing

- IEC 60947-1: Voltage Switchgear and Control Gear
- IEC 61000-6-2: Electromagnetic Compatibility (EMC)
  - IEC 61000-4-2: Electrostatic Discharge Immunity - Test at level 3 (6 kV-Contact Discharge) and level 2 (4 kV-Air Discharge)
  - IEC 61000-4-3: Electromagnetic Compatibility - Radiated, Radio-frequency, Electromagnetic Field Immunity test at level x (20 V/m)
  - IEC 61000-4-4: Electromagnetic Compatibility - Testing and Measurement Techniques at level 3 (± 2 kV - Power Port and ±1 kV - I/O Ports)
  - IEC 61000-4-5: Electromagnetic Compatibility - Surge Immunity test at level 4 (±4 kV)
  - IEC 61000-4-6: Immunity to Conducted Disturbances at level 3 (10 V)

Description	Max per CCP2**	Signal output to PLC	Min. circuit volts
Wired remote fuse indication for PLC applications	1 per CCP2 (1, 2- or 3-pole)	24 Vdc/ 10 mA	100 Vac

**The CCP2-PLC-IND CANNOT be mounted on the left front/left side rotary operated versions or if the multi-wire lug kit is installed.

De-energize all circuits and follow all prescribed safety procedures before installing or removing the CCP2-PLC-IND.

Agency information

- UL 98 Recognized, Guide WHTY2, File E155130
- cURus to Canadian, Standard 22.2 No. 4-04

Local indication

- Two distinct LEDs indicate unit power (green) and open fuse (red). Open fuse LED is resettable upon fuse replacement and actuating the reset switch.

Wiring

- For power, signal and ground connections use shielded twisted pair 22-24 AWG (0.34-0.25 mm^2) 300 V rated wire

Packaging

- The CCP2-PLC-IND is packaged individually
- Includes 0.110" (2.8 mm) quick connects for power, signal and ground connections

Installation technique

- Mounts on the left side ONLY of the CCP2 and mechanically interlocks with the CCP2 switch handle with hardware provided. The CCP2-PLC-IND **CANNOT** be mounted on the left front/ left side rotary operated versions or if the multi-wire lug kit is installed.

IP20 rating — yes

Storage and operating temperature

- -20°C to 75°C (-4°F to 167°F)

PLC programming

- The CCP2-PLC-IND signal line is designed to provide a digital input to a PLC I/O card. In this case, a Programmable Logic Control program must be written to properly interpret the input signal to the PLC. The PLC program should check for consecutive high signals before taking action on a critical process.

Installed on a CCP2-3-xx

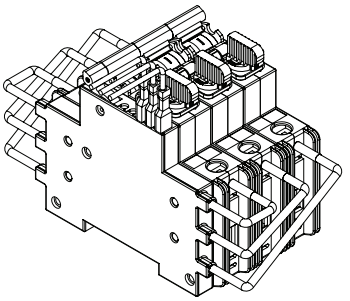

CCP2-PLC-IND mounted on a 3-pole switch and using the fork terminals. When mounted on a 2- or 1-pole switch, remove unused leads.

Note: The CCP2-PLC-IND **CANNOT** be mounted on the left front/left side rotary operated versions or if the multi-wire lug kit is installed.

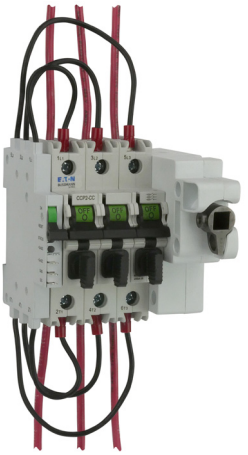

CCP2-PLC-IND fuse monitor mounted on a right front rotary operated switch.

PLC wiring schematic

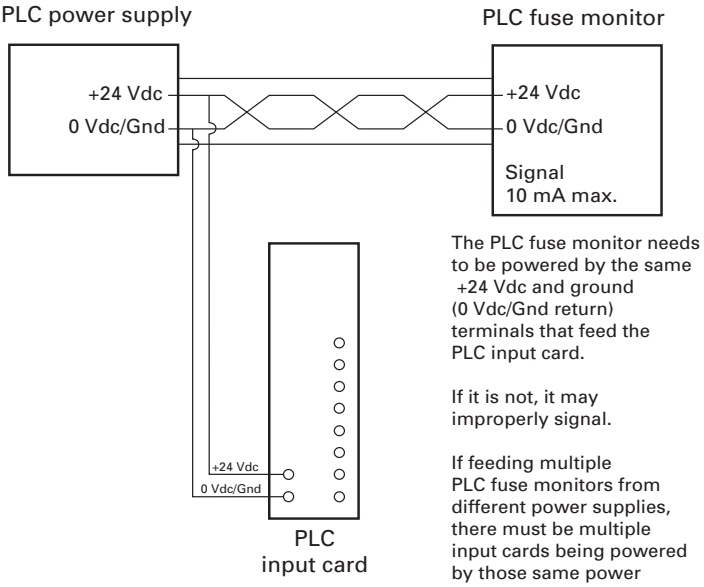

The PLC fuse monitor needs to be powered by the same +24 Vdc and ground (0 Vdc/Gnd return) terminals that feed the PLC input card.

If it is not, it may improperly signal.

If feeding multiple PLC fuse monitors from different power supplies, there must be multiple input cards being powered by those same power supplies as well.

CCP2-PLC-IND connections from a CCP2-3-xx to a remote monitoring device

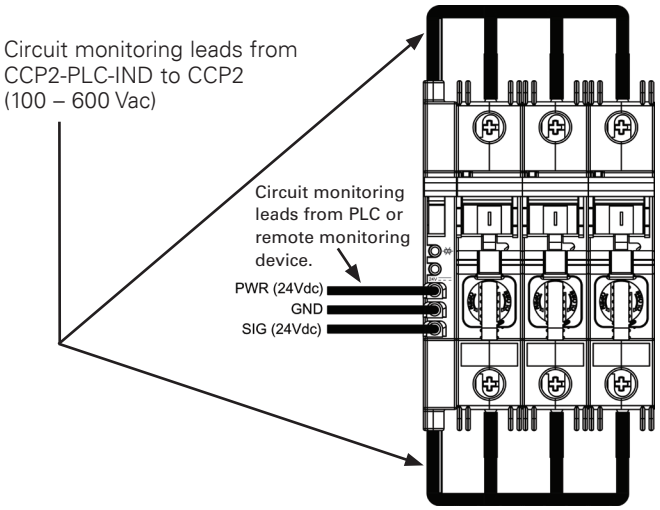

Connection from CCP2-PLC-IND to CCP2-3-xx

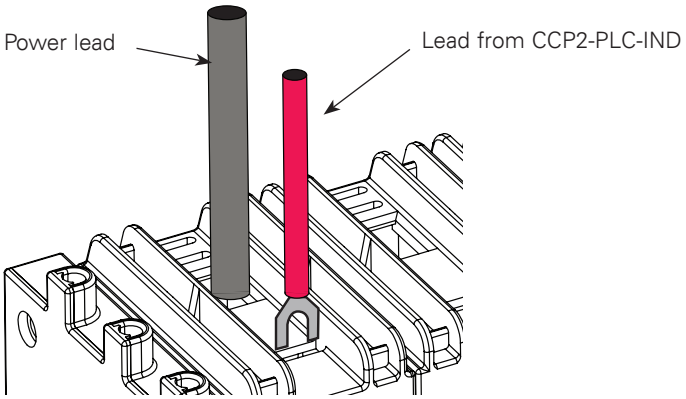

Leads from CCP2-PLC-IND are connected to the fork terminals as shown.

Note: When monitoring a 1- or 2-pole switch, remove unused leads.

Dimensions — in

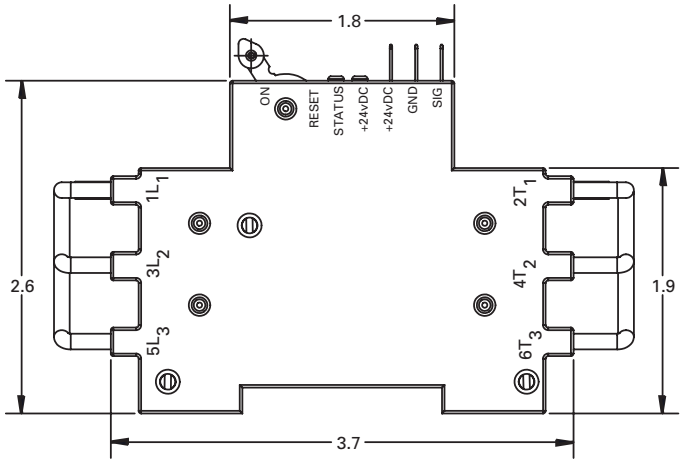

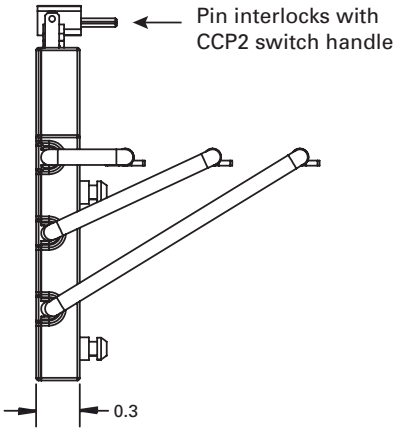

Class CC and UL Supplemental (IEC 10x38) clockwise rotary switches

For a complete assembly, select from the following required and optional components, and accessories.

		Catalog no.		
Required		**Switches**	**Amps**	**Poles**
		Right front rotary		
		CCP2R-2-30CC	30	2
		CCP2R-3-30CC		3
		CCP2R-2-30M		2
		CCP2R-3-30M		3
		Left front rotary		
		CCP2RL-2-30CC	30	2
		CCP2RL-3-30CC		3
		CCP2RL-2-30M		2
		CCP2RL-3-30M		3
		Right side rotary		
		CCP2S-2-30CC	30	2
		CCP2S-3-30CC		3
		CCP2S-2-30M		2
		CCP2S-3-30M		3
		And		
		Rotary handles	**Description**	**NEMA rating**
		CCP2-H4X-B1	Selector handle — black/grey	4X
		CCP2-H4X-R1	Selector handle — red/yellow	
		CCP2-H4X-B2	Pistol handle — black/grey	
		CCP2-H4X-R2	Pistol handle — red/yellow	
		And		
		Shafts (8 mm)	**Length**	
		CCP2-SH1-290	290 mm	
		CCP2-SH1-490	490 mm	
		NFPA 79 compliant handle	**Color**	
		CCP2-NFPA-1	Red	
And				
Optional		**Lug kits**	**Description**	
		CCP2-MW1-3	3-port multi-wire, 75°C Cu/Al, 6-14, includes terminal shrouds, pack of 3	

And			
Accessories		**Terminal shrouds**	**Description**
		CCP2-TS1-3	Pack of 3
		Auxiliary contacts	**Description — cannot be used on right front or right side operated switches**
		CCP2-AUX	NO + NC, 5 A / 240 V
		PLC fuse monitor	**Description — Cannot be used on left front operated switches**
		CCP2-PLC-IND	Signal output 24 Vdc / 10 mA

Class CC and UL Supplemental (IEC 10x38) Switches

For a complete assembly, select from the following required and optional components, and accessories.

		Catalog no.		
		Switches	**Amps**	**Poles**
		Switch		
Required		CCP2-1-30CC	30	1
		CCP2-2-30CC		2
		CCP2-3-30CC		3
		CCP2-1-30M		1
		CCP2-2-30M		2
		CCP2-3-30M		3
And				
Optional		**Lug kits**	**Description**	
		CCP2-MW1-3	3-port multi-wire, 75°C Cu/Al, 6-14, includes terminal shrouds, pack of 3	
And				
Accessories		**Terminal shrouds**	**Description**	
		CCP2-TS1-3	Pack of 3	
		Auxiliary contacts	**Description**	
		CCP2-AUX	NO + NC, 5 A / 240 V	
		PLC fuse monitor	**Description**	
		CCP2-PLC-IND	Signal output 24 Vdc / 10 mA	

Class CC and UL Supplemental (IEC 10x38) counterclockwise switches

For a complete assembly, select from the following required and optional components, and accessories.

Required		**Catalog no.**		
		Switches	**Amps**	**Poles**
		Left side rotary		
		CCP2SL-2-30CC	30	2
		CCP2SL-3-30CC		3
		CCP2SL-2-30M		2
		CCP2SL-2-30M		2
		And		
		Rotary handles	**Description**	**NEMA rating**
		CCP2-H4X-B1L	Selector handle — black/grey	4X
		CCP2-H4X-R1L	Selector handle — red/yellow	
		CCP2-H4X-B2L	Pistol handle — black/grey	
		CCP2-H4X-R2L	Pistol handle — red/yellow	
		And		
		Shafts (8 mm)	**Length**	
		CCP2-SH1-290	290 mm	
		CCP2-SH1-490	490 mm	
And				
Optional		**Lug kits**	**Description**	
		CCP2-MW1-3	3-port multi-wire, 75°C Cu/Al, 6-14, includes terminal shrouds, pack of 3	
And				
Accessories		**Terminal shrouds**	**Description**	
		CCP2-TS1-3	Pack of 3	
		Auxiliary contacts	**Description —mounts on right side**	
		CCP2-AUX	NO + NC, 5 A / 240 V	

CCPLP UL 98 Listed low profile Compact Circuit Protector

RoHS 2011/65/EU

The revolutionary Bussmann series low profile Compact Circuit Protector (CCPLP) is a UL 98/508 Listed fused disconnect switch. This front panel mount switch is available in 1-, 2- and 3-pole versions, and has the smallest footprint of any fused disconnect switch. It features an SCCR up to 200 kA to help improve equipment SCCR.

Four fuse types

The CCPLP is available for UL Class CC and G, UL supplemental (13/32″ x 1-1/2″) and IEC 10x38 mm fuses.

Class CC and G versions are easily selectively coordinated with the upstream Bussmann series CUBEFuse™ using published fuse ampacity ratio tables.

Design/application flexibility

The CCPLP is easily integrated into many panel designs and provides a high SCCR alternative to low profile circuit breakers on the market.

Ratings

- Volts
  - 600 Vac (Class CC up to 30 A, Class G 20 A)
  - 550 Vac (10x38mm IEC Class aM 0.16-16 A)
  - 500 Vac (10x38mm IEC Class gG 0.5-25 A)
  - 400 Vac (10x38mm IEC Class aM 20-32 A, gG 32 A)
  - 240 Vac (13/32″ x 1-1/2″ UL supplemental 30 A)
- Amps
  - Up to 30 A (UL)
  - Up to 32 A (IEC)
- SCCR
  - 200 kA (Class CC)
  - 120 kA (10x38mm IEC Class gG and aM)
  - 100 kA (Class G)
  - 10 kA (13/32″ x 1-1/2″ UL supplemental)
- Frequency 50/60 Hz
- Impulse voltage 8 kV

Terminals and conductors 75°C/90°C Cu

- Screw terminal, 10-32 phil-slot screw with external tooth lock washer (use with properly rated/UL Listed ring or fork terminal)
- Pressure plate terminal, 10-32 phil-slot screw (single 22-6 AWG solid or stranded)

Ambient storage and operating temperature

- -20 to 90°C, 85% relative humidity, non-condensing

Poles

1-, 2- and 3-pole factory configured*

* 2- and 3-pole versions supplied as ganged switches with phase barriers.

Agency information

- Class G fuse versions
  - UL 98 Listed, Guide WHTY, File E302370
  - IEC 60947-3 AC-23A
- Class CC fuse versions
  - UL 98 Listed, Guide WHTY, File E302370
  - cULus to Canadian Standard 22.2 No. 4-04, Guide WHTY7, File E302370
  - IEC 60947-3 AC-23A
- UL supplemental and IEC 10x38mm fuse versions
  - UL 508 Listed, Guide NRNT, File E320230
  - cULus Listed to Canadian Standard 22.2 No. 14-05, Guide NRNT7, File E320230
  - IEC 60947-3 AC-23A
- RoHS compliant
- CE

Safety

- Finger-safe IP20 from panel front

Mounting

- Front panel mounting with customer supplied M3 screws

Open fuse indication*

- Local open fuse indication provided for each pole by an orange neon lamp (minimum 90 V)

* Open fuse indication requires an energized, closed circuit with an open fuse in the CCPLP and the switch in the ON position.

Lockout/tagout provision

- Brady pin-out device, part number 90844

Circuit labeling provision

- Accepts up to two universal marker labels, catalog number TM26CB

Carton quantity

- 12 poles (1-pole: 12 units, 2-pole: 6 units, 3-pole: 4 units)

Minimum enclosure size

- 6″ x 6″ x 4″ per UL 98 Listing

Data sheet no.10372

Available CCPLP versions

Catalog no.					SCCR	Horsepower (Vac)			
Screw terminal	Pressure plate terminal	Poles	Volts AC	Amps	(kA)	120	240	480	600
UL Class G fuse									
CCPLP-1-20G-S	CCPLP-1-20G-P	1				—	—	—	—
CCPLP-2-20G-S	CCPLP-2-20G-P	2	600	20	100	—	—	—	—
CCPLP-3-20G-S	CCPLP-3-20G-P	3				—	—	—	—
UL Class CC fuses									
CCPLP-1-30CC-S	CCPLP-1-30CC-P	1				0.5	—	—	—
CCPLP-2-30CC-S	CCPLP-2-30CC-P	2	600	30	200	—	2	—	—
CCPLP-3-30CC-S	CCPLP-3-30CC-P	3				—	3	4	7. 5
UL 13/32"x1-1/2" midget fuses									
CCPLP-1-30M-S	CCPLP-1-30M-P	1				—	—	—	—
CCPLP-2-30M-S	CCPLP-2-30M-P	2	240	30	10	—	—	—	—
CCPLP-3-30M-S	CCPLP-3-30M-P	3				—	—	—	—
IEC 10x38 gG and aM fuses									
CCPLP-1-30M-S	CCPLP-1-30M-P	1	gG fuses: up to 25 A @ 500 V 32 A @ 400 V		120	—	—	—	—
CCPLP-2-30M-S	CCPLP-2-30M-P	2	aM fuses: up to 16 A @ 550 A 20-23 A @ 400V		120	—	—	—	—
CCPLP-3-30M-S	CCPLP-3-30M-P	3			120	—	—	—	—

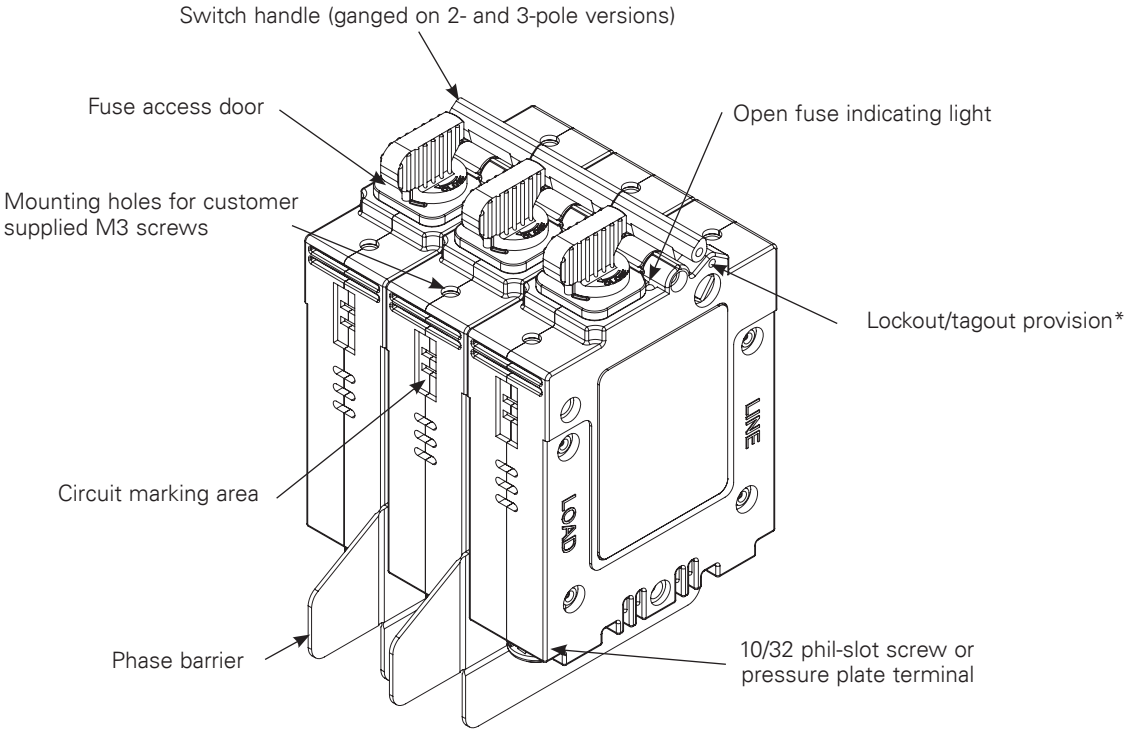

* Use Brady pin-out device, P/N 90844

Available Bussmann series fuses

Fuse class	Catalog symbol
CC	FNQ-R, KTK-R, LP-CC
G	SC
M	BAF, FNM, FNQ, KLM, KTK
gG	C10G
aM	C10M

Data sheet no.10372

UL 98 fused disconnect switches up to 800 A

Bussmann series UL 98 and UL 489 fused disconnect switches "break" and "make" power circuits ON and OFF load.

The switches employ double break contacts per pole that help ensure complete isolation of the fuse when the switch is in the "OFF" position.

Agency information

- UL 98, Guide WHTY, File E155130
- UL 489, Guide WJAZ, File E359801
- CSA 22.2 No. 4, File 257020
- Conforms with IEC 60947-3
- NFPA 79

Features

- Make and break power under load
- Double break by pole
- 30-60 A DIN-Rail or panel mount, 100-800 A panel mount only
- Up to 200 kA short-circuit current rating
- Finger-safe covers
- Compact footprints available
- Defeatable handles automatically re-latch when the panel door is closed
- Most disconnect switches are front, right side, flange or direct handle operable
- NFPA 79 compliant handle kits

Online resources available at Eaton.com/bussmannseries

- CAD drawings
- Instruction sheets
- UL information

Available Bussmann series fuses

Fuse class	Catalog symbol/type
CC	LP-CC time-delay, current limiting
	FNQ-R time-delay
	KTK-R fast-acting
J	LPJ time-delay, current limiting
	JKS fast-acting fuses
	DFJ high speed drive fuse
L	KRP-C time-delay, current limiting
	KTU fast-acting
	KLU time-delay
	KRP-CL (225-600 A)

UL 98 fused disconnect switches — 30 to 800 A

RDF30CC-3

RDF30J-3 / RDF60J-3-COMP

RDF60J-3

RDF200J-3

RDF600J-3

Poles		Catalog no.									
2-pole		**—**	**—**	**RDF30J-2**	**RDF60J-2-COMP**	**RDF60J-2**	**RDF100J-2**	**RDF200J-2**	**RDF400J-2**	**RDF600J-2**	**RDF800L-2**
3-pole		**RDF30CC-3**	**RDF30J-3-COMP**	**RDF30J-3**	**RDF60J-3-COMP**	**RDF60J-3**	**RDF100J-3**	**RDF200J-3**	**RDF400J-3**	**RDF600J-3**	**RDF800L-3**
3-pole + neutral		**RDF30CC-3N**	**RDF30J-3N-COMP**	**—**	**—**	**—**	**—**	**—**	**—**	**—**	**—**
4-pole		**—**	**—**	**RDF30J-4**	**RDF60J-4-COMP**	**RDF60J-4**	**RDF100J-4**	**RDF200J-4**	**RDF400J-4**	**RDF600J-4**	**RDF800L-4**
UL standard		UL 489	UL 489	UL 98	UL 98	UL 98	UL 98	UL 98	UL 98	UL 98	UL 98
Fuse class		CC	J	J	J	J	J	J	J	J	L
Max fuse/ampacity		30	30	30	60	60	100	200	400	600	800
Switch type		Compact	Compact	Standard	Compact	Standard	Standard	Standard	Standard	Standard	Standard
Handle operation		Front	Front	Front/Side	Front/Side	Front/Side	Front/Side , Flange	Front/Side , Flange	Front/Side , Flange	Front , Flange	Front , Flange
UL electrical ratings											
Max AC volts		600 Vac	600 Vac	600 Vac	600 Vac	600 Vac	600 Vac	600 Vac	600 Vac	600 Vac	600 Vac
Max DC volts*		—	—	250 Vdc	250 Vdc	250 Vdc	250 Vdc	—	250 Vdc	600 Vdc	600 Vdc
Std. AC Hp ratings	1-phase, 240	—	—	3	10	10	10	10	10	—	—
	3-phase, 240	3	3	3	7.5	7.5	15	25	50	75	75
	3-phase, 480	5.0	5.0	5.0	15	15	25	50	100	150	200
	3-phase, 600	7.5	7.5	7.5	15	15	30	60	125	200	250
Max. AC Hp ratings	3-phase, 240	7.5	7.5	7.5	15	15	30	60	125	200	200
	3-phase, 480	15	15	15	30	30	60	125	250	400	500
	3-phase, 600	20	20	20	50	50	75	150	350	500	500
DC Hp ratings	125 Vdc	—	—	3	5	5	7.5	—	20	—	—
	250 Vdc	—	—	5	10	10	20	—	50	—	—
Electrical characteristics											
SCCR		100 kA	100 kA	200 kA	100 kA	200 kA	200 kA	200 kA	200 kA	200 kA	200 kA
Terminal lugs/kits		Integral	Integral	Integral	Integral	Integral	Integral	•	•	•	•
Mounting torque - lb-in (N•m)		—	—	—	—	—	—	160 (18)	310 (35)	310 (35)	310 (35)
Wire type		75°C Cu	75°C Cu	75°C Cu	75°C Cu	75°C Cu	75°C Cu	75°C Cu/ Al	75°C Cu/ Al	75°C Cu/ Al	75°C Cu/ Al
Wire range, torque - lb-in (N•m)	Solid	14-10, 27 (3.1)	14-10, 27 (3.1)	14-10, 31 (3.5)	14-10, 31 (3.5)	12-10, 35.4 (4)	12-10, 35.4 (4)	—	—	—	—
	Stranded	14-10 27 (3.1)	14-10 27 (3.1)	14-6 , 31 (3.5)	14-6, 31 (3.5)	12-1, 35.4 (4)	12-1, 35.4 (4)	6-300 kcmil, 275 (31)	4-600 kcmil, 550 (62), Dual 1/0-250 kcmil 550 (62)	(2) 2-600 kcmil, 375 (42.4)	(2) 2-600 kcmil, 375 (42.4)
Mechanical characteristics											
Endurances/cycles		10,000	10,000	10,000	10,000	10,000	10,000	8000	6000	5000	5000
Physical characteristics											
Dimensions		See drawings on product pages									
Weight - lbs (kg)	2-pole	—	—	3.0 (1.3)	3.1 (1.4)	4.1 (1.8)	4.1 (1.8)	5.7 (2.6)	11.4 (5.2)	31.7 (14.4)	31.7 (14.4)
	3-pole	1.3 (0.6)	1.4 (0.6)	3.8 (1.7)	4.1 (1.8)	5.3 (2.4)	5.3 (2.4)	7.8 (3.5)	16.6 (7.6)	44.2 (20.1)	44.2 (20.1)
	3-pole + neutral	1.4 (0.6)	1.5 (0.7)	—	—	—	—	—	—	—	—
	4-pole	—	—	4.7 (2.1)	4.8 (2.2)	6.49 (2.9)	6.49 (2.9)	10.8 (4.9)	21.8 (9.9)	56.8 (25.8)	56.8 (25.8)
Environmental											
Operating temp. range		-20-70°C	-20-70°C	-20-70°C	-20-70°C	-20-70°C	-20-70°C	-20-70°C	-20-70°C	-20-70°C	-20-70°C
Flammability rating		UL 94-V0	UL 94-V0	UL 94-V0	UL 94-V0	UL 94-V0	UL 94-V0	UL 94-V0	UL 94-V0	UL 94-V0	UL 94-V0
Accessories											
Lug Kit		Integral	Integral	Integral	Integral	Integral	Integral	•	•	•	•
Handles	Direct	•	•	•	•	•	•	•	•	•	•
	Front selector	•	•	—	—	—	—	—	—	—	—
	Front pistol	•	•	•	•	•	•	•	•	•	•
	Side pistol	—	—	•	•	•	•	•	•	—	—
Flange	Cable	—	—	•	•	•	•	•	—	—	—
	Shaft	—	—	•	•	•	•	•	—	—	—
NFPA through door handle		•	•	•	•	•	•	•	•	•	•
Shafts c/s - mm		5x5	5x5	10x10	10x10	10x10	10x10	10x10	10x10	12X12	12X12
Terminal shrouds		Not Required	Not Required	Not Required	Not Required	Not Required	Not Required	•	•	•	•
Auxiliary contacts	(1) NO	•	•	•	•	•	•	•	•	•	•
	(1) NC	•	•	•	•	•	•	•	•	•	•
AC ratings	Volts	600	600	600	600	600	600	600	600	600	600
	Amps	10	10	10	10	10	10	10	10	10	10

• Available, see product page for details and catalog numbers.
— Not available.
* General purpose only, not photovoltaic rated.

UL 98 fused rotary disconnect switches — 30 A

Standard 30 amp Class CC and compact 30 amp Class J

For a complete assembly, select:

Select for standard applications

Switch

Switch

Amps	Fuse class	Poles	SCCR (kA)	Max Hp rating, 3-phase 220/240	440/480	600	Conductor AWG size /type	Catalog no.
30	CC	3	100	7.5	15	20	14-10 Sol/Str 75°C Cu	RDF30CC-3
30		3 + Ntrl.*	100	7.5	15	20		RDF30CC-3N
30	J	3	100	7.5	15	20		RDF30J-3-COMP
30		3 + Ntrl.*	100	7.5	15	20		RDF30J-3N-COMP

* Neutral is switched.

Plus

Handle

Direct mount handle - mounts directly to switch, no shaft required

For switch cat. no.	Color	Test function	Padlockable	Catalog no.
RDF30CC-_	Black	Y	Y	DIR-05
RDF30J-_-COMP				DIR-06

OR

+

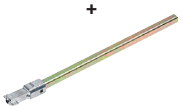

External front operated selector handle - shaft required

NEMA type	Color	Test function	Padlockable	Defeatable	Catalog no.
1, 3R, 4, 4X, 12	Black	N	Y	Y	H4X-04B
1, 3R, 4, 4X, 12	Red/yellow				H4X-04R

Shafts for selector handles

Length - in (mm)	Mounting depth (X) - in (mm)	Catalog no.
7.9 (200)	4.02~9.65 (102~245)	SH1-200
12.6 (320)	4.02~14.37 (102~365)	SH1-320
15.7 (400)	4.02~17.52 (102~445)	SH1-400

OR

or

+

External front operated pistol handles - shaft required

NEMA type	Color	Test function	Padlockable	Defeatable	Catalog no.
1, 3R, 12	Black	N	Y	Y	H12-05B
1, 3R, 12	Red/yellow				H12-05R
1, 3R, 4, 4X, 12	Black				H4X-05B
1, 3R, 4, 4X, 12	Red/yellow				H4X-05R
1, 3R, 4, 4X, 12	Black	Y			H4X-05TB
1, 3R, 4, 4X, 12	Red/yellow				H4X-05TR

Metallic hasp (heavy duty) external front operated pistol handles - shaft required

NEMA type	Color	Test function	Padlockable	Defeatable	Catalog no.
1, 3R, 4, 4X, 12	Black	N	Y	Y	H4X-05BHD
1, 3R, 4, 4X, 12	Red/yellow				H4X-05RHD

Shafts for pistol handles

Length - in (mm)	Mounting depth (X) - in (mm)	Catalog no.
7.9 (200)	4.02~9.65 (102~245)	SH2-200
12.6 (320)	4.02~14.37 (102~365)	SH2-320
15.7 (400)	4.02~17.52 (102~445)	SH2-400

OR

NFPA through the door handle kit - to be used with front pistol handle

Color	Test function	Padlockable	Defeatable	Catalog no.
Red	N	Y	N	H79-1

AND...

Accessories

Auxiliary contacts

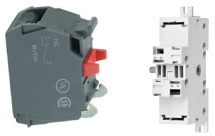

1 2

Auxiliary contacts

Contact type	No. of contacts	Continuous amp rating	Voltage (Vac)	Maximum number of auxiliary contacts per disconnect switch catalog number	Catalog no.
NO	1	10	600	RDF30CC-_: 4 / 8 with BAC-HOLDER2 BAC05 (1) RDF30J-_-COMP: 2 /6 with BAC-HOLDER2	BAC05 (1)
NC					BAC06 (1)
Auxiliary contact holder				Accepts 4 Auxiliary contacts: BAC05 or BAC06	BAC-HOLDER2 (2)

Dimensions — in (mm)

RDF30CC-_

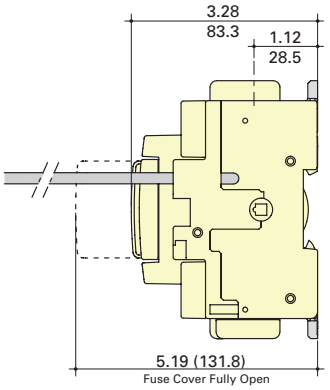

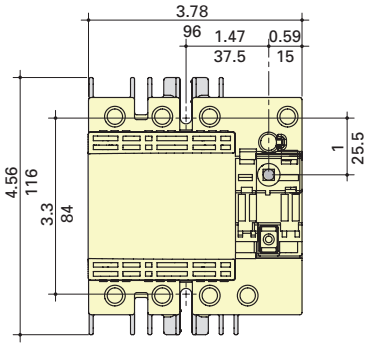

RDF30J-_-COMP

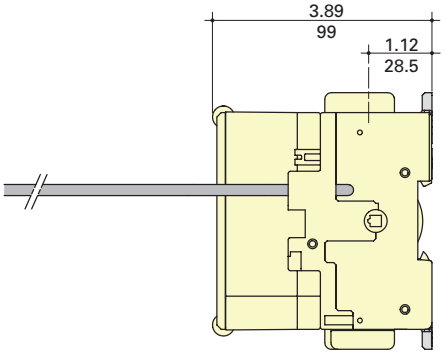

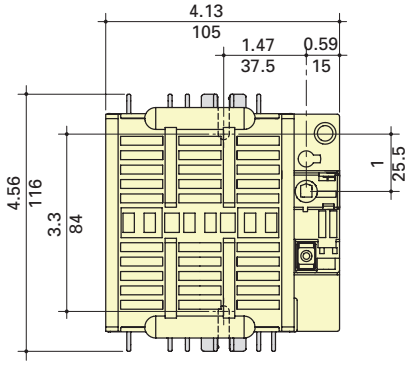

External front selector handle

Selector handle type

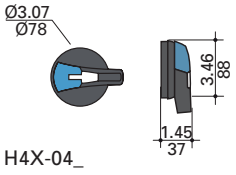

Direction of front operation

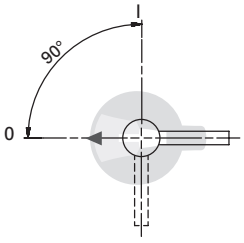

Door drilling layout

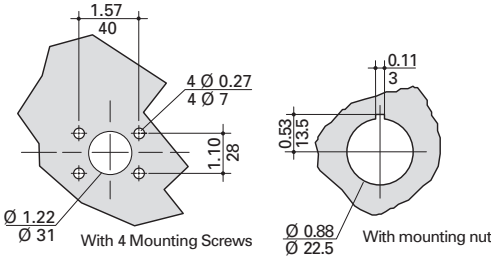

External front pistol handles

Pistol handle type

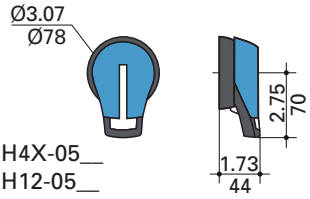

Direction of front operation

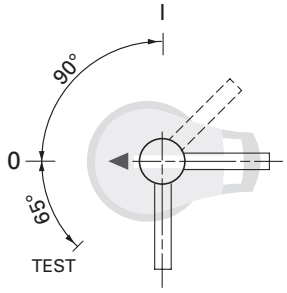

Door drilling layout

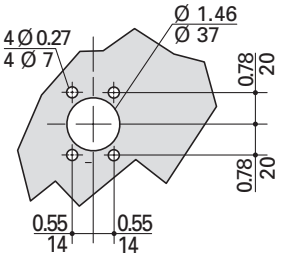

Standard 30 amp Class J

For a complete assembly, select:

Switch

Amps	Fuse class	Poles	SCCR (kA)	Max horsepower rating 1-phase 220/240	1-phase 220/240	3-phase 440/480	3-phase 600	DC* 125	DC* 250	Conductors AWG size / type	Catalog no.
30	J	2	200	3	-	-	-	3	5	14-10 Sol/14-6 Str 75°C Cu	RDF30J-2
		3		-	7.5	15	20	3	5		RDF30J-3
		4		-	7.5	15	20	3	5		RDF30J-4

* DC ratings use two poles in series.

PLUS

Direct mount handle - mounts directly to switch, no shaft required

For switch cat. no.	Color	Test function	Padlockable	Catalog no.
All switches	Black	Y	Y - On switch	DIR-07

OR

External front operated pistol handles - shaft required

NEMA type	Color	Test function	Padlockable	Defeatable	Catalog no.
1, 3R, 12	Black	N	Y	Y	H12-05B
	Red/yellow				H12-05R
1, 3R, 4, 4X, 12	Black				H4X-05B
	Red/yellow				H4X-05R
	Black	Y			H4X-05TB
	Red/yellow				H4X-05TR

Or

Metallic hasp (heavy duty) external front operated pistol handles - shaft required

NEMA type	Color	Color	Test function	Padlockable	Defeatable	Catalog no.
1, 3R, 4, 4X, 12		Black	N	Y	Y	H4X-05BHD
		Red/yellow				H4X-05RHD

External right side operated pistol handles - shaft required

NEMA type	Color	Test function	Padlockable	Defeatable	Catalog no.
1, 3R, 4, 4X, 12	Black	N	Y	N/A	H4X-05SB
	Red/yellow				H4X-05SR

\+

Shafts for pistol handles

Length — in (mm)	Mounting depth (X) — in (mm)	Catalog no.
7.9 (200)	5.30~9.06 (135~230)	SH5-200
12.6 (320)	5.30~13.78 (135~350)	SH5-320
15.7 (400)	5.30~16.93 (135~430)	SH5-400

OR

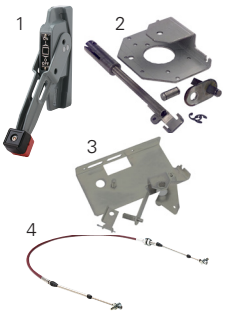

Flange handle (1) - requires shaft operated mechanism or cable operated mechanism + cable

NEMA type	Flange style	Test function	Padlockable	Defeatable	Catalog no.
1, 3R, 4, 12	Standard	N	Y	Y	FLH1
1, 3R, 4, 4X, 12	Chrome plated				FLH2

Shaft operated flange mechanism (2) - includes shaft

For enclosure depth - in (mm)	Catalog no.
6~24 (152~613)	FLRM

Cable operated flange mechanism and cable - must select mechanism (3) and cable (4)

Item / length — in (mm)	Catalog no.
Cable mechanism	FLCM
36 (900) cable	FLC36
60 (1500) cable	FLC60
120 (3000) cable	FLC120

OR

NFPA through the door handle kit - to be used with front pistol handle

Color	Test function	Padlockable	Defeatable	Catalog no.
Red	N	Y	N	H79-2

AND...

Auxiliary contacts

Contact type	No. of contacts	Continuous amp rating	Voltage (Vac)	Max. aux contacts per switch	Catalog no.
NO	1	10	600	4	BAC05
NC					BAC06

Dimensions — in (mm)

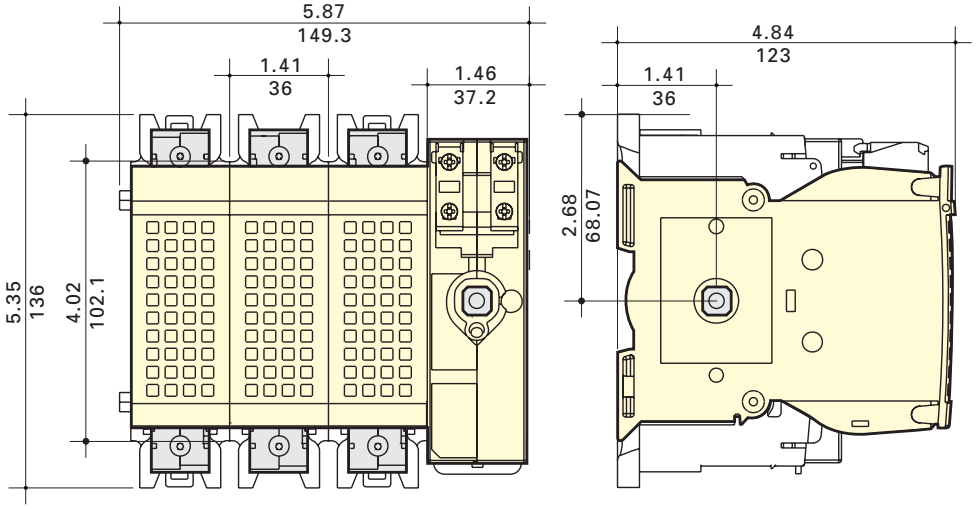

Direct mount handle

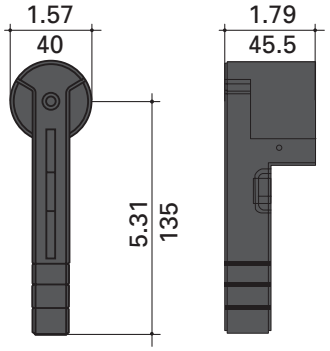

DIR-07

Flange handle

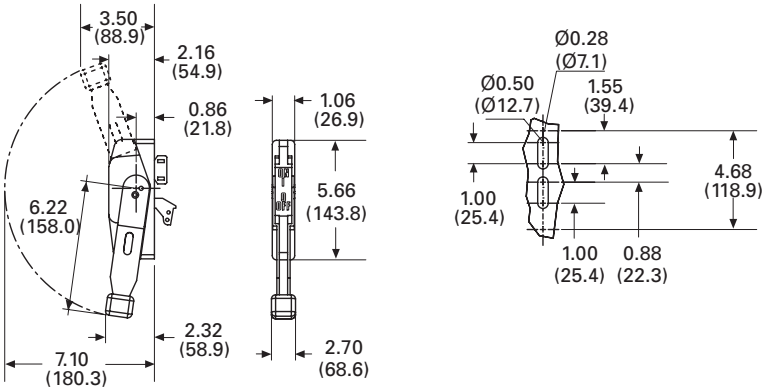

FLH_

External front and right side pistol handle

Handle type | Direction of front operation | Direction of right side operation | Door drilling layout

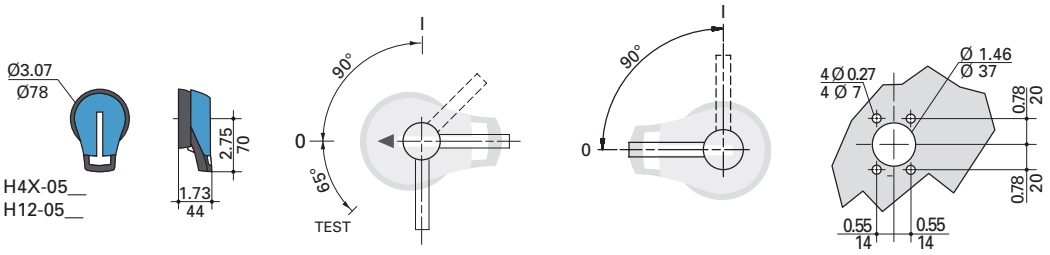

Compact 60 amp Class J

For a complete assembly, select:

Select for standard applications

Switch

Switch

Amps	Fuse class	Poles	SCCR (kA)	Max horsepower rating: 1-phase 220/240	3-phase 220/240	3-phase 440/480	3-phase 600	DC* 125	DC* 250	Conductor AWG size / type	Catalog no.
60	J	2	100	10	-	-	-	5	10	14-10 Sol/14-6 Str 75°C Cu	RDF60J-2-COMP
		3		-	15	30	50	5	10		RDF60J-3-COMP
		4		-	15	30	50	5	10		RDF60J-4-COMP

* DC ratings use two poles in series.

PLUS

Handle

Direct mount handle - mounts directly to switch, no shaft required

For switch cat. no.	Color	Test function	Padlockable	Catalog no.
All switches	Black	Y	Y - on switch	DIR-07

OR

External front operated pistol handles - shaft required

NEMA type	Color	Test function	Padlockable	Defeatable	Catalog no.
1, 3R, 12	Black	N	Y	Y	H12-05B
1, 3R, 12	Red/yellow				H12-05R
1, 3R, 4, 4X, 12	Black				H4X-05B
1, 3R, 4, 4X, 12	Red/yellow				H4X-05R
1, 3R, 4, 4X, 12	Black	Y			H4X-05TB
1, 3R, 4, 4X, 12	Red/yellow				H4X-05TR

Or

Metallic hasp (heavy duty) external front operated pistol handles - shaft required

NEMA type	Color	Test function	Padlockable	Defeatable	Catalog no.
1, 3R, 4, 4X, 12	Black	N	Y	Y	H4X-05BHD
1, 3R, 4, 4X, 12	Red/yellow				H4X-05RHD

External right side operated pistol handles - shaft required

NEMA type	Color	Test function	Padlockable	Defeatable	Catalog no.
1, 3R, 4, 4X, 12	Black	N	Y	N/A	H4X-05SB
1, 3R, 4, 4X, 12	Red/yellow				H4X-05SR

+

Shafts for pistol handles

Length — in (mm)	Mounting depth (X) - in (mm)	Catalog no.
7.9 (200)	5.30~9.06 (135~230)	SH5-200
12.6 (320)	5.30~13.78 (135~350)	SH5-320
15.7 (400)	5.30~16.93 (135~430)	SH5-400

OR

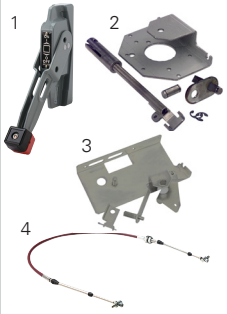

Flange handle (1) - requires shaft operated mechanism or cable operated mechanism + cable

NEMA type	Flange style	Test function	Padlockable	Defeatable	Catalog no.
1, 3R, 4, 12	Standard	N	Y	Y	FLH1
1, 3R, 4, 4X, 12	Chrome plated				FLH2

Shaft operated flange mechanism (2) - includes shaft

For enclosure depth - in (mm)	Catalog no.
6~24 (152~613)	FLRM

Cable operated flange mechanism and cable - must select mechanism (3) and cable (4)

Item / length — in (mm)	Catalog no.
Cable mechanism	FLCM
36 (900) cable	FLC36
60 (1500) cable	FLC60
120 (3000) cable	FLC120

OR

NFPA through the door handle kit - to be used with selector handle or front pistol handle

Color	Test function	Padlockable	Defeatable	Catalog no.
Red	N	Y	N	H79-2

AND...

Accessories

Aux. contacts

Auxiliary contacts

Contact type	No. of contacts	Continuous amp rating	Voltage (Vac)	Max. aux contacts per switch	Catalog no.
NO	1	10	600	4	BAC05
NC					BAC06

Dimensions — in (mm)

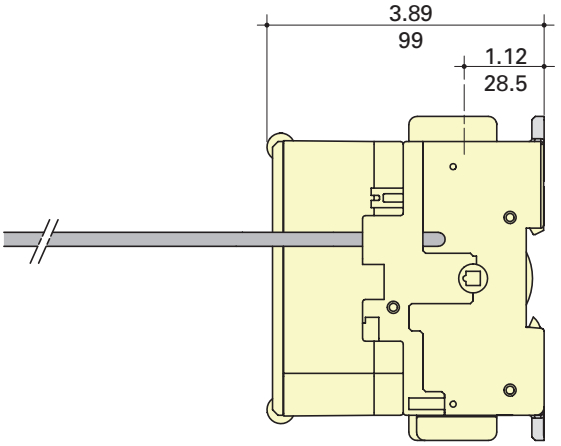

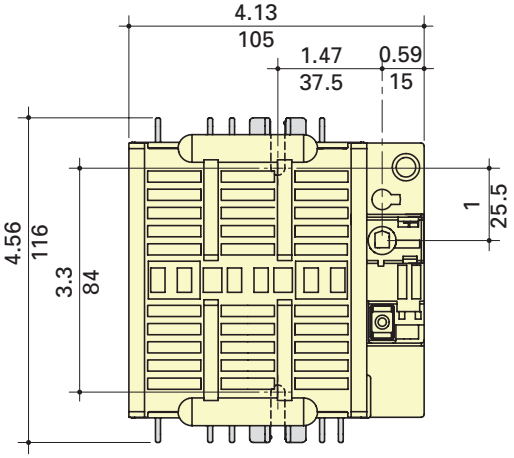

Direct mount handle

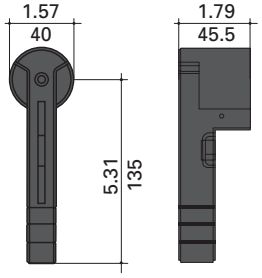

DIR-07

Flange handle

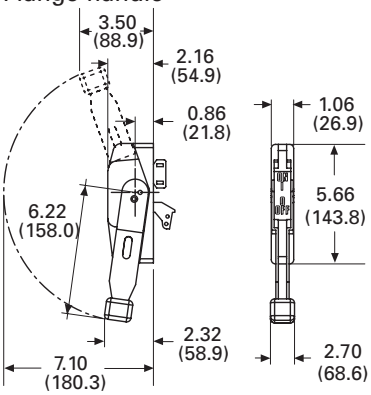

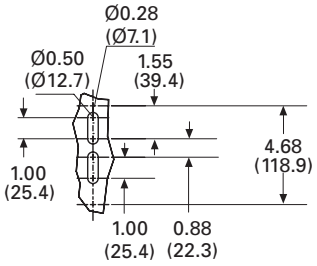

FLH_

External front and right side pistol handle

Handle type	Direction of front operation	Direction of right side operation	Door drilling layout

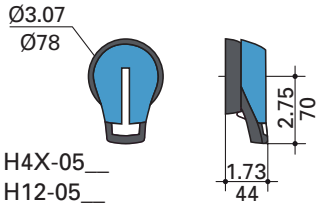

H4X-05__
H12-05__

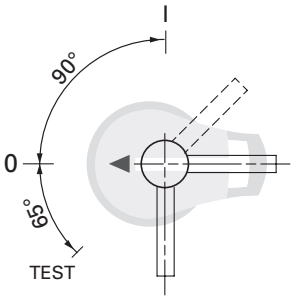

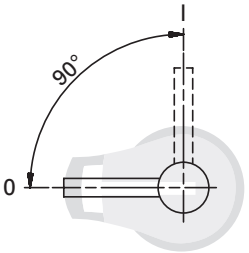

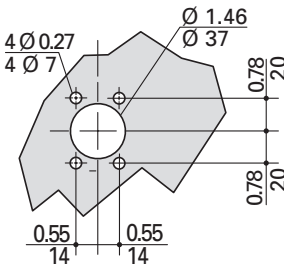

Standard 60 amp Class J

For a complete assembly, select:

Select for standard applications

Switch

Switch

Amps	Fuse class	Poles	SCCR (kA)	Max horsepower rating: 1-phase 220/240	3-phase 220/240	3-phase 440/480	3-phase 600	DC* 125	DC* 250	Conductor AWG size/type	Catalog no.
60	J	2	200	10	-	-	-	5	10	12-10 Sol/12-1 Str 75°C Cu	RDF60J-2
		3	200	-	15	30	50	5	10		RDF60J-3
		4	200	-	15	30	50	5	10		RDF60J-4

* DC ratings use two poles in series.

PLUS

Handle

Direct mount handle - mounts directly to switch, no shaft required

For switch cat. no.	Color	Test function	Padlockable	Catalog no.
All switches	Black	Y	Y	DIR-07

OR

External front operated pistol handles - shaft required

NEMA type	Color	Test function	Padlockable	Defeatable	Catalog no.
1, 3R, 12	Black	N	Y	Y	H12-03B
1, 3R, 12	Red/yellow				H12-03R
1, 3R, 4, 4X, 12	Black				H4X-06B
1, 3R, 4, 4X, 12	Red/yellow				H4X-06R
1, 3R, 4, 4X, 12	Black	Y			H4X-06TB
1, 3R, 4, 4X, 12	Red/yellow				H4X-06TR

Or

Metallic hasp (heavy duty) external front operated pistol handles - shaft required

NEMA type	Color	Test function	Padlockable	Defeatable	Catalog no.
1, 3R, 4, 4X, 12	Black	N	Y	Y	H4X-06BHD
1, 3R, 4, 4X, 12	Red/yellow				H4X-06RHD

External right side operated pistol handles - shaft required

NEMA type	Color	Test function	Padlockable	Defeatable	Catalog no.
1, 3R, 4, 4X, 12	Black	N	Y	N/A	H4X-06SB
1, 3R, 4, 4X, 12	Red/yellow				H4X-06SR

+

Shafts for pistol handles

Length — in (mm)	Mounting depth (X) — in (mm)	Catalog no.
7.9 (200)	5.30~9.06 (135~230)	SH5-200
12.6 (320)	5.30~13.78 (135~350)	SH5-320
15.7 (400)	5.30~16.93 (135~430)	SH5-400

OR

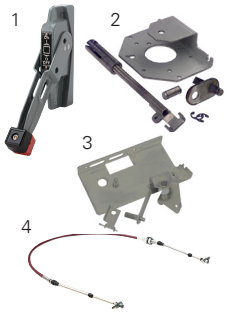

Flange handle (1) - requires shaft operated mechanism or cable operated mechanism + cable

NEMA type	Flange style	Test Function	Padlockable	Defeatable	Catalog no.
1, 3R, 4, 12	Standard	N	Y	Y	FLH1
1, 3R, 4, 4X, 12	Chrome plated				FLH2

Shaft operated flange mechanism (2) - includes shaft

For enclosure depth — in (mm)	Catalog no.
6~24 (152~613)	FLRM

Cable operated flange mechanism and cable - must select mechanism (3) and cable (4)

Item / length — in (mm)	Catalog no.
Cable mechanism	FLCM
36 (900) cable	FLC36
60 (1500) cable	FLC60
120 (3000) cable	FLC120

OR

NFPA through the door handle kit - to be used with front pistol handle

Color	Test function	Padlockable	Defeatable	Catalog no.
Red	N	Y	N	H79-2

AND...

Accessories

Aux. contacts

Auxiliary contacts

Contact type	No. of contacts	Continuous amp rating	Voltage (Vac)	Max number of aux contacts per switch	Catalog no.
NO	1	10	600	4	BAC05
NC					BAC06

Dimensions — in (mm)

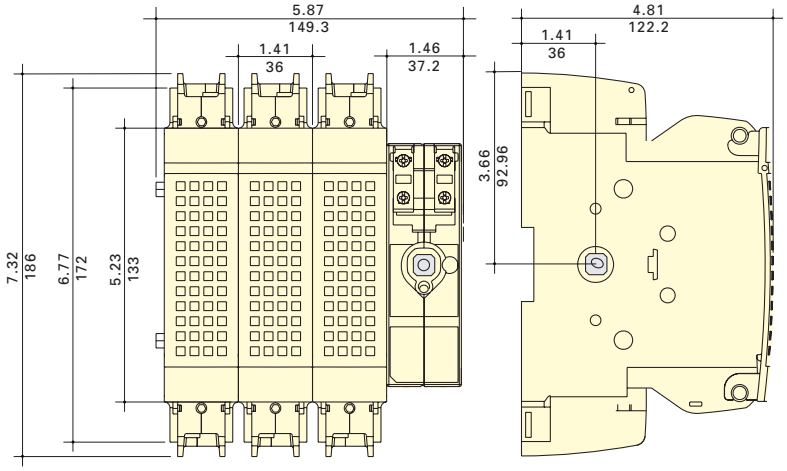

Direct mount handle

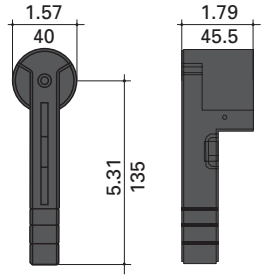

DIR-07

Flange handle

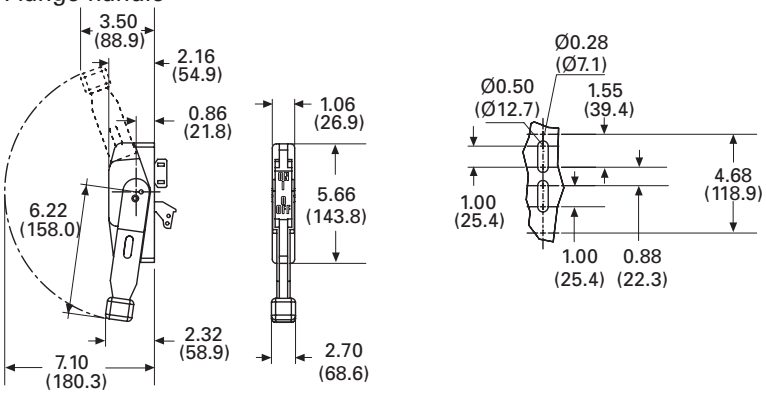

FLH_

External front and right side pistol handle

Handle type

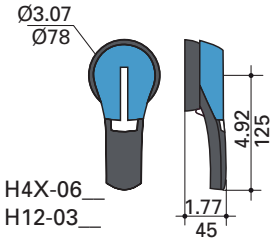

H4X-06__
H12-03__

Direction of front operation

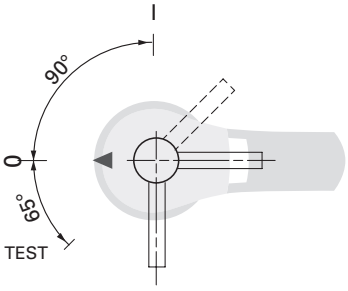

Direction of right side operation

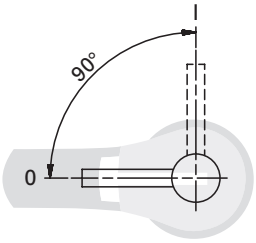

Door drilling layout

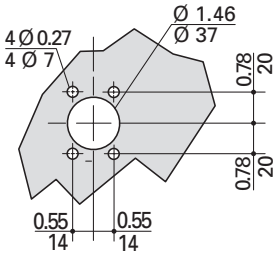

Standard 100 amp Class J

For a complete assembly, select:

Select for standard applications

Switch

Switch

Amps	Fuse class	Poles	SCCR (kA)	Max horsepower rating: 1-phase 220/240	3-phase 220/240	3-phase 440/480	3-phase 600	DC* 125	DC* 250	Conductor AWG size/type	Catalog no.
100	J	2	200	10	-	-	-	7.5	20	12-10 Sol/12-1 Str 75°C Cu	RDF100J-2
		3		-	30	60	75	7.5	20		RDF100J-3
		4		-	30	60	75	7.5	20		RDF100J-4

* DC ratings use two poles in series.

PLUS

Handles

Direct mount handle - mounts directly to switch, no shaft required

For switch cat. no.	Color	Test function	Padlockable	Catalog no.
All switches	Black	Y	Y	DIR-07

OR

External front operated pistol handles - shaft required

NEMA type	Color	Test function	Padlockable	Defeatable	Catalog no.
1, 3R, 12	Black	N	Y	Y	H12-03B
	Red/yellow				H12-03R
1, 3R, 4, 4X, 12	Black				H4X-06B
	Red/yellow				H4X-06R
	Black	Y			H4X-06TB
	Red/yellow				H4X-06TR

Or

Metallic hasp (heavy duty) external front operated pistol handles - shaft required

NEMA type	Color	Test function	Padlockable	Defeatable	Catalog no.
1, 3R, 4, 4X, 12	Black	N	Y	Y	H4X-06BHD
1, 3R, 4, 4X, 12	Red/yellow				H4X-06RHD

External right side operated pistol handles - shaft required

NEMA type	Color	Test function	Padlockable	Defeatable	Catalog no.
1, 3R, 4, 4X, 12	Black	N	Y	N/A	H4X-06SB
	Red/yellow				H4X-06SR

+

Shafts for pistol handles

Length — in (mm)	Mounting depth (X) - in (mm)	Catalog no.
7.9 (200)	5.30~9.06 (135~230)	SH5-200
12.6 (320)	5.30~13.78 (135~350)	SH5-320
15.7 (400)	5.30~16.93 (135~430)	SH5-400

OR

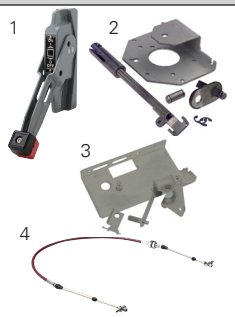

Flange handle (1) - requires shaft operated mechanism or cable operated mechanism + cable

NEMA type	Flange style	Test function	Padlockable	Defeatable	Catalog no.
1, 3R, 4, 12	Standard	N	Y	Y	FLH1
1, 3R, 4, 4X, 12	Chrome plated				FLH2

Shaft operated flange mechanism (2) - includes shaft

For enclosure depth — in (mm)	Catalog no.
6~24 (152~613)	FLRM

Cable operated flange mechanism and cable - must select mechanism (3) and cable (4)

Item / length — in (mm)	Catalog no.
Cable mechanism	FLCM
36 (900) cable	FLC36
60 (1500) cable	FLC60
120 (3000) cable	FLC120

OR

NFPA through the door handle kit - to be used with front pistol handle

Color	Test function	Padlockable	Defeatable	Catalog no.
Red	N	Y	N	H79-2

AND...

Accessories — Aux. contacts

Auxiliary contacts

Contact type	No. of contacts	Continuous amp rating	Voltage (Vac)	Max number of aux contacts per switch	Catalog no.
NO	1	10	600	4	BAC05
NC					BAC06

Dimensions — in (mm)

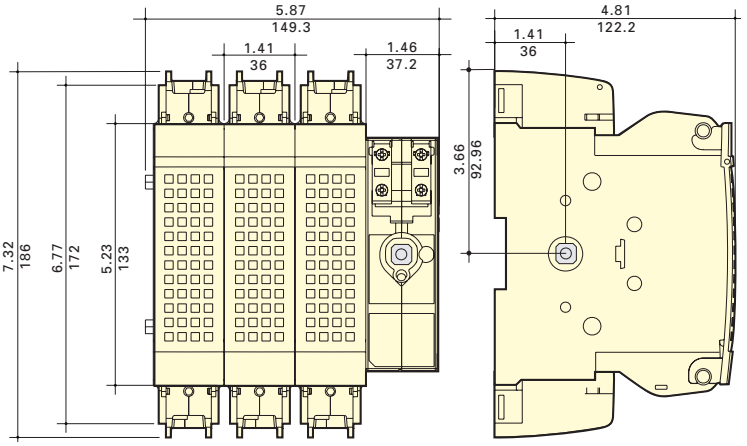

Direct mount handle

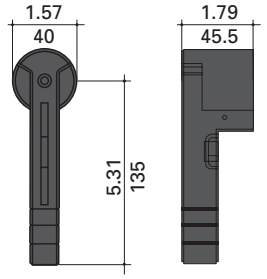

DIR-07

Flange handle

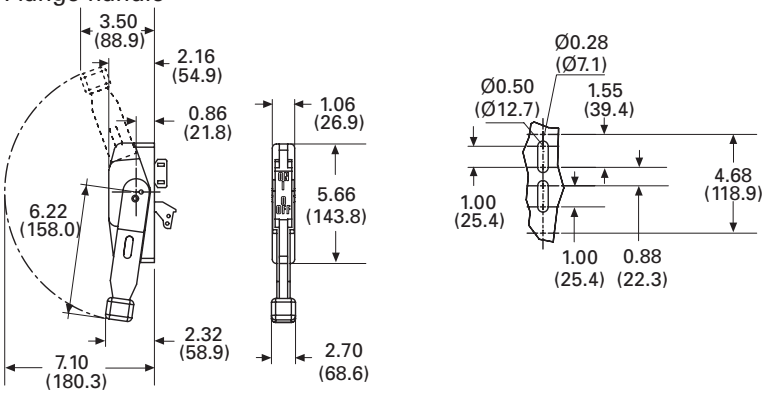

FLH_

External front and right side pistol handle

Handle type

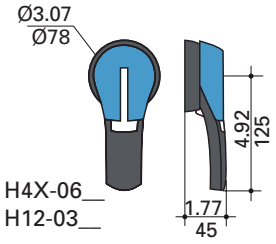

H4X-06__
H12-03__

Direction of front operation

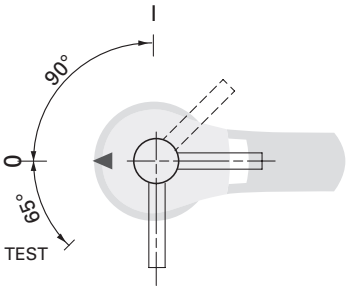

Direction of right side operation

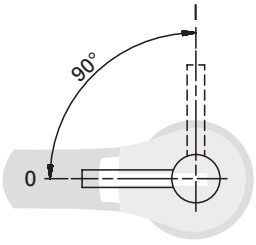

Door drilling layout

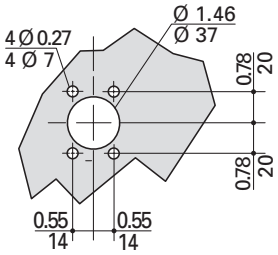

Standard 200 and 400 amp Class J

For a complete assembly, select:

Select for standard applications

Switch + lugs

+

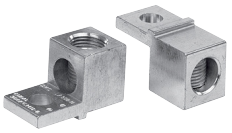

Switch

Amps	Fuse class	Poles	SCCR (kA)	Max horsepower rating: 1-phase 220/240	3-phase 220/240	3-phase 440/480	3-phase 600	DC* 125	DC* 250	Catalog no.
200	J	2	200	10	-	-	-	-	-	RDF200J-2
		3		-	60	125	150	-	-	RDF200J-3
		4		-	60	125	150	-	-	RDF200J-4
400		2		10	-	-	-	20	50	RDF400J-2
		3		-	125	250	350	20	50	RDF400J-3
		4		-	125	250	350	20	50	RDF400J-4

* DC ratings use two poles in series.

Terminal lug kit

Switch amps	Poles	Lugs per kit	AWG wire / type	Catalog no.
200	2	2	6-300 kcmil 75°C Cu/Al	LUG1-2
	3	3		LUG1-3
	4	4		LUG1-4
400	2	2	4-600 kcmil or dual 1/0-250 kcmil 75°C Cu/Al	LUG2-2
	3	3		LUG2-3
	4	4		LUG2-4

PLUS

Handles

Direct mount handle - mounts directly to switch, no shaft required

For switch cat. no.	Color	Test function	Padlockable	Catalog no.
All switches	Black	Y	Y	DIR-07

OR

External front operated pistol handles - shaft required

NEMA type	Color	Test function	Padlockable	Defeatable	Catalog no.
1, 3R, 12	Black	N	Y	Y	H12-03B
	Red/yellow				H12-03R
1, 3R, 4, 4X, 12	Black				H4X-06B
	Red/yellow				H4X-06R
	Black	Y			H4X-06TB
	Red/yellow				H4X-06TR

Or

Metallic hasp (heavy duty) external front operated pistol handles - shaft required

NEMA type	Color	Test function	Padlockable	Defeatable	Catalog no.
1, 3R, 4, 4X, 12	Black	N	Y	Y	H4X-06BHD
	Red/yellow				H4X-06RHD

External right side operated pistol handles - shaft required

NEMA type	Color	Test function	Padlockable	Defeatable	Catalog no.
1, 3R, 4, 4X, 12	Black	N	Y	N/A	H4X-06SB
	Red/yellow				H4X-06SR

+

Shafts for pistol handles

Length — in (mm)	Mounting depth (X) — in (mm)	Catalog no.
7.9 (200)	200 A: 5.70-9.06 (145-230) 400 A: 7.87-10.24 (200-260)	SH5-200
12.6 (320)	200 A: 5.70-13.78 (145-350) 400 A: 7.87-16.93 (200-380)	SH5-320
15.7 (400)	200 A: 5.70-16.93 (145-430) 400 A: 7.87-18.10 (200-460)	SH5-400

OR

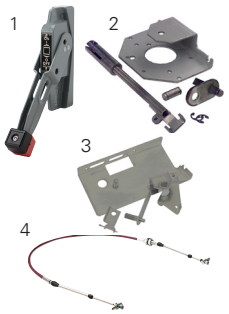

Flange handle (1) 200 A only - requires shaft operated mechanism or cable operated mechanism + cable

NEMA type	Flange style	Test function	Padlockable	Defeatable	Catalog no.
1, 3R, 4, 12	Standard	N	Y	Y	FLH1
1, 3R, 4, 4X, 12	Chrome plated				FLH2

Shaft operated flange mechanism (2) 200 A only - includes shaft

For enclosure depth — in (mm)	Catalog no.
6~24 (152~613)	FLRM

Cable operated flange mechanism and cable 200 A only - must select Mechanism (3) and Cable (4)

Item — in (mm)	Catalog no.
Cable mechanism	FLCM
36 (900) cable	FLC36
60 (1500) cable	FLC60
120 (3000) cable	FLC120

OR

NFPA through the door handle kit - to be used with front pistol handle

Use with switch	Color	Test function	Padlockable	Defeatable	Catalog no.
RDF200J-_	Red	N	Y	N	H79-2
RDF400J-_					H79-3

AND...

Accessories — Aux. contacts

Auxiliary contacts

Contact type	No. of contacts	Continuous amp rating	Voltage (Vac)	Max number of aux contacts per switch catalog number	Catalog no.
NO	1	10	600	RDF200J-__: 4	BAC05
NC				RDF400J-__: 8	BAC06

AND...

Accessories — Shrouds

Terminal shrouds - includes terminal shroud for lineside or loadside

Switch amps	Poles	Catalog no.
200	2	TSH8-2TB
	3	TSH8-3TB
	4	TSH8-4TB
400	2	TSH9-2TB
	3	TSH9-3TB
	4	TSH9-4TB

Dimensions — in (mm)

RDF200J-3

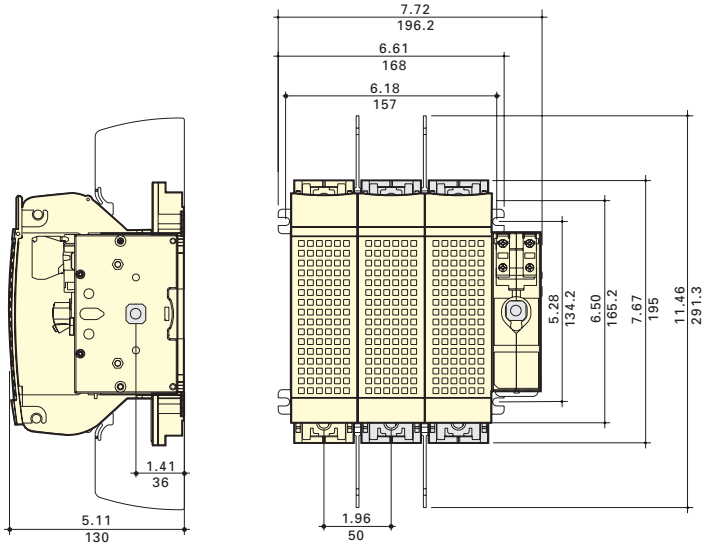

RDF400J-3

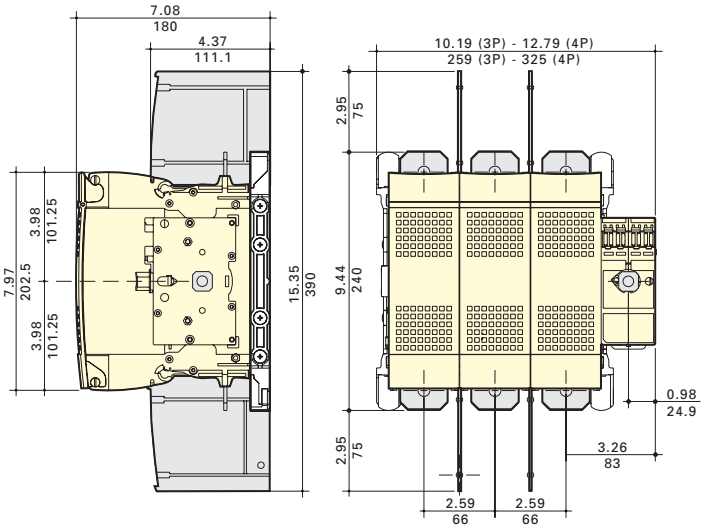

Dimensions — in (mm)

DIR-07 direct mount handle

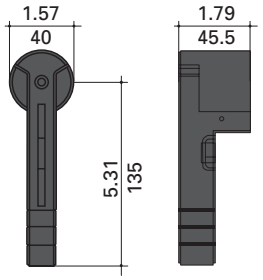

FLH_ flange handle

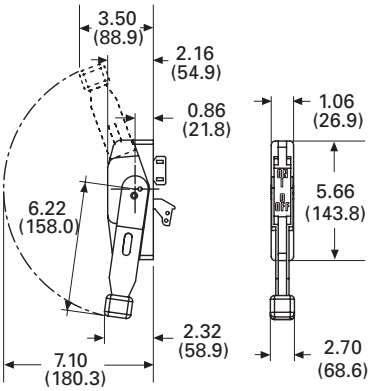

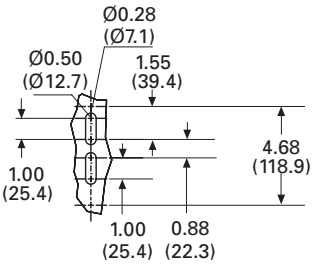

External front and right side pistol handle

Handle type

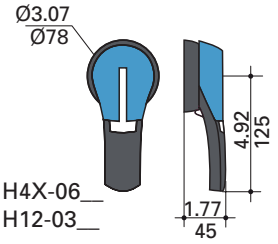

Direction of front operation

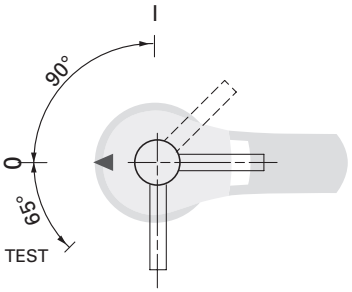

Direction of right side operation

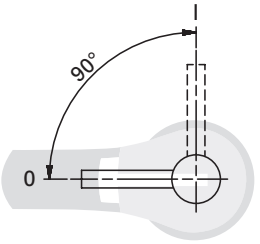

Door drilling layout

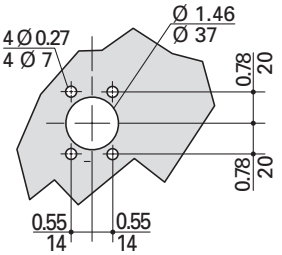

Terminal lugs

200 A (LUG1-__)

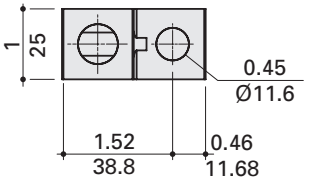

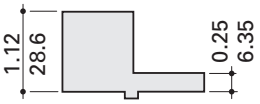

400 A (LUG2-__)

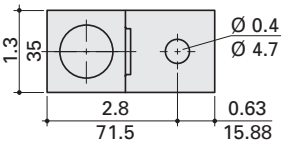

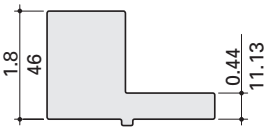

Standard 600 amp Class J and 800 amp Class L

For a complete assembly, select:

Select for standard application

Switch + lugs

+

Switch

Amps	Fuse class	Poles	SCCR (kA)	Max horsepower rating, 3-phase 220/240	440/480	600	Catalog no.
600	J	2	200	-	-	-	RDF600J-2
		3		200	400	500	RDF600J-3
		4		200	400	500	RDF600J-4
800	L	2		-	-	-	RDF800L-2
		3		200	500	500	RDF800L-3
		4		200	500	500	RDF800L-4

Terminal lug kit

Switch amps	Poles	Lugs per kit	Conductor AWG size / type	Catalog no.
600-800	2	2	(2) 2-600 kcmil 75°C Cu/ Al	LUG5-2
	3	3		LUG5-3
	4	4		LUG5-4

PLUS

Handles

Direct mount handle - mounts directly to switch, no shaft required

For switch cat. no.	Color	Test function	Padlockable	Defeatable	Catalog no.
All switches	Black	Y	Y	N	DIR-08

OR

Or

External front operated pistol handles - shaft required

NEMA type	Color	Test function	Padlockable	Defeatable	Catalog no.
1, 3R, 4, 4X, 12	Black	N	Y	Y	H4X-07B
	Red/yellow				H4X-07R

Metallic hasp (heavy duty) external front operated pistol handles - shaft required

NEMA type	Color	Test function	Padlockable	Defeatable	Catalog no.
1, 3R, 4, 4X, 12	Black	N	Y	Y	H4X-07BHD
	Red/yellow				H4X-07RHD

+

Shafts for pistol handles

Length — in (mm)	Mounting depth (X) — in (mm)	Catalog no.
7.9 (200)	10.63~11.97 (270~304)	SH7-200
12.6 (320)	10.63~16.69 (270~424)	SH7-320
15.7 (400)	10.63~19.84 (270~504)	SH7-400

OR

NFPA through the door handle kit - to be used with front pistol handle

For switch cat. no.	Color	Test function	Padlockable	Defeatable	Catalog no.
All switches	Red	N	Y	N	H79-4

AND...

Accessories

Aux. contacts

Auxiliary contacts

Contact type	No. of contacts	Continuous amp rating	Voltage (Vac)	Max number of aux contacts per switch	Catalog no.
NO	1	10	600	8	BAC05
NC					BAC06

AND...

Shrouds

Terminal shrouds - includes terminal shroud for lineside or loadside

Switch amps	Poles	Catalog no.
600-800	2	TSH10-2TB
	3	TSH10-3TB
	4	TSH10-4TB

Dimensions — in (mm)

RDF600J-3 and RDF800L-3

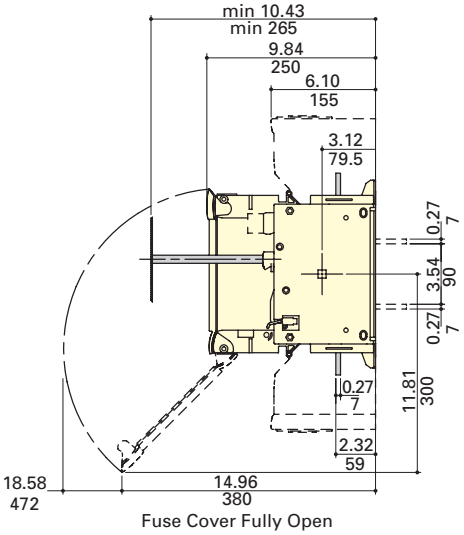

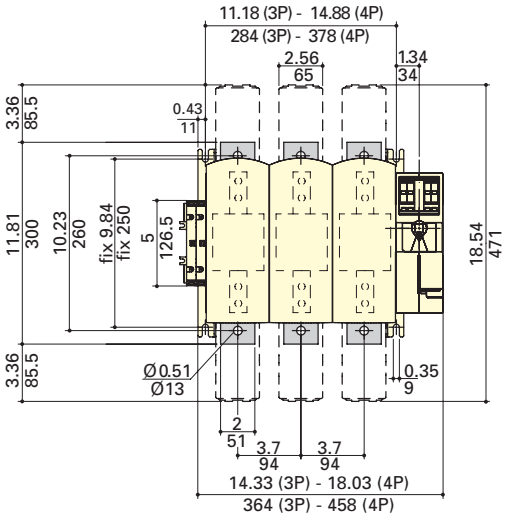

Dir-08 drect mount handle

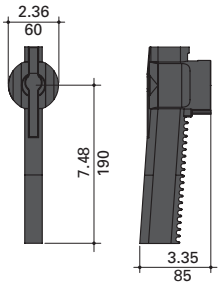

External front pistol handle

Handle type

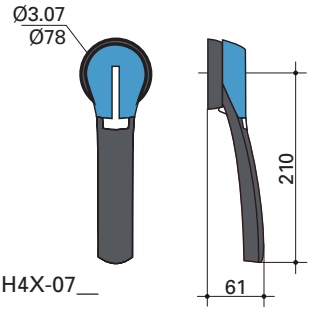

H4X-07__

Direction of front operation

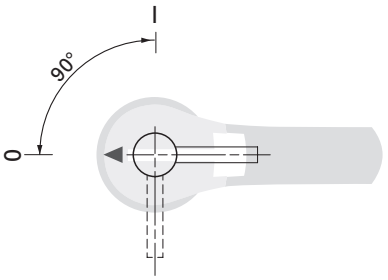

Door drilling layout

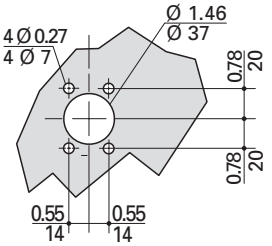

Terminal lugs

600 to 800 A (LUG5-__)

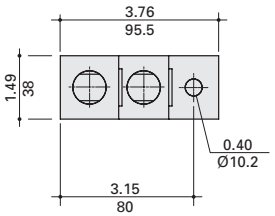

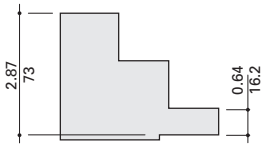

UL 98 non-fused rotary disconnect switches — 30 to 1200 amps

Bussmann series UL 98 non-fused rotary disconnect switches are versatile switches that "break" and "make" power circuits ON and OFF load.

Agency information

- UL 98, Guide WHTY, File E155130
- CSA 22.2 No. 4, File 257020
- Conforms with IEC 60947-3

Features

- Make and break power under load
- Up to 200 kA SCCR
- Panel mount (30-100 A compact DIN-Rail or panel mount)
- Disconnect switches are front, right side and direct handle operable (30-100 A)
- Finger-safe (30-100 A compact only)
- Fully visualized breaking (100-1200 A)

Online resources

Visit Eaton.com/bussmannseries for:

- CAD drawings
- Instruction sheets
- UL information

Related Bussmann series products

Fuse blocks
Modular Class H(K), J and RK fuse blocks up to 600 A
Modular Class H(K), J and RK power distribution fuse blocks up to 400 A
Modular, finger-safe CH Class CC and J, and UL supplemental and IEC 10x38mm DIN-Rail holders up to 60 A
Finger-safe Optima Class CC, UL supplemental and IEC 10x38mm DIN-Rail/panel mount holders up to 30 A
Finger-safe Optima™ Class CC, UL supplemental and IEC 10x38mm DIN-Rail/panel mount protection modules up to 30 A

RD30-3

RD200-3

RD600-3

IEC specifications

		Catalog no.									
3-pole		**RD30-3**	**RD60-3**	**RD100-3**	**RD100-3-SCCR**	**RD200-3**	**RD400-3**	**RD600-3**	**RD800-3**	**RD1000-3**	**RD1200-3**
4-pole		**—**	**—**	**—**	**—**	**RD200-4**	**RD400-4**	**RD600-4**	**RD800-4**	**RD1000-4**	**RD1200-4**
Thermal current I_{th} @ 40°C (A)		30	60	100	100	200	400	—	—	—	—
Rated insulation voltage U_i (V)		800	800	800	1000	1000	1000	1000	1000	1000	1000
Rated impulse withstand voltage U_{imp} (kV)		8	8	8	8	8	8	12	12	12	12
Rated operation currents I_e (A)											
Rated voltage (Vac)	Load duty category	A [1]	A [1]	A [1]	A [1]	A [1]	A [1]	A [1]	A [1]	A [1]	A [1]
400	AC-22 A	32	63	100	100	200	400	630	800	1000	1200
	AC-23 A										1000
690	AC-22 A			80				500	630	630	630
	AC-23 A			63			315	200	400	400	400
Operational power (Vac) in AC-23 (kW)											
400 V w/o prebreak AC [1, 2]		15	30	45	51	100	220	355	450	560	560
500 V w/o prebreak AC [1, 2]					63	140	280	450	560		
690 V w/o prebreak AC [1, 2]		18.5			90	185	185	185	400	400	400
Overload capacity (U_e 415 Vac)											
Rated short-circuit making capacity I_{cm} (kA peak) [3]		12	12	12	17.6	32	48	48	75	48	75
Fuse protected short-circuit withstand											
(kA RMS prospective)											
Short-circuit current (kA) [3]		50	50	25	200	200	200	100	100	100	100
Associated fuse rating (A) [3]		32	63	100	100		400	630	800	1000	1250
Connection											
Minimum Cu cable cross section (mm²)		2.5	2.5	10	35	70	185	2x150	2x185	2x240	—
Minimum Cu busbar section (mm²)		—	—	—	—	—	—	2x30x5	2x40x5	2x50x5	2x60x5
Maximum Cu cable section (mm²)		70	70	70	300	300	600	—	—	—	—

1 A/B: Category with index A = frequent operation; category with index B = infrequent operation.
2 The power value is given for information only; the current values vary from one manufacturer to another.
3 For a rated operating voltage, Ue = 400 Vac.

UL specifications

RD30-3 | RD200-3 | RD600-3

		Catalog no.									
3-pole		**RD30-3**	**RD60-3**	**RD100-3**	**RD100-3-SCCR**	**RD200-3**	**RD400-3**	**RD600-3**	**RD800-3**	**RD1000-3**	**RD1200-3**
4-pole		**—**	**—**	**—**	**—**	**RD200-4**	**RD400-4**	**RD600-4**	**RD800-4**	**RD1000-4**	**RD1200-4**
UL standard		UL 98	UL 98	UL 98	UL 98	UL 98	UL 98	UL 98	UL 98	UL 98	UL 98
Max ampacity		30 A	60 A	100 A	100 A	200 A	400 A	600 A	800 A	1000 A	1200 A
Switch type		Compact	Compact	Compact	Standard	Standard	Standard	Standard	Standard	Standard	Standard
Handle operation		Front/Side	Front/Side	Front/Side	Front	Front	Front	Front	Front	Front	Front
UL electrical ratings											
Max voltage (AC)		600 Vac	600 Vac	600 Vac	600 Vac	600 Vac	600 Vac	600 Vac	600 Vac	600 Vac	600 Vac
Max voltage (DC)		—	—	—	250 Vdc	250 Vdc	—	250 Vdc	—	—	—
Max. AC Hp ratings	1-phase, 120	2	3	5	—	—	—	—	—	—	—
	1-phase, 240	5	10	10	10	10	—	—	—	—	—
	3-phase, 240	10	20	20	30	75	125	200	200	200	200
	3-phase, 480	20	40	50	75	150	250	400	500	500	500
	3-phase, 600	25	50	50	100	200	350	350	500	500	500
DC Hp ratings	125	—	—	—	—	—	—	20	—	—	—
	250	—	—	—	—	—	—	50	—	—	—
Electrical characteristics											
SCCR with fuse (kA)		100	100	25 /100*	200	200	200	200	100	100	100
Fuse class		J	J	J	J	J	J	J	L	L	L
Max. fuse rating (A)		30	60	100	10A	200	400	600	800	1000	1200
Terminal lugs/kits		Integral	Integral	Integral	•	•	•	•	•	•	•
Lug mounting torque - lb-in (N•m)		—	—	—	160 (18)	160 (18)	LUG2-_ 310 (35) LUG3-_ 398 (45)	310 (35)	310 (35)	310 (35)	310 (35)
Wire type		75°C Cu	75°C Cu	75°C Cu	75°C Cu/ Al	75°C Cu/ Al	75°C Cu/ Al	75°C Cu/ Al	75°C Cu/ Al	75°C Cu/ Al	75°C Cu/ Al
Wire range and torque - lb-in (N•m)	Solid	12-10, 35.4 (4)	12-10, 35.4 (4)	12-10, 35.4 (4)	—	—	—	—	—	—	—
	Stranded	10-1, 35.4 (4)	10-1, 35.4 (4)	10-1, 35.4 (4)	6-300 kcmil, 275 (31)	6-300 kcmil, 275 (31)	LUG2-_ 4-600 kcmil, 550 (62)	(2) 2-600 kcmil, 375 (42.4)	(4) 2-600 kcmil, 375 (42.4)	(4) 2-600 kcmil, 375 (42.4)	(4) 2-600 kcmil, 375 (42.4)
		1/0, 39.8 (4.5)	1/0, 39.8 (4.5)	1/0, 39.8 (4.5)			Dual 1/0-250 kcmil, 550 (62)				
		2/0, 44.3 (5)	2/0, 44.3 (5)	2/0, 44.3 (5)			LUG3-_: (2) 6-2, 200 (22.6)				
							(2) 1-350 kcmil, 375 (42.4)				
Mechanical characteristics											
Endurances/Cycles		10,000	10,000	10,000	10,000	8000	6000	6000	3500	3500	3500
Physical characteristics											
Dimensions		See drawings on product pages									
Weight - lbs (kg)	3-pole	1.3 (0.6)	1.3 (0.6)	1.3 (0.6)	4.2 (1.91)	4.2 (1.91)	10.0 (4.6)	18.1 (8.2)	19.6 (8.9)	19.6 (8.9)	19.6 (8.9)
	4-pole	—	—	—	—	5.0 (2.3)	12.3 (5.6)	23.9 (10.9)	25.3 (11.5)	25.3 (11.5)	25.3 (11.5)
Environmental											
Operating Temperature		-20 to 70°C	-20 to 70°C	-20 to 70°C	-20 to 70°C	-20 to 70°C	-20 to 70°C	-20 to 70°C	-20 to 70°C	-20 to 70°C	-20 to 70°C
Flammability Rating		UL 94-V0	UL 94-V0	UL 94-V0	UL 94-V0	UL 94-V0	UL 94-V0	UL 94-V0	UL 94-V0	UL 94-V0	UL 94-V0
Accessories											
Lug kit cat. no.	3-pole	Integral	Integral	Integral	•	•	•	•	•	•	•
	4-pole	—	—	—	—	•	•	•	•	•	•
Handles	NEMA 1, 3R, 12	•	•	•	•	•	•	—	—	—	—
	NEMA 1, 3R, 4, 4X, 12	•	•	•	•	•	•	•	•	•	•
	Direct	•	•	•	•	•	•	•	•	•	•
	Front Pistol	•	•	•	•	•	•	•	•	•	•
	Front or Side Selector	•	•	•	—	—	—	—	—	—	—
Shaft c/s - mm		5x5	5x5	5x5	10x10	10x10	10x10	12x12	12x12	12x12	12x12
Shaft guide		•	•	•	•	•	•	•	•	••	•
Shrouds		•	•	•	•	•	•	•	•	•	•
Additional pole accessory		•	•	•	—	—	—	—	—	—	—
Auxiliary contacts	NO + NC	•	•	•	•	•	•	•	•	•	•
	(2) NO	•	•	•	—	—	—	—	—	—	—

• Available, see product page for details and catalog numbers.
— Not available.
* 25 kA @ 600 Vac, 100 kA @ 480 Vac.

UL 98 non-fused rotary disconnect switches — 30, 60 and compact 100 A

For a complete assembly, select:

Select for standard application

Switch

Amps	Poles	SCCR (kA)	Max horsepower rating 1-phase 120	1-phase 220/240	3-phase 220/240	3-phase 440/480	3-phase 600	Conductor AWG size/type	Catalog no.
30	3	100	2	5	10	20	25	10-2/0 Str/12-10 Sol 75°C Cu	RD30-3
60			3	10	20	40	50		RD60-3
100		25/100*	5	10	20	50	50		RD100-3

* 100 kA @480 Vac, 25 kA @ 600 Vac.

PLUS

Handles

Direct mount handle - mounts directly to switch, no shaft required

For switch cat. no.	Color	Test function	Padlockable	Catalog no.
All switches	Black	N	Y - On Switch	DIR-02

OR

1 2

External front or right side operated selector handles - shaft required

NEMA type	Color	Handle length	Test function	Padlockable	Catalog no.
1, 3R, 4, 4X, 12	Black	Short	N	Y	H4X-01B (1)
	Red/yellow	Short			H4X-01R (1)
	Black	Long			H4X-02B (2)
	Red/yellow	Long			H4X-02R (2)

Or

External front operated pistol handles - shaft required

NEMA type	Color	Handle length	Test function	Padlockable	Defeatable	Catalog no.
1, 3R, 4, 4X, 12	Black	—	N	Y	Y	H4X-03B
	Red/yellow	—				H4X-03R

Metallic hasp (heavy duty) external front operated pistol handles - shaft required

NEMA type	Color	Handle length	Test function	Padlockable	Defeatable	Catalog no.
1, 3R, 4, 4X, 12	Black	—	N	Y	Y	H4X-03BHD
	Red/yellow	—				H4X-03RHD

\+

1

Shafts for selector handles

Length — in (mm)	Mounting depth (X) — in (mm)	Catalog no.
5.9 (150)	3.50~7.60 (89~193)	SH4-150 (1)
7.9 (200)	3.50~9.50 (89~241)	SH4-200 (1)
12.6 (320)	3.50~14.9 (89~378)	SH4-320 (1)

2

Shafts for pistol handles

Length — in (mm)	Mounting depth (X) - in (mm)	Catalog no.
7.9 (200)	3.30~7.40 (84~188)	SH3-200 (2)
12.6 (320)	3.30~9.30 (84~236)	SH3-320 (2)
15.7 (400)	3.30~14.7 (84~373)	SH3-400 (2)

\+

Shaft guide for selector handles

	Catalog no.
Required for 12.6" (320mm) long shafts, optional for other lengths	SH-GUIDE1

Shaft guide for pistol handles

	Catalog no.
Required for 15.7î (400mm) long shafts, optional for other lengths	SH-GUIDE2

AND...

Accessories

Aux. contacts

Auxiliary contacts

Contact type	No. of contacts	Continuous amp rating	Voltage (Vac)	Max number of units per switch	Catalog no.
NO + NC	1 of each	10	240	2 (1 per side/4 contacts total)	BAC01
NO	2			2 (1 per side/4 contacts total)	BAC02

AND...

Shrouds

Terminal shrouds - includes terminal shroud for both lineside and loadside

Switch amps	Poles	Location on switch	Catalog no.
All switch-es	1 (for switched 4th pole)	Lineside and loadside	TSH3-1TB
	3		TSH3-3TB

AND...

Sw. 4th pole

Switched 4th Pole - converts 3-pole switch to 4-pole

Switch amps	Catalog no.
30	POLE98-30
60	POLE98-60
100	POLE98-100

Auxiliary contact configurations

Possible 4th pole configurations

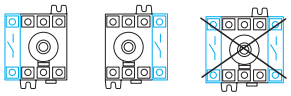

Dimensions - in (mm)

Direct handle operation

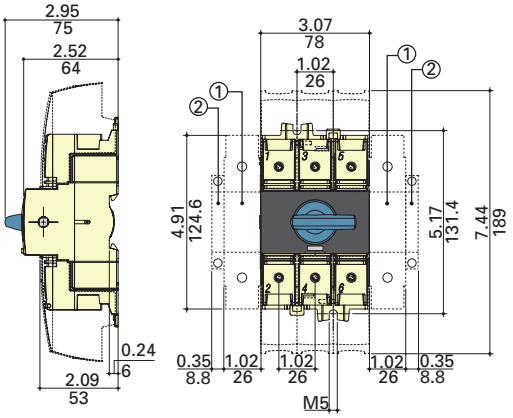

External front operation

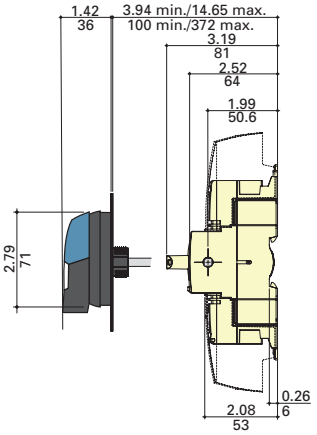

External right side operation

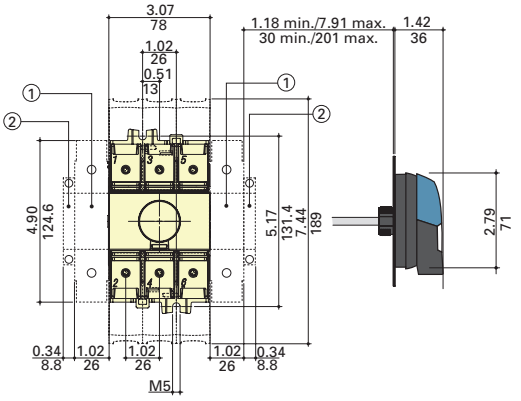

1. Position for 1 switched 4th pole (1 per device max.) or 1 auxiliary contact.
2. Position for 1 auxiliary contact only.

Note: Maximum of 4 Auxiliary contacts, or 3 Auxiliary contacts + one switched 4th pole.

External front/right side operated selector handle, front operated pistol handle

Handle type

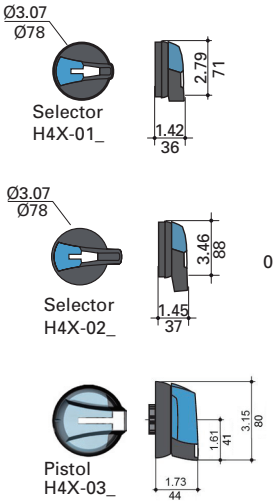

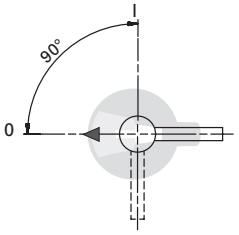

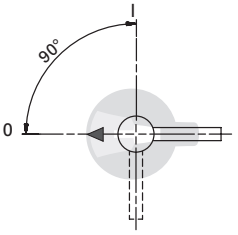

Door drilling layouts

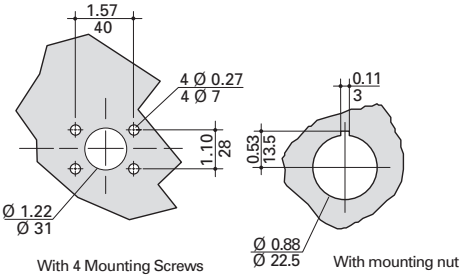

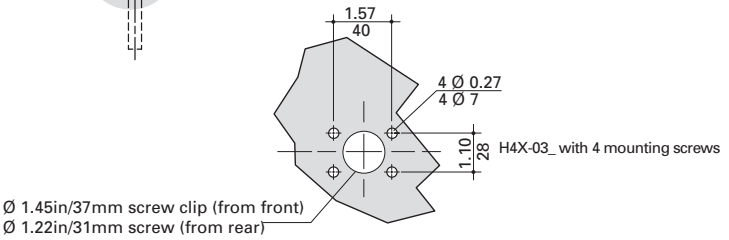

UL 98 non-fused rotary disconnect switches—100, 200 and compact 400 A

For a complete assembly, select:

Select for standard application

Switch

+

Amps	Poles	SCCR (kA)	Max horsepower rating 1-phase 220/240	3-phase 220/240	3-phase 440/480	3-phase 600	Catalog no.
100	3	200	10	30	75	100	RD100-3-SCCR
200	3		10	75	150	200	RD200-3
	4		10	75	150	200	RD200-4
400	3		-	125	250	350	RD400-3
	4		-	125	250	350	RD400-4

Terminal lug kit

Switch amps	Poles	Lugs per kit	Conductor AWG size/type	Catalog no.
100-200	2	2	6-300 kcmil 75°C Cu/ Al	LUG1-2
	3	3		LUG1-3
	4	4		LUG1-4
400	2	2	4-600 kcmil or Dual 1/0-250 kcmil 75°C Cu/ Al	LUG2-2
	3	3		LUG2-3
	4	4		LUG2-4
	2	2	(2) 6-350 kcmil 75°C Cu/ Al	LUG3-2
	3	3		LUG3-3
	4	4		LUG3-4

PLUS

Handle

Direct mount handle - mounts directly to switch, no shaft required

For switch cat. no.	Color	Test function	Padlockable	Catalog no.
All switches	Black	N	Y	DIR-03

OR

Or

External front operated pistol handles - shaft required

NEMA type	Color	Test function	Padlockable	Defeatable	Catalog no.
1, 3R, 12	Black	N	Y	Y	H12-03B
	Red/yellow				H12-03R
1, 3R, 4, 4X, 12	Black				H4X-06B
	Red/yellow				H4X-06R

Metallic hasp (heavy duty) external front operated pistol handles - shaft required

NEMA type	Color	Test function	Padlockable	Defeatable	Catalog no.
1, 3R, 4, 4X, 12	Black	N	Y	Y	H4X-06BHD
	Red/yellow				H4X-06RHD

+

Shafts for pistol handles

Length — in (mm)	Mounting depth (X) - in (mm)	Catalog no.
7.9 (200)	5.31~10.43 (135~265)	SH5-200
12.6 (320)	5.31~15.16 (135~385)	SH5-320
15.7 (400)	5.31~18.31 (135~465)	SH5-400

+

Shaft Guide

	Catalog no.
Required for 15.7î (400mm) long shafts, optional for other lengths	SH-GUIDE2

AND...

Accessories

Aux. contacts

Auxiliary contacts

Contact type	No. of contacts	Continuous amp rating	Voltage Vac	Max number of aux contacts per switch	Catalog no.
NO + NC	1 of each	10.1	125-250	2	BAC03*
NO + NC					BAC04*
NO + NC		1	125		BAC11*
NO + NC					BAC12*

* For one auxiliary contact, install either BAC03 or BAC11. For two auxiliary contacts, install BAC03 + BAC04, or BAC11 + BAC12.

AND...

Shrouds

Terminal shrouds - includes terminal shroud for Lineside or loadside

Switch amps	Poles	Location on switch	Catalog no.
100-200	3	Lineside	TSH4-3T
		Loadside	TSH4-3B
	4	Lineside or loadside	TSH4-4TB
400	3	Lineside	TSH5-3T
		Loadside	TSH5-3B
	4	Lineside or loadside	TSH5-4TB

Dimensions — in (mm)

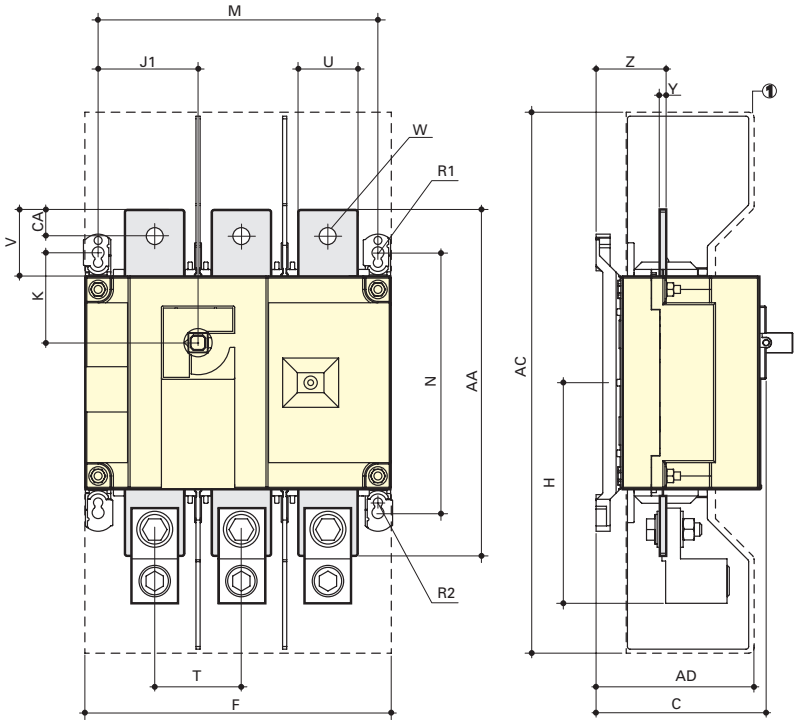

Switch amps	Overall dim. C	Terminal shrouds AC	Terminal shrouds AD	Switch body F 3p.	Switch body F 4p.	Switch body H	Switch body J1 3p.	Switch body J1 4p.	Switch body K	Switch body M 3p.	Switch body M 4p.	Switch mounting N	Switch mounting R1	Switch mounting R2	Switch mounting T	Switch mounting U	Connection V	Connection W	Connection Y	Connection Z	Connection A A	Connection AC
100	3.72 (95)	10.1 (256)	3.05 (78)	7.09 (180)	9.06 (230)	4.22 (107)	2.17 (55)	4.13 (105)	1.8 (46)	6.3 (160)	8.27 (210)	5.31 (135)	0.35 (9)	0.27 (7)	1.97 (50)	0.98 (25)	1.18 (30)	0.43 (11)	0.14 (4)	1.35 (34)	6.3 (160)	0.6 (15)
200	3.72 (95)	10.1 (256)	3.05 (78)	7.09 (180)	9.06 (230)	4.22 (107)	2.17 (55)	4.13 (105)	1.8 (46)	6.3 (160)	8.27 (210)	5.31 (135)	0.35 (9)	0.27 (7)	1.97 (50)	0.98 (25)	1.18 (30)	0.43 (11)	0.14 (4)	1.35 (34)	6.3 (160)	0.6 (15)
400	4.92 (128)	16 (406)	4.15 (115)	9.05 (230)	11.4 (290)	6.53 (166)	2.95 (75)	5.31 (135)	2.65 (68)	8.26 (210)	10.6 (270)	7.67 (195)	0.35 (9)	0.27 (7)	2.56 (65)	1.77 (45)	1.97 (50)	0.43 (13)	0.2 (5)	2.08 (53)	10.2 (260)	0.8 (20)

DIR-03 direct mount handle

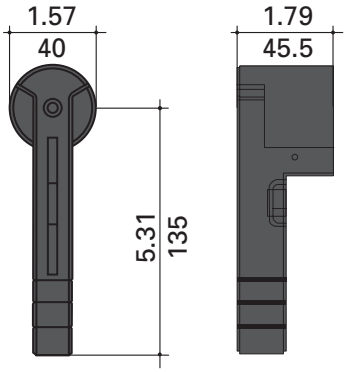

External front handle

Handle type

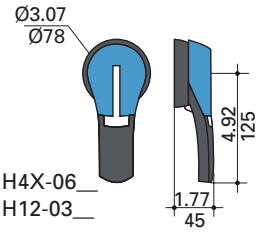

Direction of front operation

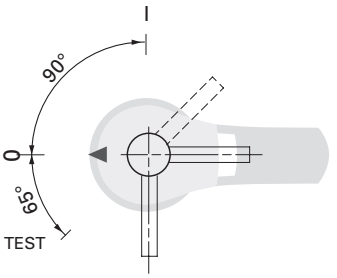

Door drilling layout

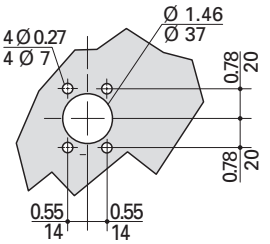

Terminal lugs

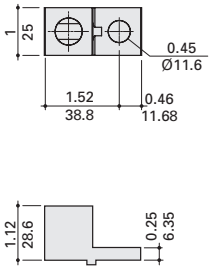

LUG1-_ 100 to 200 A

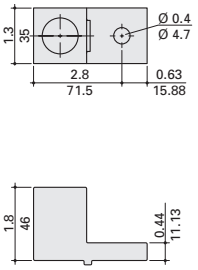

LUG2-_ 400 A

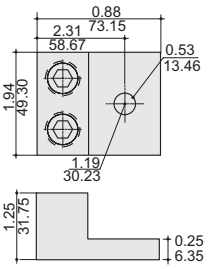

LUG3-_ 400 A

UL 98 non-fused rotary disconnect switches — 600, 800, 1000 and 1200 A

For a complete assembly, select:

Select for standard application

Switch

Amps	Poles	SCCR (kA)	Max horsepower rating 3-phase 220/240	3-phase 440/480	3-phase 600	DC* 125	DC* 250	Catalog no.
600	3	200	240	400	350	20	50	RD600-3
	4		240	400	350	20	50	RD600-4
800	3	100	200	500	500	-	-	RD800-3
	4		200	500	500	-	-	RD800-4
1000	3		200	500	500	-	-	RD1000-3
	4		200	500	500	-	-	RD1000-4
1200	3		200	500	500	-	-	RD1200-3
	4		200	500	500	-	-	RD1200-4

* DC ratings use two poles in series.

+

Terminal lug kit

Switch amps	Poles	Lugs per kit	Lugs required per pole	Conductor AWG size/type	Catalog no.
600	3	3	1	(2) 2-600 kcmil 75°C Cu/ Al	LUG5-3
	4	4			LUG5-4
800-1200	3	6	2	(4) 2-600 kcmil 75°C Cu/ Al	LUG6-6
	4	8			LUG6-8

PLUS

Direct mount handle - mounts directly to switch, no shaft required

For switch cat. no.	Color	Test function	Padlockable	Catalog no.
All switches	Black	N	Y	DIR-04

OR

Handles

Or

External front operated pistol handles - shaft required

NEMA type	Color	Test function	Padlockable	Defeatable	Catalog no.
1, 3R, 4, 4X, 12	Black	N	Y	Y	H4X-07B (1)
	Red/yellow				H4X-07R (1)
	Black				H4X-08B (2)
	Red/yellow				H4X-08R (2)

Metallic hasp (heavy duty) external front operated pistol handles - shaft required

NEMA type	Color	Test function	Padlockable	Defeatable	Catalog no.
1, 3R, 4, 4X, 1	Black	N	Y	Y	H4X-07BHD (3)
	Red/yellow				H4X-07RHD (3)
	Black				H4X-08BHD (4)
	Red/yellow				H4X-08RHD (4)

+

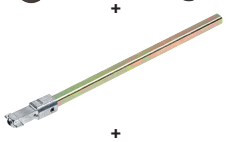

Shafts for pistol handles

Length — in (mm)	Mounting depth (X) — in (mm)	Catalog no.
7.9 (200)	8.70~13.50 (221~343)	SH6-200
12.6 (320)	8.70~18.23 (221~463)	SH6-320
15.7 (400)	8.70~21.38 (221~543)	SH6-400

+

Shaft guide

	Catalog no.
Required for 15.7" (400mm) long shafts, optional for other lengths	SH-GUIDE2

AND...

Accessories

Aux. contacts

Auxiliary contacts

Contact type	No. of contacts	Continuous amp rating	Voltage (Vac)	Max number of aux contacts per switch	Catalog no.
NO + NC	1 of each	10.1	125-250	2	BAC03*
NO + NC	1 of each				BAC04*
NO + NC	1 of each	1	125		BAC11*
NO + NC	1 of each				BAC12*

* For one auxiliary contact, install either BAC03 or BAC11. For two auxiliary contacts, install BAC03 + BAC04, or BAC11 + BAC12.

AND...

Shrouds

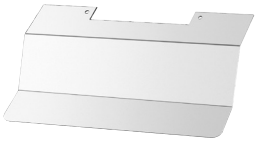

Terminal shrouds* — includes terminal shroud for lineside or loadside

Switch amps	Poles	Location on switch	Catalog no.
600	3	Lineside or loadside	TSH6-3TB
	4		TSH6-4TB
800-1200	3		TSH7-3TB
	4		TSH7-4TB

* Shroud for lineside included with switch.

Dimensions — in (mm)

600 A

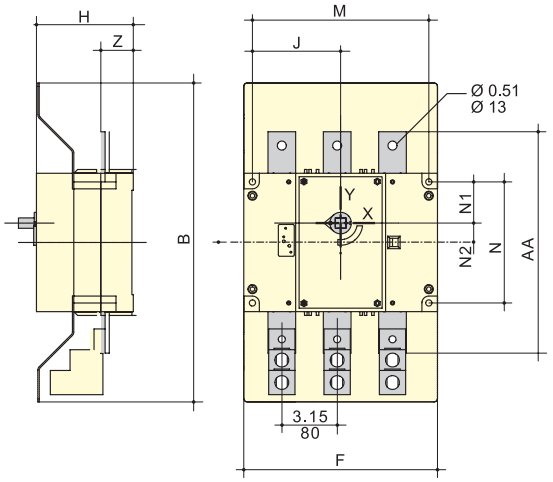

800 to 1200 A

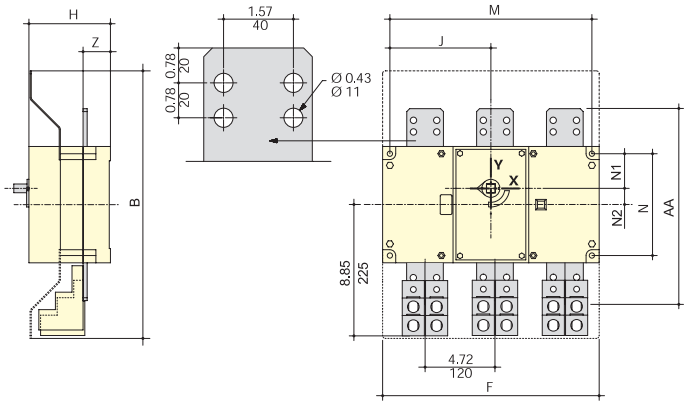

Switch amps	Terminal shrouds B	Switch body						Switch mounting				Connection	
		F 3p.	F 4p.	H	J 3p.	J 4p.	M 3p.	M 4p.	N	N1	N2	A A	Z
600	18.12 (460)	11 (280)	14.17 (360)	5.5 (140)	5 (128)	6.59 (168)	10.03 (255)	13.19 (335)	6.88 (175)	2.34 (60)	1.1 (28)	12.6 (320)	1.85 (47)
800	18.12 (460)	14.64 (372)	19.37 (492)	5.5 (140)	6.83 (174)	9.19 (234)	13.66 (347)	18.38 (467)	6.88 (175)	2.34 (60)	1.1 (28)	13 (330)	1.85 (47)
1000	18.12 (460)	14.64 (372)	19.37 (492)	5.5 (140)	6.83 (174)	9.19 (234)	13.66 (347)	18.38 (467)	6.88 (175)	2.34 (60)	1.1 (28)	13 (330)	1.85 (47)
1200	18.12 (460)	14.64 (372)	19.37 (492)	5.5 (140)	6.83 (174)	9.19 (234)	13.66 (347)	18.38 (467)	6.88 (175)	2.34 (60)	1.1 (28)	13 (330)	1.85 (47)

DIR-04 Direct mount handle

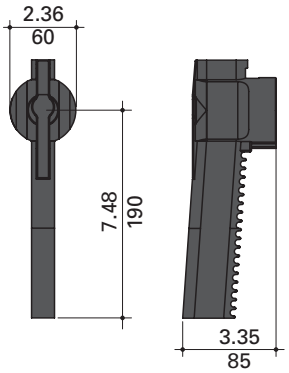

Terminal lugs

External front pistol handles

Handle Type

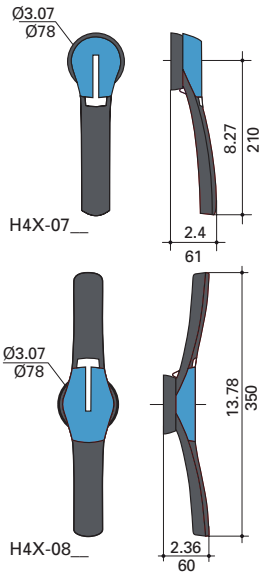

Direction of Front Operation

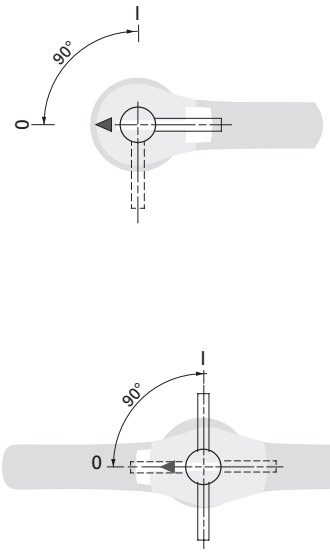

Door drilling layout

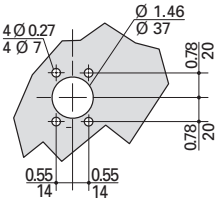

LUG5-__, LUG6-__ 600 to 1200 A

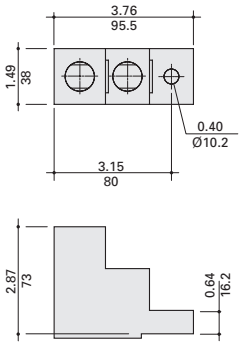

UL 508 non-fused rotary disconnect switches — 16 to 80 A

Eaton UL 508 load break disconnect switches allow safe control and safe disconnection of any motor application or to isolate a circuit within the panel.

These disconnect switches are compact and offer a wide variety of accessories like 4th poles, Auxiliary contacts, door mounting and 6/8-Pole kits.

Features

- Suitable for motor disconnect
- DIN-Rail or panel mount
- Door mount option
- Disconnect switches are front, right side or direct handle operable
- Finger-safe

Agency information

- UL 508, Guide NLRV, File E155129
- CSA C22.2 No. 14, File 257020
- Conforms with IEC 60947-3

Online resources

Visit Eaton.com/bussmannseries for:

- CAD drawings
- Instruction sheets
- UL information

Related Bussmann series products

Fuse blocks
Modular Class H(K), J and RK fuse blocks up to 600 A
Modular Class H(K), J and RK power distribution fuse blocks up to 400 A
Modular, finger-safe CH Class CC and J, and UL supplemental and IEC 10x38mm DIN-Rail holders up to 60 A
Finger-safe Optima Class CC, UL supplemental and IEC 10x38mm DIN-Rail/panel mount holders up to 30 A
Finger-safe Optima™ Class CC, UL supplemental and IEC 10x38mm DIN-Rail/panel mount protection modules up to 30 A

IEC specifications

RD16-3-508

RD16-3-508 with 6-pole conversion kit

Catalog no.		RD16-3-508	RD25-3-508	RD40-3-508	RD63-3-508	RD80-3-508
Thermal current I_{th} at 40°C (A)		16	25	40	63	80
Rated insulation voltage U_i (V)		800	800	800	800	800
Rated impulse withstand voltage U_{imp} (kV)		8	8	8	8	8
Rated operation currents Ie (A)						
Load duty category	Rated voltage	A/B [1]	A/B [1]	A/B [1]	A/B [1]	A/B [1]
500	AC-22 A/ AC-22 B	16/16	25/25	40/40	63/63	80/80
	AC-23A/ AC-23 B	16/16	25/25	25/25	63/63	63/63
690	AC-21 A/ AC-21 B	16/16	25/25	40/40	63/63	80/80
	AC-22 A/ AC-22 B	16/16	25/25	32/40	40/63	63/80
	AC-23A/ AC-23 B	16/16	25/25	25/25	40/40	40/40
Operational power in AC-23 (kW)						
400 Vac without prebreak AC [1, 2]		7.5	11	18.5	30	37
500 Vac without prebreak AC [1, 2]		7.5	11	15	30	37
690 Vac without prebreak AC [1, 2]		7.5	15	18.5	30	37
Overload capacity (U_e 415 Vac)						
Rated short-time withstand current 0.3 s. ICW (kA RMS) [3]		2.5	2.5	2.5	3	3
Rated short-time making capacity I_{cm} (kA peak) [3]		6	6	6	9	9
Fuse protected short-circuit withstand (kA RMS prospective)						
Prospective short-circuit current (kA RMS) [3]		50	50	50	50	50
Associated fuse rating (A) [3]		16	25	40	63	80
Connection						
Minimum Cu cable cross section (mm²)		1.5	1.5	1.5	2.5	2.5
Maximum Cu cable section (mm²)		16	16	16	35	35
Tightening torque min/max (N•m)		2/2.2	2/2.2	2/2.2	3.5/3.85	3.5/3.85

1 A/B: Category with index A = frequent operation; category with index B = infrequent operation.
2 The power value is given for information only; the current values vary from one manufacturer to another.
3 For a rated operating voltage, U_e = 400 Vac.

UL specifications

RD16-3-508

RD16-3-508 with 6-pole conversion kit

Catalog no.		RD16-3-508	RD25-3-508	RD40-3-508	RD63-3-508	RD80-3-508
UL standard		UL 508	UL 508	UL 508	UL 508	UL 508
Max ampacity		16 A	25 A	40 A	63 A	80 A
Handle operation		Front/Side	Front/Side	Front/Side	Front/Side	Front/Side
UL ratings						
Max voltage (AC)		600 Vac	600 Vac	600 Vac	600 Vac	600 Vac
Max. Hp ratings	3-phase, 208	3	7.5	7.5	15	15
	3-phase, 240	5	7.5	7.5	20	20
	3-phase, 480	10	15	20	40	40
	3-phase, 600	10	20	25	40	40
Electrical characteristics						
SCCR with fuse (kA)		65	65	10/65	50/65	50/65
Recommended upstream	Fuse class	J	J	J	J	J
	Max. fuse rating (A)	30	30	60/30	100/60	100/60
Terminals		Integral	Integral	Integral	Integral	Integral
Wire type		75°C Cu	75°C Cu	75°C Cu	75°C Cu	75°C Cu
Wire range and torque - lb-in (N•m)	Solid single	14-10, 26.5 (3)	14-10, 26.5 (3)	14-10, 26.5 (3)	14-10, 31.1 (3.5)	14-10, 31.1 (3.5)
	Solid dual	12, 26.5 (3)	12, 26.5 (3)	12, 26.5 (3)	12, 31.1 (3.5)	12, 31.1 (3.5)
	Stranded single	14-4, 26.5 (3)	14-4, 26.5 (3)	14-4 , 26.5 (3)	14-1, 31.1 (3.5)	14-1, 31.1 (3.5)
	Stranded dual	14-12, 26.5 (3)	14-12, 26.5 (3)	14-12, 26.5 (3)	10-6, 31.1 (3.5)	10-6, 31.1 (3.5)
Mechanical characteristics						
Endurances/cycles		10,000	10,000	10,000	10,000	10,000
Physical characteristics						
Dimensions		See drawings on product pages				
Weight- lb (kg)		0.5 (0.2)	0.5 (0.2)	0.5 (0.2)	0.7 (0.32)	0.7 (0.32)
Environmental						
Operating temperature		-20 to 70°C	-20 to 70°C	-20 to 70°C	-20 to 70°C	-20 to 70°C
Flammability rating		UL 94-V0	UL 94-V0	UL 94-V0	UL 94-V0	UL 94-V0
Accessories						
Handles	Direct	DIR-01	DIR-01	DIR-01	DIR-01	DIR-01
	Short selector/NEMA 1, 3R, 4, 4X, 12	H4X-01B	H4X-01B	H4X-01B	H4X-01B	H4X-01B
		H4X-01R	H4X-01R	H4X-01R	H4X-01R	H4X-01R
	Long selector/NEMA 1, 3R, 4, 4X, 12	H4X-02B	H4X-02B	H4X-02B	H4X-02B	H4X-02B
		H4X-02R	H4X-02R	H4X-02R	H4X-02R	H4X-02R
	Pistol handle/NEMA 1, 3R, 4, 4X, 12	H4X-03B	H4X-03B	H4X-03B	H4X-03B	H4X-03B
		H4X-03R	H4X-03R	H4X-03R	H4X-03R	H4X-03R
	Metallic hasp (HD) pistol handle/ NEMA 1, 3R, 4, 4X, 12	H4X-03BHD	H4X-03BHD	H4X-03BHD	H4X-03BHD	H4X-03BHD
		H4X-03RHD	H4X-03RHD	H4X-03RHD	H4X-03RHD	H4X-03RHD
Selector handle shafts - 5x5mm	5.9"/150mm	SH4-150	SH4-150	SH4-150	SH4-150	SH4-150
	7.9"/200mm	SH4-200	SH4-200	SH4-200	SH4-200	SH4-200
	12.6"/320mm	SH4-320	SH4-320	SH4-320	SH4-320	SH4-320
Pistol handle shafts - 5x5mm	7.9"/200mm	SH3-200	SH3-200	SH3-200	SH3-200	SH3-200
	12.6"/320mm	SH3-320	SH3-320	SH3-320	SH3-320	SH3-320
	15.75"/400mm	SH3-400	SH3-400	SH3-400	SH3-400	SH3-400
Selector handle shaft guide		SH-GUIDE1	SH-GUIDE1	SH-GUIDE1	SH-GUIDE1	SH-GUIDE1
Pistol handle shaft guide		SH-GUIDE2	SH-GUIDE2	SH-GUIDE2	SH-GUIDE2	SH-GUIDE2
Door mount kit		DOOR-508	DOOR-508	DOOR-508	DOOR-508	DOOR-508
Shrouds/switch amps	1-Pole	TSH1-1TB	TSH1-1TB	TSH1-1TB	—	—
	3-Pole (loadside and lineside)	TSH1-3TB	TSH1-3TB	TSH1-3TB	TSH2-3TB	TSH2-3TB
	Switched 4th pole/switch amps	POLE-16	POLE-25	POLE-40	—	—
	Ground module (conforms to IEC 60947-3)	GND-16-40	GND-16-40	GND-16-40	GND-63-80	GND-63-80
	Neutral module (conforms to IEC 60947-3)	NTRL-16-40	NTRL-16-40	NTRL-16-40	NTRL-63-80	NTRL-63-80
Auxiliary contacts	NO + NC (1 ea.)	BAC01	BAC01	BAC01	BAC01	BAC01
	(2) NO	BAC02	BAC02	BAC02	BAC02	BAC02
	AC ratings					
	Volts	240 Vac	240 Vac	240 Vac	240 Vac	240 Vac
	Amps	10	10	10	10	10
6-/8-pole conversion kit gangs two switches of same rating, 16-80 A switch amps		KIT-6POLE	KIT-6POLE	KIT-6POLE	KIT-6POLE	KIT-6POLE

— Not available.

UL 508 non-fused rotary disconnect switches —16, 25, 40, 63 and 80 A

For a complete assembly, select:

Select for standard application

Switch

Amps	Poles	SCCR @600V (kA)	Max. Class J fuse amps	Max horsepower rating, 3-Phase 208	220/240	440/480	600	Conductor AWG size/ type	Catalog no.
16	3	65	30	3	5	10	10	14-10 Sol, Dual 12 Sol, 14-4 Str, Dual 14-12 Str, 75°C Cu	RD16-3-508
25				7.5	7.5	15	20		RD25-3-508
40		10	60	7.5	7.5	20	25		RD40-3-508
		65	30						
63		50	100	15	20	40	40	14-10 Sol, Dual 12 Sol, 14-1 Str, Dual 10-6 Str, 75°C Cu	RD63-3-508
		65	60						
80		50	100	15	20	40	40		RD80-3-508
		65	60						

PLUS

Handles

Direct mount handle - mounts directly to switch, no shaft required

For switch cat. no.	Color	Test function	Padlockable	Catalog no.
All switches	Black	N	Y - On Switch	DIR-01

OR

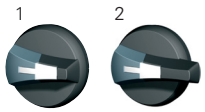

External front or right side operated selector handles - shaft required

NEMA type	Color	Handle length	Test function	Padlockable	Catalog no.
1, 3R, 4, 4X, 12	Black	Short	N	Y	H4X-01B (1)
	Red/yellow				H4X-01R (1)
	Black	Long			H4X-02B (2)
	Red/yellow				H4X-02R (2)

Or

External front operated pistol handles - shaft required

NEMA type	Color	Handle length	Test function	Padlockable	Defeatable	Catalog no.
1, 3R, 4, 4X, 12	Black	—	N	Y	Y	H4X-03B
	Red/yellow					H4X-03R

Metallic hasp (heavy duty) external front operated pistol handles - shaft required

NEMA type	Color	Handle length	Test function	Padlockable	Defeatable	Catalog no.
1, 3R, 4, 4X, 12	Black	—	N	Y	Y	H4X-03BHD
	Red/yellow					H4X-03RHD

+

Shafts for selector handles

Length — in (mm)	Mounting depth (X) - in (mm)	Catalog no.
5.9 (150)	3.50~7.60 (89~193)	SH4-150 (1)
7.9 (200)	3.50~9.50 (89~241)	SH4-200 (1)
12.6 (320)	3.50~14.9 (89~378)	SH4-320 (1)

Shafts for pistol handles

Length — in (mm)	Mounting depth (X) - in (mm)	Catalog no.
7.9 (200)	3.30~7.40 (84~188)	SH3-200 (2)
12.6 (320)	3.30~9.30 (84~236)	SH3-320 (2)
15.7 (400)	3.30~14.7 (84~373)	SH3-400 (2)

+

Shaft guides for selector and pistol handles

Handle type		Catalog no.
Selector	Required for 12.6" (320mm) long shafts, optional for other lengths	SH-GUIDE1
Pistol	Required for 15.7" (400mm) long shafts, optional for other lengths	SH-GUIDE2

+

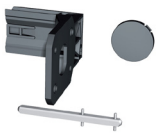

Door mount kit

For mounting switch on the right side of the enclosure or directly on the enclosure door using switch side operation shaft location. Kit includes a shaft. Order switch and selector handle separately.

Switch	Catalog no.
All switches - kit includes shaft	DOOR-508

AND...

Accessories

Aux. Contacts

Auxiliary contacts

Contact type	No. of contacts	Continuous amp rating	Voltage (Vac) rating	Max number of units per switch	Catalog no.
NO + NC	1 Ea.	10	240	2 (1 per side/4 contacts total)	BAC01
NO	2				BAC02

AND...

Shrouds

Terminal shrouds - includes terminal shroud for both lineside and loadside

Switch amps	Poles	Location on switch	Catalog no.
16-40	1 (for switched 4th pole)	Lineside and loadside	TSH1-1TB
16-40	3		TSH1-3TB
63-80			TSH2-3TB

AND...

4th pole

Switched 4th pole - converts 3-pole switch to 4-pole switch

Switch amps	Catalog no.
16	POLE-16
25	POLE-25
40	POLE-40

AND...

Gnd./neut. mods

Ground and Neutral Modules - provides unswitched ground or neutral pole - conforms to IEC 60947-3

Switch amps	Module Type	Catalog no.
16-40	Ground	GND-16-40
63-80		GND-63-80
16-40	Neutral	NTRL-16-40
63-80		NTRL-63-80

AND...

6 pole kit

Order switches separately

6-pole conversion kit - creates a 6-pole switch by ganging two 3-pole switches of equal rating

Switch amps	Catalog no.
All switches	KIT-6POLE*

* Kit ships with a direct handle. If external handle is needed order a selector handle and shaft for the UL 508 Rotary Disconnect Switches.

Note: To create an 8-pole switch from 16 to 40 amp switches, use two 3-pole switches of equal ratings plus two switched 4th poles (part # POLE-_).

Auxiliary contact configurations

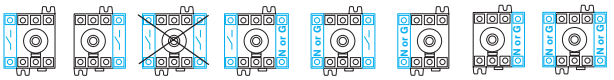

Ground and neutral module, and switched 4th pole configurations.

Dimensions — in (mm)

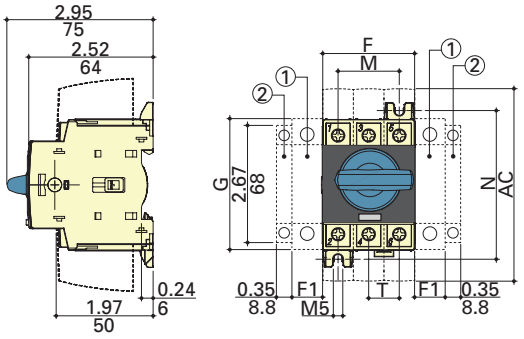

Direct handle operation

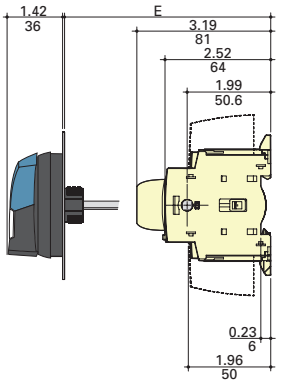

External front operation

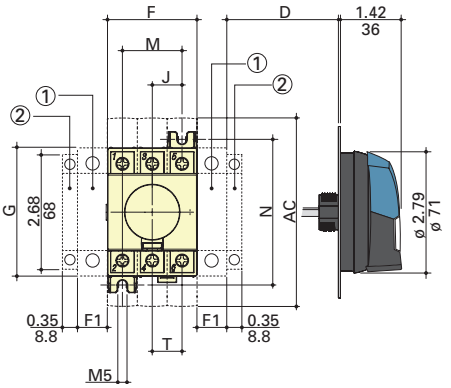

External side operation

1. Position for 1 switched 4th pole (1 per device max.), or ground or neutral module (2 per device max.) or 1 auxiliary contact.
2. Position for 1 auxiliary contact only.

Note: Maximum of 4 Auxiliary contacts, or 3 Auxiliary contacts + one ground or neutral module, or one switched 4th pole.

Switch amps	Overall dimensions				Terminal shroud AC	Switch body			Switch mounting			Connection T
	D min	D max	E min	E max		F	F1	G	J	M	N	
16 to 40	1.18 (30)	9.25 (235)	3.94 (100)	14.64 (372)	4.33 (110)	1.77 (45)	0.59 (15)	2.67 (68)	0.59 (15)	1.18 (30)	2.95 (75)	0.59 (15)
63 to 80	1.18 (30)	9.25 (235)	3.93 (100)	14.64 (372)	4.33 (110)	2.06 (53)	0.69 (18)	2.99 (76)	0.69 (18)	1.38 (35)	3.35 (85)	0.69 (18)

Dimensions — in (mm)

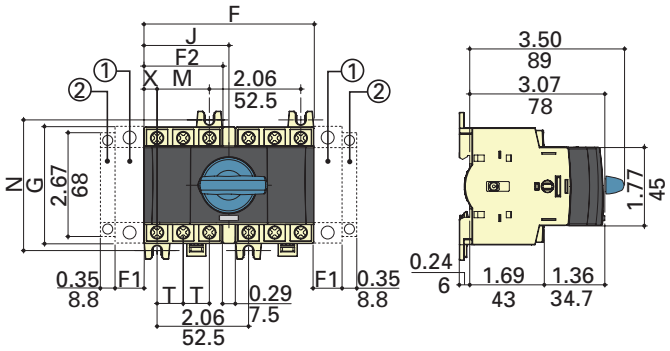

Direct front operation for 6/8-pole disconnects

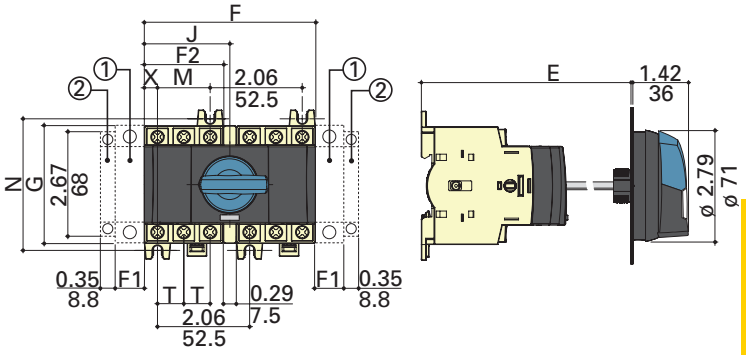

External front operation for 6/8-pole disconnects

1. Position for 1 switched 4th pole (1 per device max.) or 1 auxiliary contact.
2. Position for 1 auxiliary contact only.
Note: Maximum of 4 auxiliary contacts, or 3 auxiliary contacts + one switched 4th pole.

Switch amps	Overall dimensions				Switch body			Switch mounting		Connection	
	E min	E max	F	F1	F2	G	J	M	N	T	X
16 to 40	4.13 (105)	14.64 (372)	3.83 (98)	0.59 (15)	1.77 (45)	2.67 (68)	1.92 (48.75)	1.18 (30)	2.95 (75)	0.59 (15)	0.29 (8)
63 to 80	4.13 (105)	14.65 (372)	4.13 (105)	0.69 (18)	2.06 (53)	2.99 (76)	2.06 (52.5)	1.38 (35)	3.35 (85)	0.69 (18)	0.34 (9)

External selector and pistol handles

Handle type

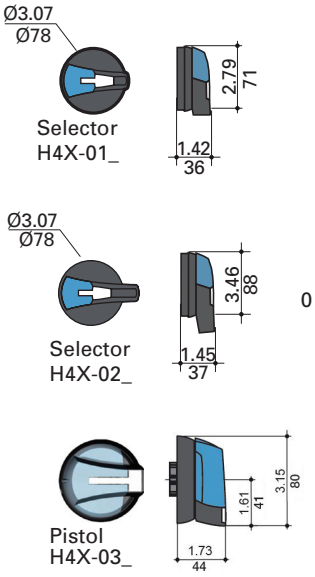

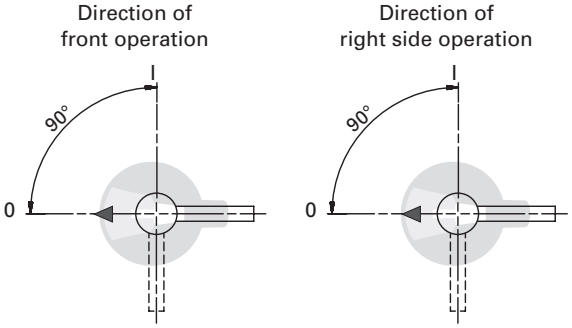

Door drilling layouts

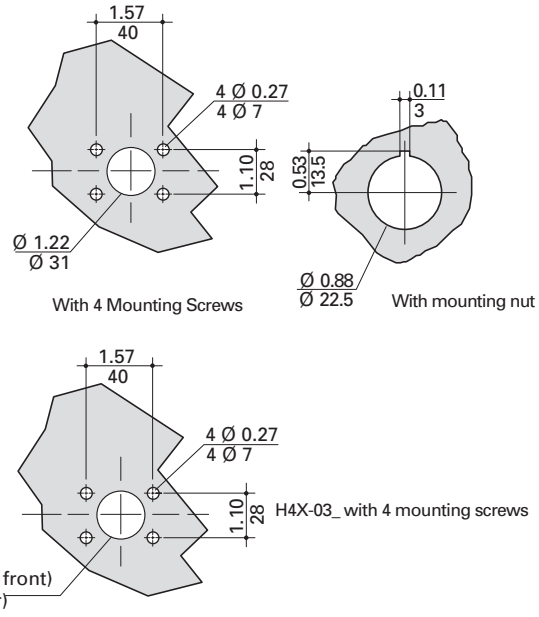

UL 98 and UL 508 enclosed disconnect switches

Enclosed fused and non-fused rotary disconnect switches from 16 to 1200 A in NEMA 1, 3R, 4, 4X, 12 enclosures.

Ratings

RoHS 2011/65/EU

- Volts
  - 600 Vac
  - 250-600 Vdc*
- Amps 16-1200 A
- SCCR
  - UL 98 25-200 kA
  - UL 508 10-65 kA

* Some non-fused disconnect switches are not rated for DC applications.

Agency information

- UL 98 Listed, Guide WIAX, WIAX7, File E182262
- UL 508 Listed, Guide NLRV, NLRV, File E155129
- cULus Listed to Canadian Standard 22.2, No. 14
- cULus Listed to Canadian Standard 22.2, No. 4
- Conforms with IEC 60947-3
- RoHS compliant
- CE

Operating temperature

- -20°C to 70°C

4X plastic enclosure flammability ratings

- Polycarbonate UL 94-5V A-0
- Fiberglass UL 94-5V

Field installed accessories

- Auxiliary contacts
- Terminal shrouds
- Switched 4th pole (UL 508 only)

Online resources

Visit Eaton.com/bussmannseries for:

- CAD drawings
- Instruction sheets
- UL information

Features

- UL 98 Listed for general purpose, main disconnect, or branch circuit protection up to 600 Vac/dc
- UL 508 Listed for motor disconnect applications up to 600 Vac
- Multiple field installed accessories enhance the enclosed disconnect switches to fit the desired application
- Lockout/tagout: Up to three 1/4" shank padlocks can be installed on external handles

NEMA 1, 3R, 4 and 12

NEMA 4X 304 stainless steel

NEMA 4X polycarbonate or fiberglass

UL 98 enclosed fused disconnects — 30 to 800 A

3-pole UL 98 600 Vac

Catalog number system:

ER 4X - 60 J 3 P B

ER

Enclosed Rotary disconnect

NEMA rating

1, 3R, 4, 4X (304 SST), 4P (4X Plastic), 12

Amp rating

30, 60, 100, 200, 400, 600, 800

Fuse class

J = Class J, L = Class L

Number of poles

3 = 3-pole

Handle type

P = Pistol

Handle color

B = Black, R = Red

NEMA 1, 3R, 4 and 12

NEMA 4X
304 stainless steel

NEMA 4X

30-800A UL 98 fused switches

Available Bussmann series fuses

Fuse class	Catalog symbol/type
J	LPJ time-delay, current limiting
	JKS fast-acting fuses
	DFJ high speed drive fuse
L	KRP-C time-delay, current limiting
	KTU fast-acting
	KLU time-delay
	KRP-CL (225-600 A)

Catalog numbers

All catalog numbers provided with integral or installed lugs and a black selector handle. Order Red/yellow handle by changing the suffix "B" to "R."

		NEMA enclosure type and catalog no.					
Switch amps	Fuse class	1	3R	4	4X plastic[1]	4X 304 stainless	12
30	J	ER1-30J3PB	ER3R-30J3PB	ER4-30J3PB	ER4P-30J3PB	ER4X-30J3PB	ER12-30J3PB
60		ER1-60J3PB	ER3R-60J3PB	ER4-60J3PB	ER4P-60J3PB	ER4X-60J3PB	ER12-60J3PB
100		ER1-100J3PB	ER3R-100J3PB	ER4-100J3PB	ER4P-100J3PB	ER4X-100J3PB	ER12-100J3PB
200		ER1-200J3PB	ER3R-200J3PB	ER4-200J3PB	ER4P-200J3PB	ER4X-200J3PB	ER12-200J3PB
400		ER1-400J3PB	ER3R-400J3PB	ER4-400J3PB	ER4P-400J3PB	ER4X-400J3PB	ER12-400J3PB
600		ER1-600J3PB	ER3R-600J3PB	ER4-600J3PB	ER4P-600J3PB	ER4X-600J3PB	ER12-600J3PB
800	L	ER1-800L3PB	ER3R-800L3PB	ER4-800L3PB	ER4P-800L3PB	ER4X-800L3PB	ER12-800L3PB

1 Enclosures ≤100 A are polycarbonate, flammability rating UL 94-5V A-V0, ≥200 A are fiberglass, flammability rating UL 94-5V.

Switch ratings

For wire types, ranges and terminal torques, see table on page 11-55.

				Voltage			
Switch amps	Switch cat. no.	Fuse class	Poles	Vac	Vdc	SCCR @ Vac (kA)	Max. Hp @ 600 Vac
30	RDF30J-3	J	3	600	250	200	20
60	RDF60J-3						50
100	RDF100J-3						75
200	RDF200J-3				N/A		150
400	RDF400J-3				250		350
600	RDF600J-3				600		500
800	RDF800L-3	L					

UL 98 enclosed fused disconnects — 30 to 800 A

Enclosure weights and dimensions

Catalog no. family	Amps	Fuse class	NEMA enclosure	H x W x D (in)	Mounting centers h x w (in) A	B	C	Weight (lbs)
ER_-30J	30	J	1, 3R, 4, 12	10x10x6	8.3x8.3	—	—	15
			4X-SST		—	10.7x8.3	8.3x10.7	
			4X-plastic [1]	12x10x6	—	12x5.6	7.6x10	8
ER_-60J	60		1, 3R, 4, 12		10.3x8.3	—	—	19
			4X-SST		—	12.7x8.3	8.3x10.7	
			4X-plastic [1]	13x13x6	—	14x7.6	9.6x12	11
ER_-100J	100		1, 3R, 4, 12	14x12x6	12.3x10.3	—	—	21
			4X-SST		—	14.7x10.3	12.3x12.7	
			4X-plastic [1]	13x13x6	—	14x7.6	9.6x12	12
ER_-200J	200		1, 3R, 4, 12	24x20x8	22.3x18.3	—	—	55
			4X-SST		—	24.7x18.3	22.3x20.7	
			4X-plastic [1]	27x21x10	—	25.75x14	—	39
ER_-400J	400		1, 3R, 4, 12	48x36x12	46.3x34.3	—	—	188
			4X-SST		—	48.7x34.3	46.3x36.7	
			4X-plastic [1]	51x37x14	—	50x28.5	—	186
ER_-600J	600		1, 3R, 4, 12	48x36x12	46.3x34.3	—	—	216
			4X-SST		—	48.7x34.3	46.3x36.7	
			4X-plastic [1]	51x37x14	—	50x28.5	—	214
ER_-800L	800	L	1, 3R, 4, 12	48x36x12	46.3x34.3	—	—	216
			4X-SST		—	48.7x34.3	46.3x36.7	
			4X-plastic [1]	51x37x14	—	50x28.5	—	214

1 Enclosures ≤100 A are polycarbonate, flammability rating UL 94-5V A-V0, ≥200 A are fiberglass, flammability rating UL 94-5V.

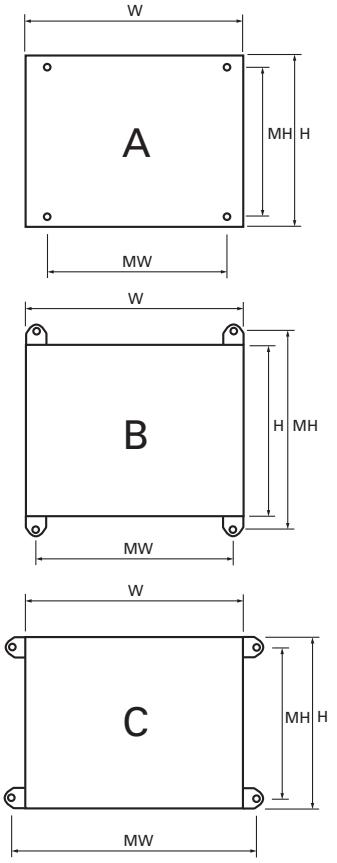

Available field-Installed accessories - order separately

Auxiliary contacts - for 30 to 800 amp switches

Contact type	No. of contacts	Cont. amp rating	Vac	Max. units per switch	Catalog no.
NO	1	10	600	4 (30 to 200 A)	BAC05
NC				8 (400 to 800 A)	BAC06

Terminal shrouds

For 200 to 800 amp switches - includes terminal shroud for lineside or loadside

Switch amps	Poles	Catalog no.
200	3	TSH8-3TB
400		TSH9-3TB
600-800		TSH10-3TB

UL 98 enclosed non-fused disconnects — 30 to 1200 A

3-pole UL 98 600 Vac

Catalog number system:

ER 4X - 60 N 3 P B

ER

Enclosed Rotary disconnect

NEMA rating

1, 3R, 4, 4X (304 SST), 4P (4X Plastic), 12

Amp rating

30, 60, 100, 200, 400, 600, 800, 1200

N = non-fused

Number of poles

3 = 3-pole

Handle type

P = Pistol

Handle color

B = Black, R = Red

NEMA 1, 3R, 4 and 12

NEMA 4X
304 stainless steel

NEMA 4X

200-1200A UL 98 non-fused switches

NEMA 1, 3R, 4 and 12

NEMA 4X
304 stainless steel

NEMA 4X

30-800A UL 98 non-fused switches

Catalog numbers

All Catalog numbers provided with integral or installed lugs and a black selector handle. Order Red/yellow handle by changing the suffix "B" to "R."

Amps	NEMA enclosure type and catalog no.					
	1	3R	4	4X plastic [1]	4X 304 stainless	12
30	ER1-30N3PB	ER3R-30N3PB	ER4-30N3PB	ER4P-30N3PB	ER4X-30N3PB	ER12-30N3PB
60	ER1-60N3PB	ER3R-60N3PB	ER4-60N3PB	ER4P-60N3PB	ER4X-60N3PB	ER12-60N3PB
100	ER1-100N3PB	ER3R-100N3PB	ER4-100N3PB	ER4P-100N3PB	ER4X-100N3PB	ER12-100N3PB
200	ER1-200N3PB	ER3R-200N3PB	ER4-200N3PB	ER4P-200N3PB	ER4X-200N3PB	ER12-200N3PB
400	ER1-400N3PB	ER3R-400N3PB	ER4-400N3PB	ER4P-400N3PB	ER4X-400N3PB	ER12-400N3PB
600	ER1-600N3PB	ER3R-600N3PB	ER4-600N3PB	ER4P-600N3PB	ER4X-600N3PB	ER12-600N3PB
800	ER1-800N3PB	ER3R-800N3PB	ER4-800N3PB	ER4P-800N3PB	ER4X-800N3PB	ER12-800N3PB
1200	ER1-1200N3PB	ER3R-1200N3PB	ER4-1200N3PB	N/ A	ER4X-1200N3PB	ER12-1200N3PB

1 Enclosures ≤100 A are polycarbonate, flammability rating UL 94-5V A-V0, ≥200 A are fiberglass, flammability rating UL 94-5V.

Switch ratings

For wire types, ranges and terminal torques, see table on page 11-72.

Amps	Switch catalog no.	Poles	Vac	SCCR (kA)	Max. Hp @ 600 Vac
30	RD30-3	3	600	100	25
60	RD60-3				50
100	RD100-3			25/100*	
200	RD200-3			200	200
400	RD400-3				350
600	RD600-3				
800	RD800-3			100	500
1200	RD1200-3				

* 25 kA @ 600 Vac, 100 kA @ 480 Vac.

UL 98 enclosed non-fused disconnects — 30 to 1200 A

Enclosure weights and dimensions

Catalog no. family	Amps	NEMA enclosure	H x W x D (in)	Mounting centers h x w (in) A	B	C	Weight (lbs)
ER_-30	30	1, 3R, 4, 12	10x8x6	8.3x6.3	—	—	11
		4X-SST		—	10.7x6.3	8.3x8.7	11
		4X-plastic (1)	9x9x6	—	10x3.6	5.6x8	5
ER_-60	60	1, 3R, 4, 12	10x8x6	8.3x6.3	—	—	12
		4X-SST		—	10.7x6.3	8.3x8.7	12
		4X-plastic (1)	9x9x6	—	10x3.6	5.6x8	5
ER_-100	100	1, 3R, 4, 12	12x10x6	10.3x8.3	—	—	12
		4X-SST		—	12.7x8.3	8.3x10.7	12
		4X-plastic (1)	13x13x6	—	14x7.6	9.6x12	8
ER_-200	200	1, 3R, 4, 12	20x16x8	18.3x14.3	—	—	39
		4X-SST		—	20.7x14.3	18.3x16.7	39
		4X-plastic (1)	20x17x12	—	21.5x10.1		31
ER_-400	400	1, 3R, 4, 12	36x30x8	34.3x28.3	—	—	122
		4X-SST		—	36.7x28.3	34.3x30.7	122
		4X-plastic (1)	37x32x14	—	38x28.9	—	103
ER_-600	600	1, 3R, 4, 12	48x36x12	46.3x34.3	—	—	209
		4X-SST		—	48.7x34.3	46.3x36.7	209
		4X-plastic (1)	51x37x 14	—	50x28.5	—	187
ER_-800	800	1, 3R, 4, 12	48x36x12	46.3x34.3	—	—	211
		4X-SST		—	48.7x34.3	46.3x36.7	211
		4X-plastic (1)	51x37x 14	—	50x28.5	—	189
ER_-1200	1200	1, 3R, 4, 12	60x36x16	58.3x34.3	—	—	268
		4X-SST	60x36x16	—	60.7x34.3	58.3x36.7	268

1 Enclosures ≤100 A are polycarbonate, flammability rating UL 94-5V A-V0, ≥200 A are fiberglass, flammability rating UL 94-5V.

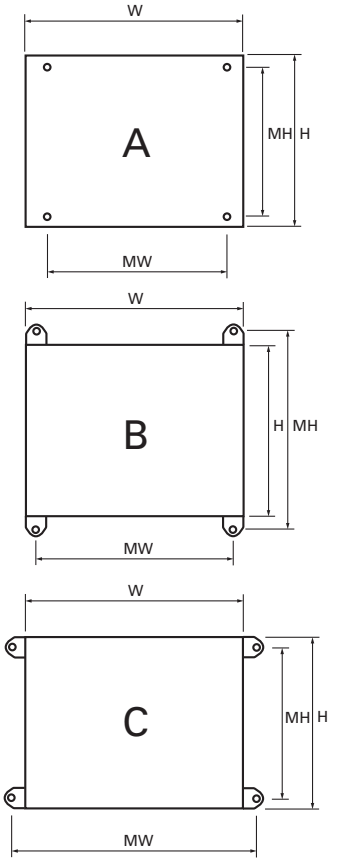

Available field-installed accessories - order separately

Auxiliary contacts for 30 to 1200 amp switches.

Switch amps	Contact type	No. of contacts	Cont. amp rating	Vac	Max. units per switch	Catalog no.
30-100	NO + NC	1 of each	10	240	4	BAC01*
	NO	2				BAC02*
200-1200	NO + NC	1 of each	10.1	125-250	2	BAC03**
	NO + NC	1 of each				BAC04**
	NO + NC	1 of each	1	125		BAC11**
	NO + NC	1 of each				BAC12**

* Two (2) Units per switch max.
**For one auxiliary contact, install either BAC03 or BAC11. For two auxiliary contacts, install BAC03 + BAC04, or BAC11 + BAC12.

Terminal shrouds for 200 to 800 amp switches

Switch amps	Poles	Location on switch	Catalog no.
30-100	3	Lineside and loadside	TSH3-3TB
200		Lineside	TSH4-3T
		Loadside	TSH4-3B
400		Lineside	TSH5-3T
		Loadside	TSH5-3B
600		Lineside or loadside	TSH6-3TB
800-1200			TSH7-3TB

UL 508 enclosed non-fused disconnect — 16 to 80 A

3-/6-pole UL 508 600 Vac

Catalog number system:

ER 4X - 63 N 6 P B

ER

Enclosed Rotary disconnect

NEMA rating

1, 3R, 4, 4X (304 SST), 4P (4X Plastic), 12

Amp rating

16, 25, 40, 63, 80

N = non-fused

Number of poles

3 = 3-pole, 6 = 6-pole

Handle type

S = Selector*, P = Pistol**

Handle color

B = Black, R = Red

* 6-Pole switches only, selector handle does not interlock the enclosure door.
**3-pole switches only.

NEMA 1, 3R, 4 and 12

NEMA 4X
304 stainless steel

NEMA 4X

16-80 A UL 508 non-fused switches

Catalog numbers

All catalog numbers provided with a black selector handle. Order red/yellow handle by changing the suffix "B" to "R."

Amps	Poles	NEMA enclosure and catalog no.					
		1	3R	4	4X plastic [1]	4X 304 stainless	12
16	3	ER1-16N3PB	ER3R-16N3PB	ER4-16N3PB	ER4P-16N3PB	ER4X-16N3PB	ER12-16N3PB
	6	ER1-16N6SB	ER3R-16N6SB	ER4-16N6SB	ER4P-16N6SB	ER4X-16N6SB	ER12-16N6SB
25	3	ER1-25N3PB	ER3R-25N3PB	ER4-25N3PB	ER4P-25N3PB	ER4X-25N3PB	ER12-25N3PB
	6	ER1-25N6SB	ER3R-25N6SB	ER4-25N6SB	ER4P-25N6SB	ER4X-25N6SB	ER12-25N6SB
40	3	ER1-40N3PB	ER3R-40N3PB	ER4-40N3PB	ER4P-40N3PB	ER4X-40N3PB	ER12-40N3PB
	6	ER1-40N6SB	ER3R-40N6SB	ER4-40N6SB	ER4P-40N6SB	ER4X-40N6SB	ER12-40N6SB
63	3	ER1-63N3PB	ER3R-63N3PB	ER4-63N3PB	ER4P-63N3PB	ER4X-63N3PB	ER12-63N3PB
	6	ER1-63N6SB	ER3R-63N6SB	ER4-63N6SB	ER4P-63N6SB	ER4X-63N6SB	ER12-63N6SB
80	3	ER1-80N3PB	ER3R-80N3PB	ER4-80N3PB	ER4P-80N3PB	ER4X-80N3PB	ER12-80N3PB
	6	ER1-80N6SB	ER3R-80N6SB	ER4-80N6SB	ER4P-80N6SB	ER4X-80N6SB	ER12-80N6SB

1 Polycarbonate enclosure flammability rating UL 94-5V A-V0.

Switch ratings

For wire types, ranges and terminal torques, see table on page 11-80.

Amps	Switch catalog no.	Vac	SCCR with max upstream Class J fuse	Max. Hp @ 600 V
16	RD16-3-508	600	65 kA /30 A	10
25	RD25-3-508			20
40	RD40-3-508		65 kA /30 A — 10 kA / 60 A	25
63	RD63-3-508		65 kA /60 A — 50 kA / 100 A	40
80	RD80-3-508		50 kA / 100 A	40

Note: Voltage, SCCR and horsepower ratings are the same for 3- and 6-pole switches.

UL 508 enclosed non-fused disconnect — 16 to 80 A

Enclosure weights and dimensions

NEMA enclosure	Poles	Switch amps	H x W x D (in)	Mounting centers h x w (in) A	B	C	Weight (lbs)
1, 3R, 4, 12	3	16-80	8x6x6	6.3x4.3	—	—	8
	6		10x8x6	8.3x6.3	—	—	11
4X-304 SST	3		8x6x6	—	8.7x4.3	6.3x6.7	8
	6		10x8x6	—	10.7x6.3	8.3x8.7	11
4X-plastic [1]	3	16-63	7.4x8.7x5.8	—	8x3.6	3.6x8	4
		80	9.4x8.7x5.9	—	10x3.6	5.6x8	5
	6	16-8 A	11.4x10.7x6.3	—	12x5.6	7.6x10	6

1 Polycarbonate.

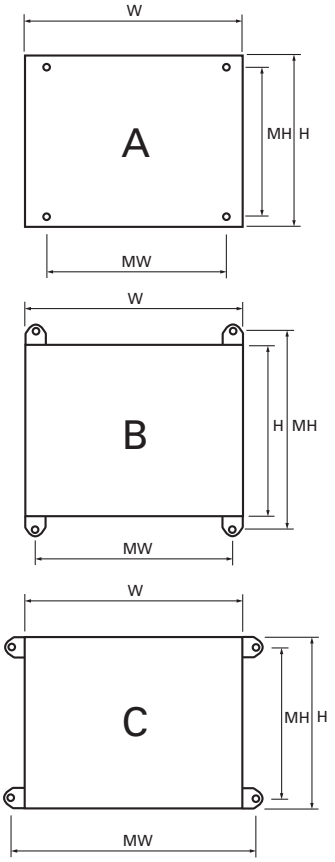

Available field-installed accessories - order separately

Auxiliary contacts

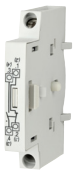

Contact type	No. of contacts	Cont. amp rating	Vac	Max. units per switch	Catalog no.
NO + NC	1 Ea.	10	240	2 (1 per side, 4 contacts total)	BAC01
NO	2				BAC02

Auxiliary contact configurations

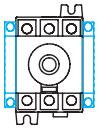

Terminal shrouds

Includes terminal shroud for both lineside and loadside.

Switch amps	Poles	Location on switch	Catalog no.
16-40	3	Lineside and loadside	TSH1-3TB
63-80			TSH2-3TB

Switched 4th pole

Converts 3-pole switch to 4-pole switch.

Switch amps	Catalog no.
16	POLE-16
25	POLE-25
40	POLE-40

X-ON Electronics

Largest Supplier of Electrical and Electronic Components

Click to view similar products for Control Switches ***category:***

Click to view products by Eaton ***manufacturer:***

Other Similar products are found below :

80887-99 80932-99 86855-00 88814-30 1424293-1 HW4S-2TC10 89721-12 89804-08 SSN RL01801 ASD2L20N-LVO 50051857-17 50099156-001-05 51.155R-15200 50058920-26 CP-FA51 CP-FA49 ACCU-SC/L-3000 PP9M PP87G PP86GA PP74G PP73M PP73G PP71G PP70G PP6G PP62G PP58BL PP86GB PP77GA PP76G PP4M PP47G PP46G PP41M PP40G PP32G RD-20 PP23M PP14M PP12G PORTAPRO POM-2708 PNB-2005 3057.0012 CV-075 CV-140SB CV-150 CV-150S