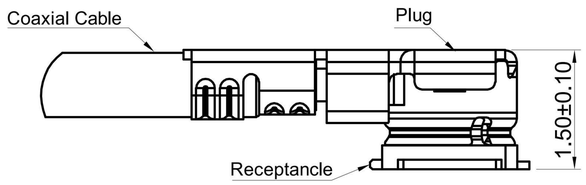

P.C.B LAYOUT SCALE 1 : 2

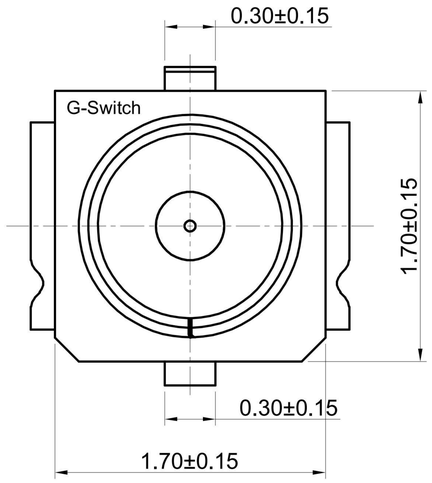

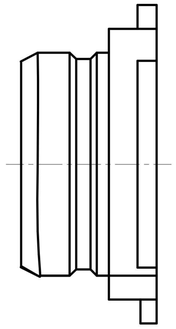

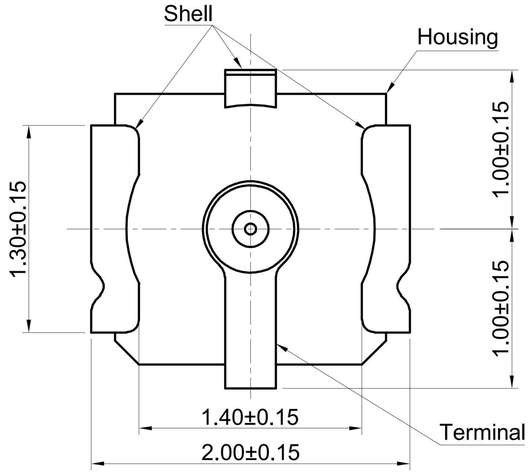

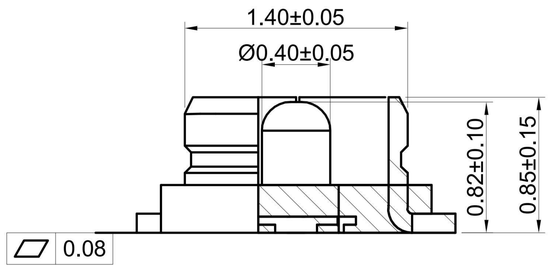

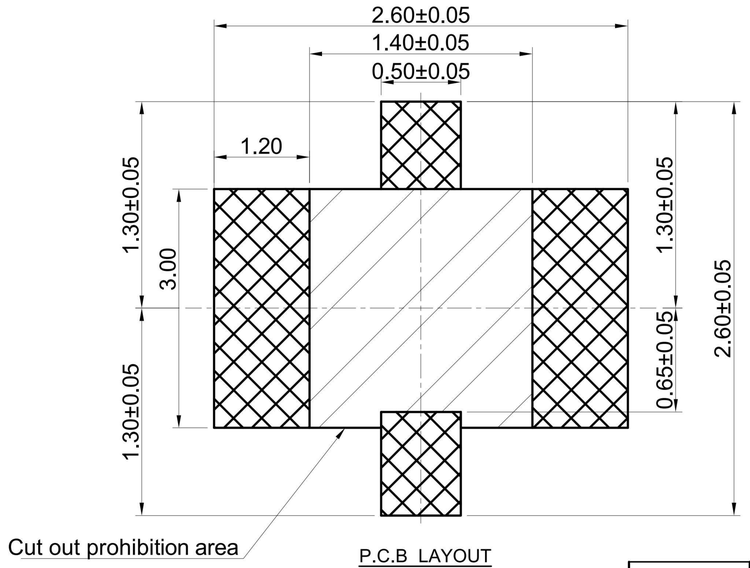

P.C.B LAYOUT

G-Switch RF Specification:

1.Contact Resistance: 20mΩ Max;
2.Dielectric Withstanging Voltage:
200V AC For 1 Minute;
3.Insulation Resistance: 1000MΩ Min;
4.Frequency Range: DC up to 6GHz
Vswr:1.3 Max. at 0~3GHz;
Vswr:1.4 Max. at 3~6GHz;
5.Operating Tempersture: -40 to +90 .

Item	Title	Material/Finish
1	Terminal	Copper Alloy/Gold Plated Over Ni
2	Shell	Copper Alloy/Gold Plated Over Ni
3	Housing	High Temp. Platic UL94V-0/Black

Pb Process Capable

RoHS Compliant 2002/95/EC

HALOGEN Compliant Halogen Free

SCALE: 9:1	UNIT: mm	Title:	RF III Receptacle Conn SMT 1.7×1.7×H0.85mm
SIZE: A4			
Unless otherwise General Tolerance:		Molde Code:	GT-RF3085A-01G
X. ±0.30		DRAWN	CHECKED / APPROVED / DATE
X.x ±0.20			
X.xx ±0.15			
X.xxx ±0.10			
Angles ±3°		Xia	Chen / Chen / 2022.11.30

品赞科技 b-Switch ®

REV: A0 SHEET: 1/1

X-ON Electronics

Largest Supplier of Electrical and Electronic Components

Click to view similar products for RF Connectors / Coaxial Connectors ***category:***

Click to view products by G-Switch ***manufacturer:***

Other Similar products are found below :

8915-1511-000 89674-0827 6002-7051-003 6059674-1 630059-000 M39030/3-01N 6501-1071-002 6769 7002-1572-002 7003-1542-011 7003-1572-002 7004-1512-000 7009-1511-004 7101-1541-010 7105-1521-002 7145-1521-002 7203-1571-003 7209-1511-011 7210-1511-040 7242-1511-000 73216-2241 73404-2300 7405-1521-005 7405-1521-802 8527 8547 FS11V 877931 8808-1511-001 9074-9513-000 PL11C-026 PL40-36 PL71-9 PL74C-221 9408-1113-000 980-8666-005 1200690078 1-201144-1 120919 R107003010W R112186000 R113053000W R113082097 R113236000 R113240000 R113240097 R114083000 R114670000W R123415000W R124072220W