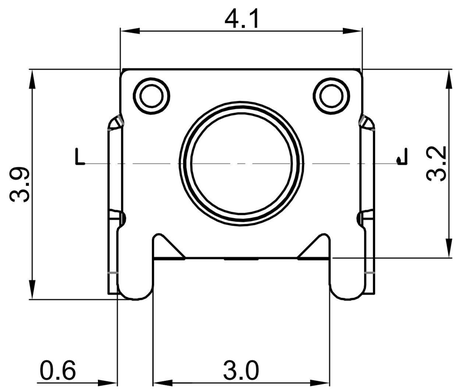

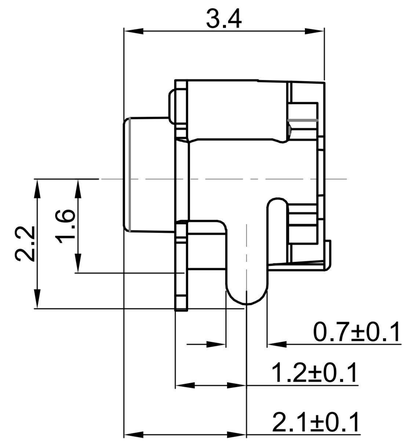

Circuit Diagram

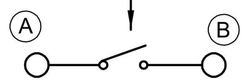

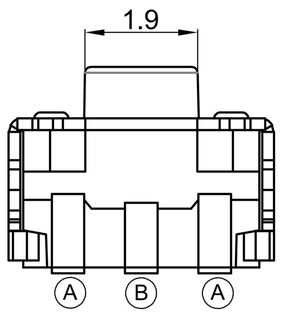

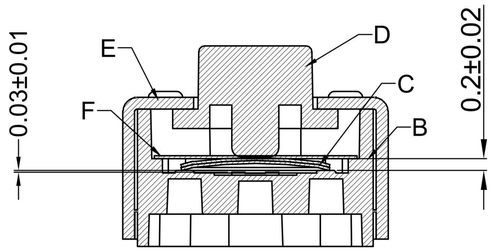

SECTION A-A

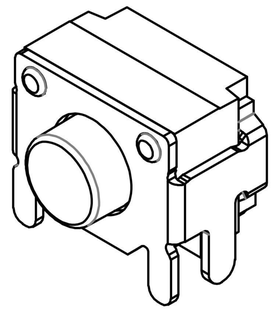

GT-TA108X-HXXX-LX

Operating Force
A=160gf
B=250gf

Switch Height
H034=3.4mm

Switch lifetime (Force)
L1=100,000 Cycles
L2=200,000 Cycles

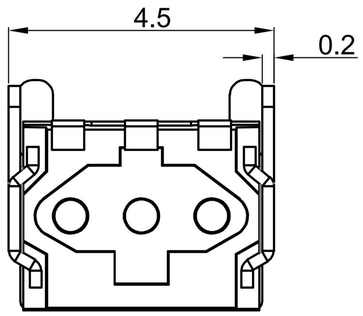

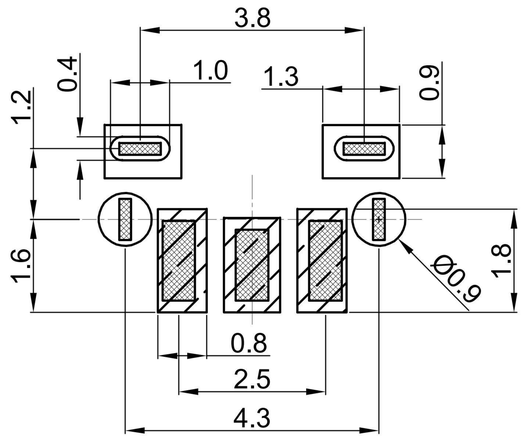

G-Switch Specification:

1.Operating temperature range:-40℃to+85℃
2.Rating:50mA.12V DC
3.Insulation resistance:100MΩ min.100V DC
4.Dielectric strength: 250V AC for 1 min
5.Contact Resistance:100m Ω max.
6.Travel: 0.2±0.05mm

NO.	PART NAME	MATERIAL	REMARK
A	TERMINAL	COPPER ALLOY	Ag PLATING
B	HOUSING	HIGH TEMPERATURE PLASTIC	BLACK
C	SPRING	STAINLESS STEEL	Ag PLATING ONE SIDE
D	PLASTIC BUTTON	HIGH TEMPERATURE PLASTIC	WHITE
E	COVER PLATE	COPPER ALLOY	Ag PLATING
H	YELLOW MEMBRANE	HIGH TEMPERATURE PLASTIC	YELLOW

Pb Process Capable

RoHS Compliant 2002/95/EC

HALOGEN Compliant Halogen Free

SCALE: 6.6:1	UNIT: mm	Title: Horizontal Tact Switch SMT 4.1×3.2×3.4mm CH=1.6mm			
SIZE: A4					
Unless otherwise General Tolerance: X. ±0.30, X.x ±0.20, X.xx ±0.15, X.xxx ±0.10, Angles ±3°		Molde Code: GT-TA108X-HXXX-LX			
		DRAWN	CHECKED	APPROVED	DATE
		Xia	Chen	Chen	2023.02.03

品赞科技 b-Switch ®

REV: A0 SHEET: 1/1

X-ON Electronics

Largest Supplier of Electrical and Electronic Components

Click to view similar products for Tactile Switches ***category:***

Click to view products by G-Switch ***manufacturer:***

Other Similar products are found below :

5GTH92001 5GTH9202242 6407-250V-25273P ADTSA62NV ADTSA62RV B3F-3123 1977177-8 1977266-1 ADTSA63NV ADTSM21NSVTR ADTSM25RVTR ADTSM32NVTR ADTSMW64RV FSMRA4JHA04 GS4.70F300QP KSC241J SP DELTA LFS 3FTL600RAS 3FTL640RAS Y96K132V0FPLFS 5GTH9658222 6407-250V-25343P ADTSM31NVTR 2-1977120-7 TSJW-5.2-260-TR KMT011MNGJLHS B3WN6002S 70-201.0 ADTSG648NV ADTSM62KSVTR ADTSM648NV 95C06E3RAT 5GTH96561 3ATH9Q FSMRA8JHA04 HARS0073 Y97HS12A5RAFP Y97BT23B2HAFP Y33R411N9FPLFT Y31C01402FPLFS PTS645SK50SMTR92 ADTSM32NVB KMS233GPWTLFG Y78B64124FP PTS638SK25SMTR2LFS Y96D113G0FP LFS Y33A812C5FP LFT Y56B2D120FP LFS PTS645 DVM83-BN125-2 LFS B3W 1000G KSC621G OL LFS