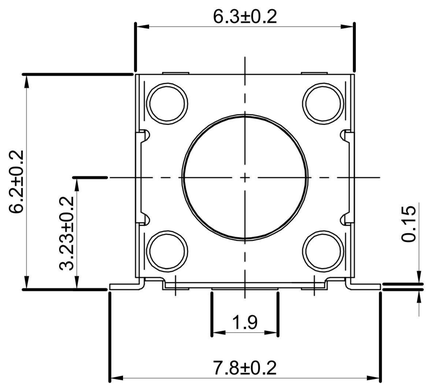

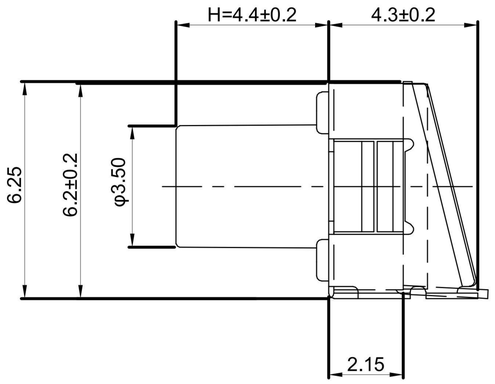

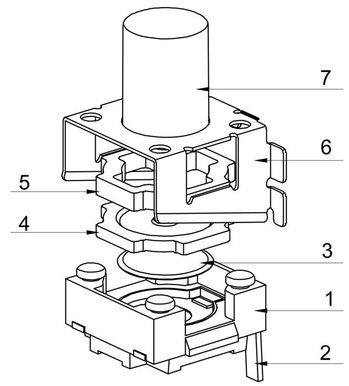

GT-TA205A-H044-L3

G-SWITCH

Operating Force
A=180gf
B=250gf
C=100gf
D=360gf

Switch Height（mm）
H023=2.3mm
H044=4.4mm

Switch lifetime (Force)
L3=300,000 Cycles
L5=500,000 Cycles

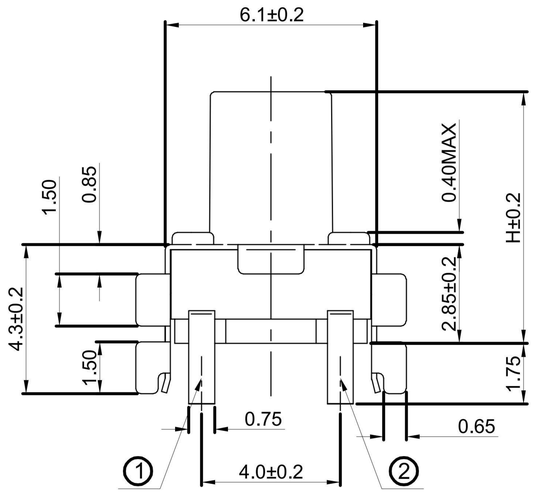

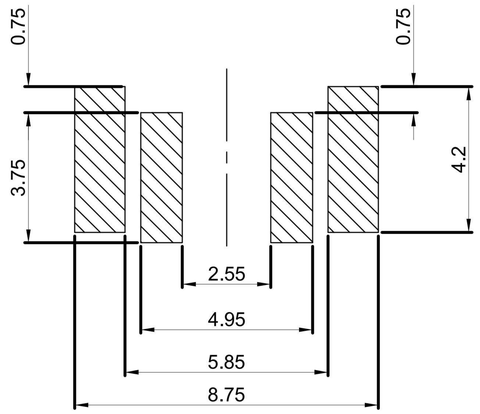

P.C.B LAND DIMENSION

CIRCUIT DIAGRAM

G-Switch Specification:

1.Operating temperature range：-40℃to+85℃
2.Rating：50mA.12V DC
3.Insulation resistance：100MΩ min.100V DC
4.Dielectric strength： 250V AC for 1 min
5.Contact resistance：100m Ω max.
6.Travel:0.3±0.1mm
7.Water Resistance：IPX7

NO.	PART NAME	QTY	MATERIAL	REMARK
7	STEM	1	PPA	White
6	COVER	1	SUS	Ag plating
5	PRESS PAD	1	PPA	
4	DUST PAD	1	RUBBER	
3	CONTACT FORM	1	SUS	Ag plating
2	TERMINAL	1	H65	Ag plating
1	BASE	1	PA6T	

Pb Process Capable

RoHS Compliant 2002/95/EC

HALOGEN Compliant Halogen Free

SCALE: 4:1	UNIT: mm	Title: Horizontal Tact Switch 6.3×6.2×4.3+H4.4mm Smt Bracket Type IPX7			
SIZE: A4					
Unless otherwise General Tolerance: X. ±0.30, X.x ±0.20, X.xx ±0.15, X.xxx ±0.10, Angles ±3°		Molde Code: GT-TA205A-H044-L3			
		DRAWN	CHECKED	APPROVED	DATE
		Xia	Chen	Chen	2022.11.01

品赞科技 b-Switch ®

REV: A0 SHEET: 1/1

X-ON Electronics

Largest Supplier of Electrical and Electronic Components

Click to view similar products for Tactile Switches ***category:***

Click to view products by G-Switch ***manufacturer:***

Other Similar products are found below :

5GTH92001 5GTH9202242 6407-250V-25273P ADTSA62NV ADTSA62RV B3F-3123 1977177-8 1977266-1 ADTSA63NV ADTSM21NSVTR ADTSM25RVTR ADTSM32NVTR ADTSMW64RV FSMRA4JHA04 GS4.70F300QP KSC241J SP DELTA LFS 3FTL600RAS 3FTL640RAS Y96K132V0FPLFS 5GTH9658222 6407-250V-25343P ADTSM31NVTR 2-1977120-7 TSJW-5.2-260-TR KMT011MNGJLHS B3WN6002S 70-201.0 ADTSG648NV ADTSM62KSVTR ADTSM648NV 95C06E3RAT 5GTH96561 3ATH9Q FSMRA8JHA04 HARS0073 Y97HS12A5RAFP Y97BT23B2HAFP Y33R411N9FPLFT Y31C01402FPLFS PTS645SK50SMTR92 ADTSM32NVB KMS233GPWTLFG Y78B64124FP PTS638SK25SMTR2LFS Y96D113G0FP LFS Y33A812C5FP LFT Y56B2D120FP LFS PTS645 DVM83-BN125-2 LFS B3W 1000G KSC621G OL LFS