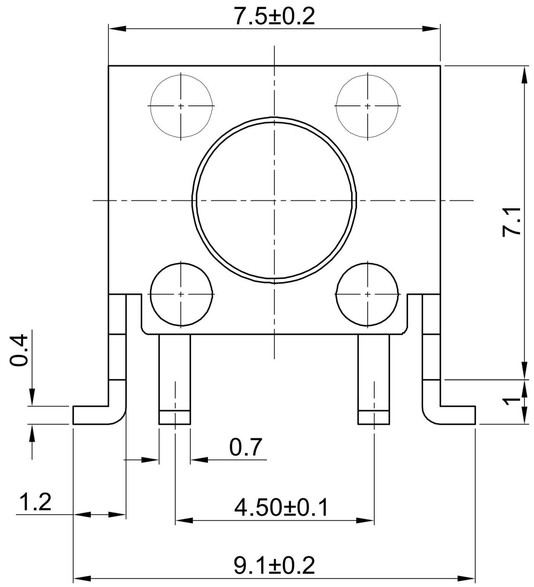

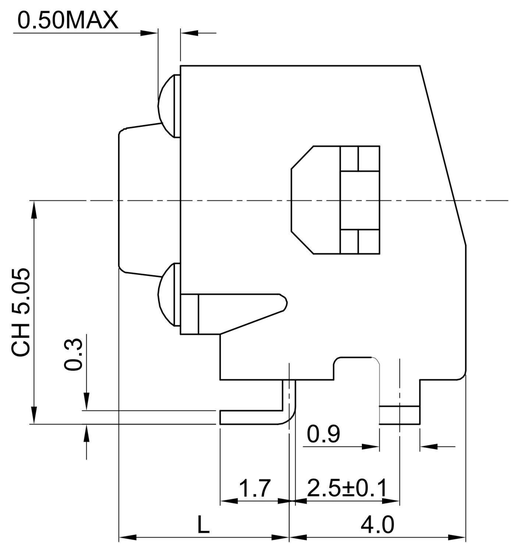

GT-TC050X-HXXX-LX

Operating Force
A=160gf
B=250gf
C=100gf

Switch Height
H043=4.3 L=3.15 ØA3.5mm
H050=5.0 L=3.85 ØA3.5mm
H070=7.0 L=5.85 ØA3.4mm

Switch lifetime (Force)
L1=100,000 Cycles

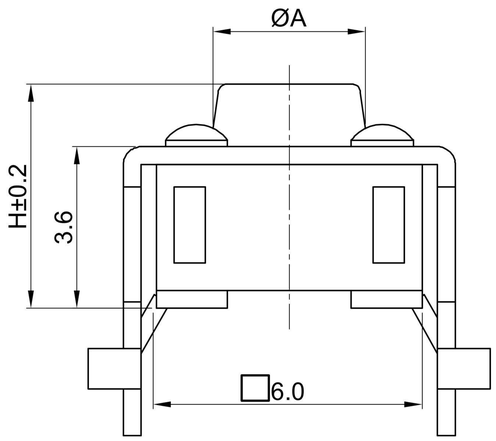

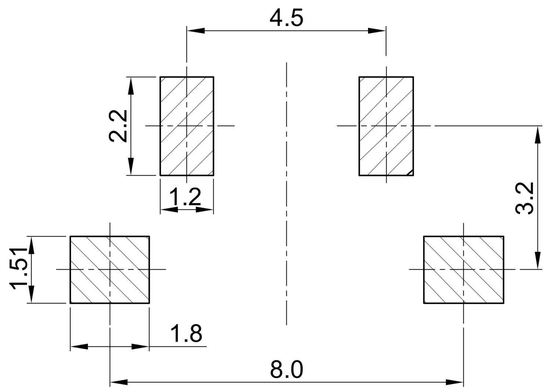

P.C.B LAND DIMENSION
TOP VIEW

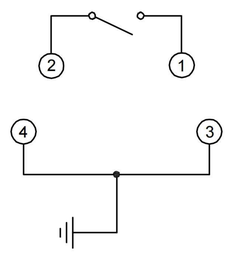

CIRCUIT DIAGRAM

G-Switch Specification:
1.Operating temperature range：-40℃to+85℃
2.Rating：50mA.12V DC
3.Insulation resistance：100MΩ min.100V DC
4.Dielectric strength： 250V AC for 1 min
5.Contact resistance：100m Ω max.
6.Travel: 0.25±0.1mm

NO.	PART NAME	QTY	MATERIAL	REMARK
5	STEM	1Pcs	FR52	
4	COVER	1Pcs	Cold rolled	Plating Sn
3	CONTACT FORM	1Pcs	SUS	Ag plating
2	TERMINAL	1Pcs	Brass	Ag plating
1	BASE	1Pcs	PA6T	

Pb Process Capable
RoHS Compliant 2002/95/EC
HALOGEN Compliant Halogen Free

SCALE: 5:1	UNIT: mm	Title: Horizontal Tact Switch Ch=5.05mm SMT 7.5×7.1×Hmm	
SIZE: A4		Molde Code: GT-TC050X-HXXX-LX	
Unless otherwise General Tolerance: X. ±0.30, X.x ±0.20, X.xx ±0.15, X.xxx ±0.10, Angles ±3°		DRAWN: Xia	CHECKED: Chen
		APPROVED: Chen	DATE: 2022.12.17
		REV: A0	SHEET: 1/1

品赞科技 b-Switch ®

X-ON Electronics

Largest Supplier of Electrical and Electronic Components

Click to view similar products for Tactile Switches ***category:***

Click to view products by G-Switch ***manufacturer:***

Other Similar products are found below :

5GTH92001 5GTH9202242 6407-250V-25273P ADTSA62NV ADTSA62RV B3F-3123 1977177-8 1977266-1 ADTSA63NV ADTSM21NSVTR ADTSM25RVTR ADTSM32NVTR ADTSMW64RV FSMRA4JHA04 GS4.70F300QP KSC241J SP DELTA LFS 3FTL600RAS 3FTL640RAS Y96K132V0FPLFS 5GTH9658222 6407-250V-25343P ADTSM31NVTR 2-1977120-7 TSJW-5.2-260-TR KMT011MNGJLHS B3WN6002S 70-201.0 ADTSG648NV ADTSM62KSVTR ADTSM648NV 95C06E3RAT 5GTH96561 3ATH9Q FSMRA8JHA04 HARS0073 Y97HS12A5RAFP Y97BT23B2HAFP Y33R411N9FPLFT Y31C01402FPLFS PTS645SK50SMTR92 ADTSM32NVB KMS233GPWTLFG Y78B64124FP PTS638SK25SMTR2LFS Y96D113G0FP LFS Y33A812C5FP LFT Y56B2D120FP LFS PTS645 DVM83-BN125-2 LFS B3W 1000G KSC621G OL LFS