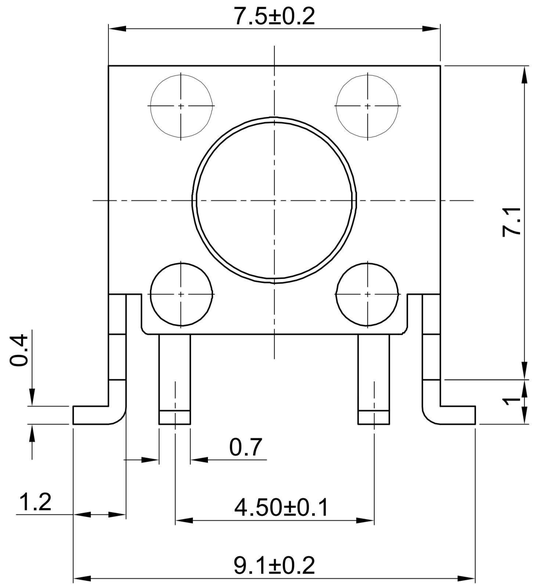


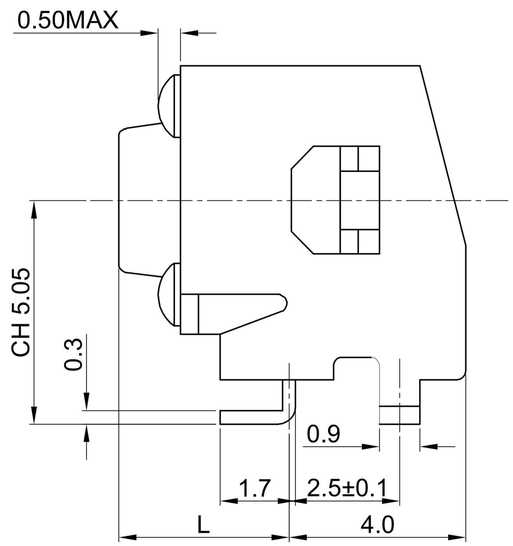

# GT-TC050X-HXXX-LX

**Operating Force**
A=160gf
B=250gf
C=100gf

**Switch Height**
H043=4.3 L=3.15 ØA3.5mm
H050=5.0 L=3.85 ØA3.5mm
H070=7.0 L=5.85 ØA3.4mm

**Switch lifetime (Force)**
L1=100,000 Cycles

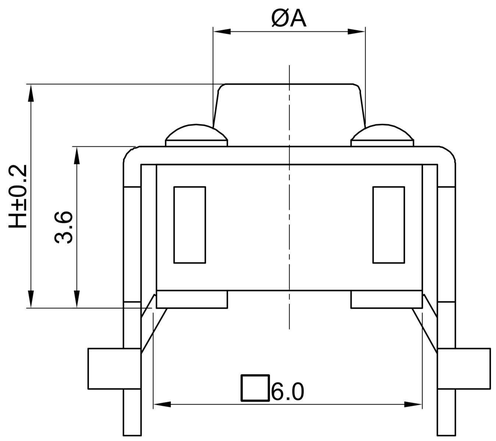


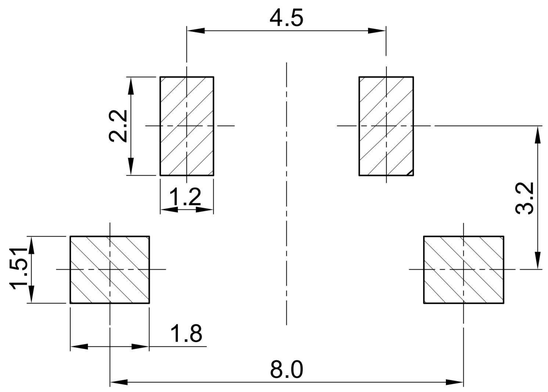


P.C.B LAND DIMENSION
TOP VIEW

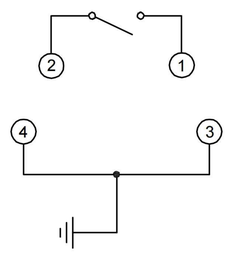


CIRCUIT DIAGRAM

**G-Switch Specification:**
1.Operating temperature range：-40℃to+85℃
2.Rating：50mA.12V DC
3.Insulation resistance：100MΩ min.100V DC
4.Dielectric strength： 250V AC for 1 min
5.Contact resistance：100m Ω max.
6.Travel: 0.25±0.1mm

| NO. | PART NAME | QTY | MATERIAL | REMARK |
|---|---|---|---|---|
| 5 | STEM | 1Pcs | FR52 | |
| 4 | COVER | 1Pcs | Cold rolled | Plating Sn |
| 3 | CONTACT FORM | 1Pcs | SUS | Ag plating |
| 2 | TERMINAL | 1Pcs | Brass | Ag plating |
| 1 | BASE | 1Pcs | PA6T | |

Pb Process Capable
RoHS Compliant 2002/95/EC
HALOGEN Compliant Halogen Free

| | | | |
|---|---|---|---|
| SCALE: 5:1 | UNIT: mm | Title: Horizontal Tact Switch Ch=5.05mm SMT 7.5×7.1×Hmm | |
| SIZE: A4 | | Molde Code: GT-TC050X-HXXX-LX | |
| Unless otherwise General Tolerance: X. ±0.30, X.x ±0.20, X.xx ±0.15, X.xxx ±0.10, Angles ±3° | | DRAWN: Xia | CHECKED: Chen |
| | | APPROVED: Chen | DATE: 2022.12.17 |
| | | REV: A0 | SHEET: 1/1 |

品赞科技 b-Switch ®

## X-ON Electronics

Largest Supplier of Electrical and Electronic Components

***Click to view similar products for*** Tactile Switches ***category:***

***Click to view products by*** G-Switch ***manufacturer:***

Other Similar products are found below :

5GTH92001 5GTH9202242 6407-250V-25273P ADTSA62NV ADTSA62RV B3F-3123 1977177-8 1977266-1 ADTSA63NV ADTSM21NSVTR ADTSM25RVTR ADTSM32NVTR ADTSMW64RV FSMRA4JHA04 GS4.70F300QP KSC241J SP DELTA LFS 3FTL600RAS 3FTL640RAS Y96K132V0FPLFS 5GTH9658222 6407-250V-25343P ADTSM31NVTR 2-1977120-7 TSJW-5.2-260-TR KMT011MNGJLHS B3WN6002S 70-201.0 ADTSG648NV ADTSM62KSVTR ADTSM648NV 95C06E3RAT 5GTH96561 3ATH9Q FSMRA8JHA04 HARS0073 Y97HS12A5RAFP Y97BT23B2HAFP Y33R411N9FPLFT Y31C01402FPLFS PTS645SK50SMTR92 ADTSM32NVB KMS233GPWTLFG Y78B64124FP PTS638SK25SMTR2LFS Y96D113G0FP LFS Y33A812C5FP LFT Y56B2D120FP LFS PTS645 DVM83-BN125-2 LFS B3W 1000G KSC621G OL LFS