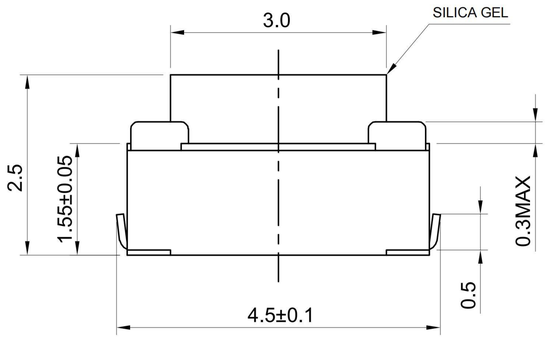

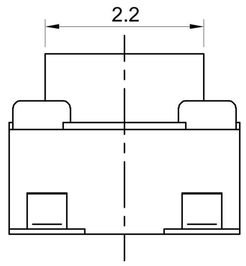

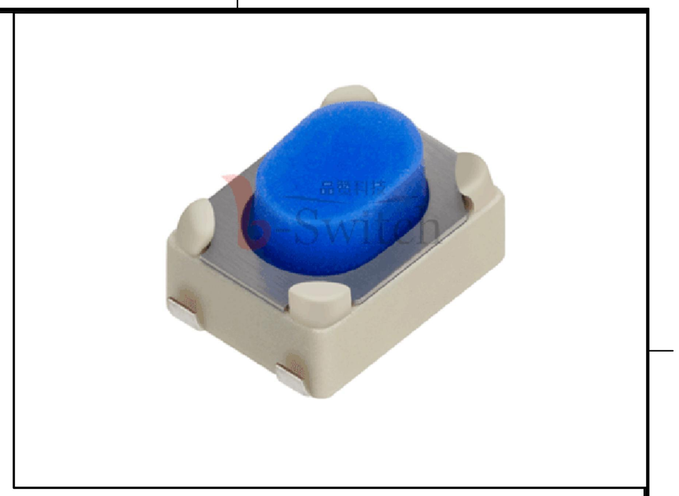

GT-TS048B-H025-L1

G-SWITCH

Operating Force
A=180gf
B=250gf
C=100gf
D=400gf

Switch Height (mm)
H025=2.5mm

Switch lifetime (Force)
L1=100,000 Cycles

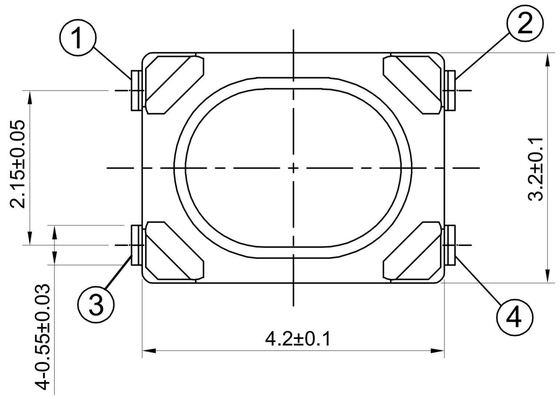

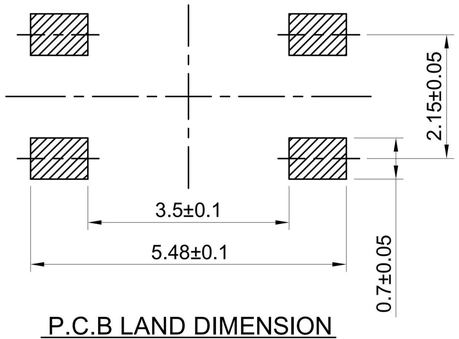

P.C.B LAND DIMENSION

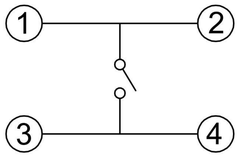

CIRCUIT DIAGRAM

G-Switch Specification:

1.Operating temperature range: -40℃to+85℃
2.Rating: 50mA.12V DC
3.Insulation resistance: 100MΩ min.100V DC
4.Dielectric strength: 250V AC for 1 min
5.Contact resistance: 100m Ω max.
6.Travel: 0.2±0.1mm

NO.	PART NAME	QTY	MATERIAL	REMARK
5	STEM	1	SILICA GEL	BLUE
4	COVER	1	SUS	Ag plating
3	CONTACT FORM	1	SUS	Ag plating
2	TERMINAL	4	BRASS	Ag plating
1	BASE	1	LCP-130i	

Pb Process Capable

RoHS Compliant 2002/95/EC

HALOGEN Compliant Halogen Free

SCALE: 8.3:1	UNIT: mm	Title: Vertical Tact Switch Silica gel Smt U Type: 3.2×4.2×2.5mm	品赞科技 b-Switch ®
SIZE: A4			
Unless otherwise General Tolerance: X. ±0.30, X.x ±0.20, X.xx ±0.15, X.xxx ±0.10, Angles ±3°		Molde Code: GT-TS048B-H025-L1	

DRAWN	CHECKED	APPROVED	DATE	REV:	SHEET:
Xia	Chen	Chen	2022.11.01	A0	1/1

X-ON Electronics

Largest Supplier of Electrical and Electronic Components

Click to view similar products for Tactile Switches ***category:***

Click to view products by G-Switch ***manufacturer:***

Other Similar products are found below :

5GTH92001 5GTH9202242 6407-250V-25273P ADTSA62NV ADTSA62RV B3F-3123 1977177-8 1977266-1 ADTSA63NV ADTSM21NSVTR ADTSM25RVTR ADTSM32NVTR ADTSMW64RV FSMRA4JHA04 GS4.70F300QP KSC241J SP DELTA LFS 3FTL600RAS 3FTL640RAS Y96K132V0FPLFS 5GTH9658222 ADTSM31NVTR EVQ-P1D05K 2-1977120-7 TSJW-5.2-260-TR KMT011MNGJLHS ADTSG648NV ADTSM62KSVTR ADTSM648NV 95C06E3RAT 5GTH96561 3ATH9Q FSM4JSMLXTR FSM4JSMXL FSMRA8JHA04 HARS0073 Y97HS12A5RAFP Y97BT23B2HAFP Y33R411N9FPLFT Y31C01402FPLFS PTS645SK50SMTR92 ADTSM32NVB KMS233GPWTLFG Y78B42324FP Y33R21116FPLFT Y31B43131FPLFG Y78B64124FP Y71243251FP Y33R31119FPLFT Y97HS12A5TAFP PTS638SK25SMTR2LFS