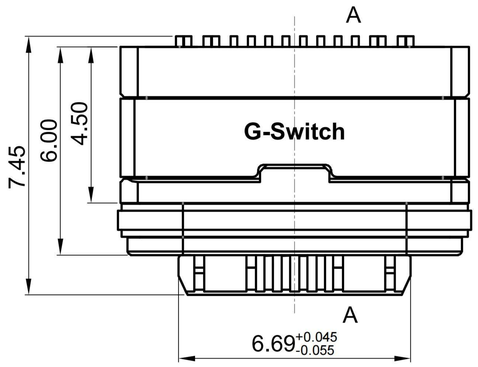

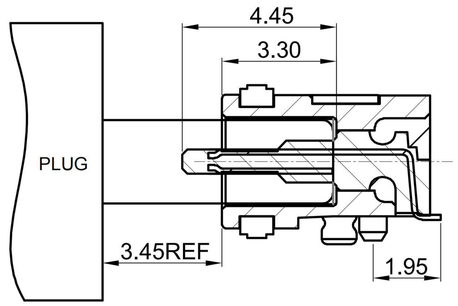

After mating

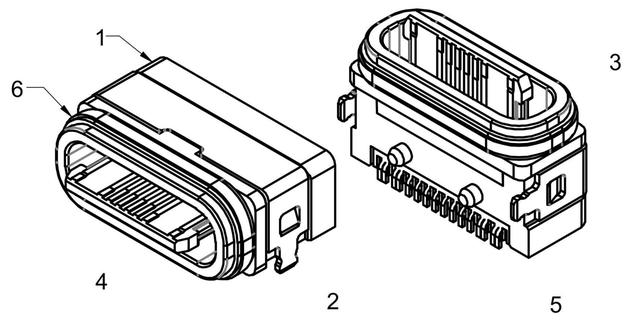

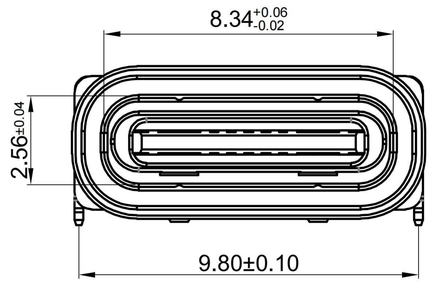

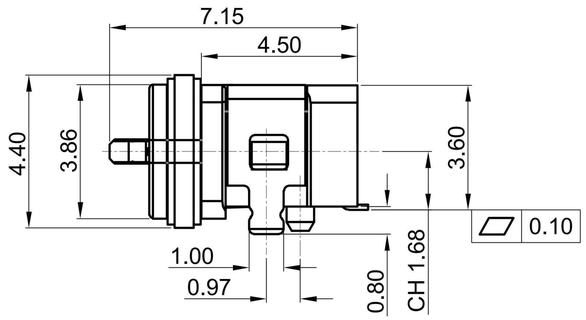

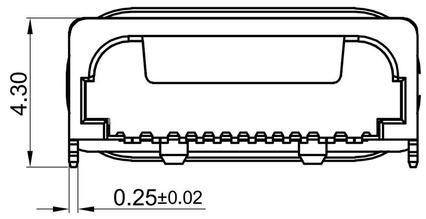

G-Switch USB-C Specification:

1.Current rating:3A on Vbus/1.25A on Vconn/0.25A on other
2.Dielectric Voltage:100V AC/minute
3. Contact resistance: 40mΩ Max
4. Insulation resistance: 100MΩ Min
5. Temperature range: -40 °C ~ 85 °C
6. Mating force : 5N~20N
7.Unmating force: 8N~20N
8. Durability:10,000 Cycles
9.Waterproof: IP-X7
10.Salt fog:48H

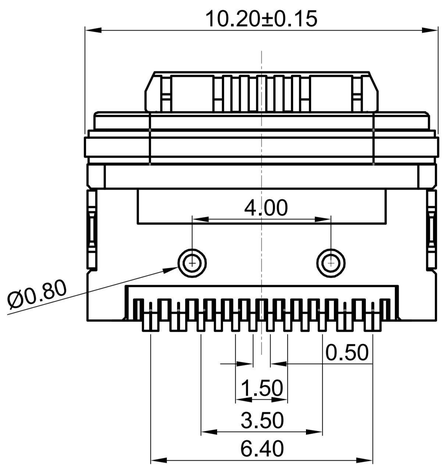

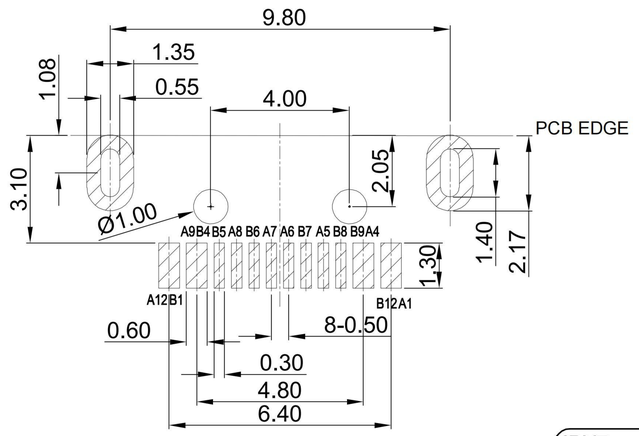

PCB Layout For Reference Only Tolerance ±0.05mm

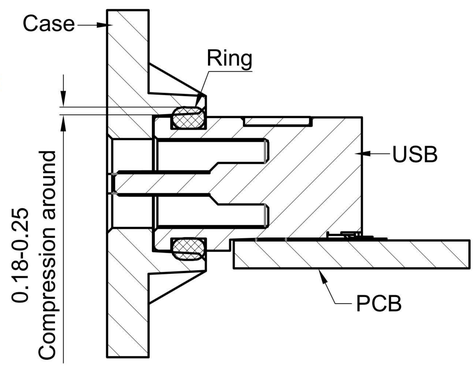

Compression recommenco ded is 30% -40% of the thickness of the waterproof ring

A1	A2	A3	A4	A5	A6	A7	A8	A9	A10	A11	A12
GND			VBUS	CC1	D+	D-	SBU1	VBUS			GND
First			First	Second	Second	Second	Second	First			First

B12	B11	B10	B9	B8	B7	B6	B5	B4	B3	B2	B1
GND			VBUS	SBU2	D-	D+	CC2	VBUS			GND
First			First	Second	Second	Second	Second	First			First

NO.	PARTS	MATERIAL	REMARKS
1	OUT SHELL	HIGH TEMPERATURE PLASTIC	LCP BLACK UL 94 V-0
2	SHELL	STAINLESS STEEL	NI PLATED
3	MID PLATE	STAINLESS STEEL	--
4	HOUSING	HIGH TEMPERATURE PLASTIC	LCP BLACK UL 94 V-0
5	TERMINALS	COPPER ALLOY	Au3u" Plating On Contact Area GF On Solder Area
6	WATERPROOF RING	SILICA GEL	RED

IPX7

1m/30min Soak

Pb Process Capable

RoHS Compliant 2002/95/EC

HALOGEN Compliant Halogen Free

SCALE: 1:1	UNIT: mm	Title: Horizontal Type-c 16P Female SMT CH=1.68 L=6.0mm	
SIZE: A4			
Unless otherwise General Tolerance: X. ±0.20, X.x ±0.15, X.xx ±0.10, X.xxx ±0.05, Angles ±3°		Molde Code: GT-USB-7030A	
		DRAWN: Xia	CHECKED: Chen
		APPROVED: Chen	DATE: 2022.12.09
		REV: A0	SHEET: 1/2

品赞科技 b-Switch ®

X-ON Electronics

Largest Supplier of Electrical and Electronic Components

Click to view similar products for USB Connectors ***category:***

Click to view products by G-Switch ***manufacturer:***

Other Similar products are found below :

950 A-USB A-LP-SMT-C A-USB B-TOP-C MUSBD11135 17-200721 217450-1 KMBVX-TH-5S-B30 KUSBX-AS2N-W KUSBX-SMT2AP1S-W30 935 957 30-498-6 SK-60A-2 1734082-1 30-470 30-489 30-541 MAB 5 S A-USB A-2P-C MIKROE-1451 USBFTVSCCG 1-1734084-2 MUSBA81130 NK-27-32SL NK-L8-22C-5/8 10135326-001LF 4198 690-024-633-031 UB-20PMFP-LC7001 17-200011 UB-20AFMM-LL7A01 CAP-WCCMLPB1 CAP-WCCMLPC1 2274475-3 914-614A2025S10200 USB3FTV7SAGF059 USB3FTV2SAZNF459 USB3FTV7SAZNF459 HYCW153-USBD05-500B HYCW219-USBD05-075B HYCW148-USBD05-117B HYCW149-USBD05-740B HYCW204-USBD05-108B HYCW214-USBA04-113B HYCW213-USBA04-113B KMMX-BSMT35S-1-B30TR 2345986-1 10082141-N340LF 10117836-011LF GSB3C3133DSYHR