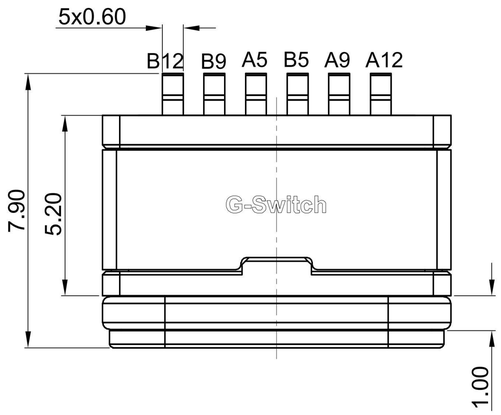

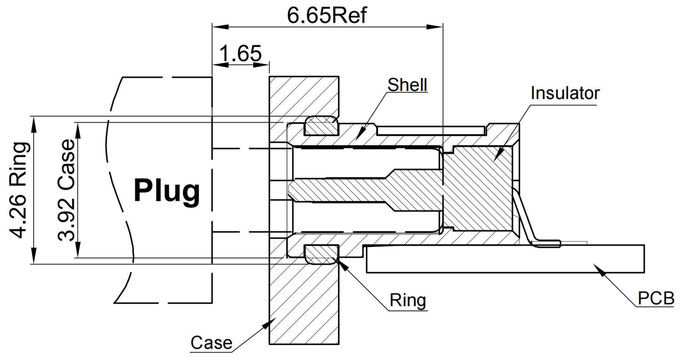

Waterproof Diagram
For Reference Only

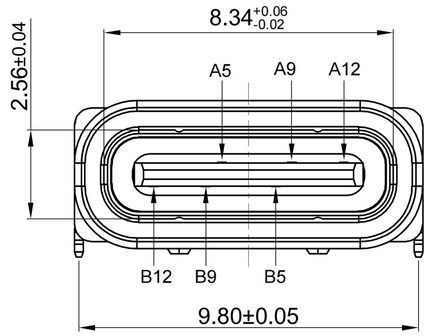

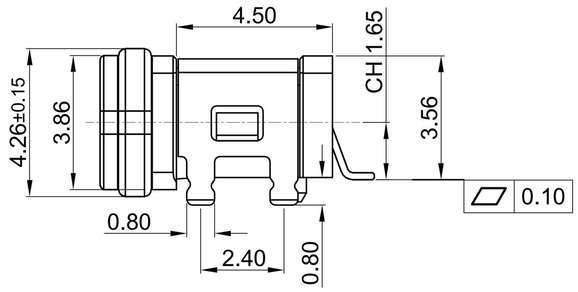

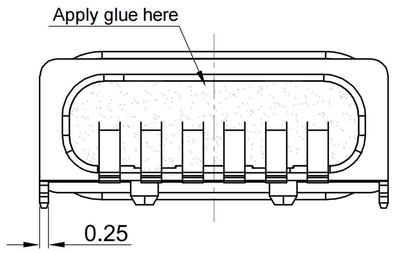

G-Switch USB-C Specification:

1.Current rated:3A on Vbus/1.25A
on Vconn/0.25A on other
Voltage rating:5V AC
2.Withstanding voltage:100V AC/minute
3. Contact Resistance: 40mΩ Max
4. Insulation Resistance: 100MΩ Min
5. Operating temperature: -40 °C ~ +85 °C
6. Mating force : 5N~20N
7.Unmating force: 8N~20N
8. Durability Cycle:10,000 Cycle

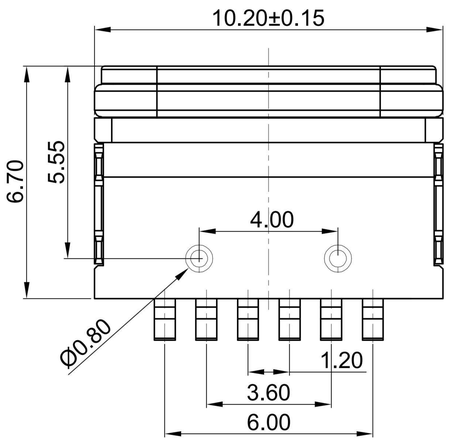

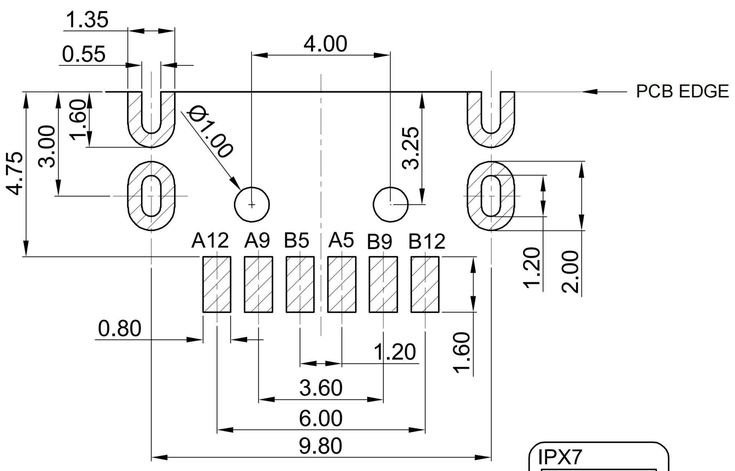

PCB Layout For Reference Only

A1	A2	A3	A4	A5	A6	A7	A8	A9	A10	A11	A12
				CC1				VBUS			GND
				Second				First			First

B12	B11	B10	B9	B8	B7	B6	B5	B4	B3	B2	B1
GND			VBUS				CC2				
First			First				Second				

NO.	PARTS	MATERIAL	REMARKS
1	SHELL	STAINLESS STEEL	NI PLATED
2	MID PLATE	STAINLESS STEEL	——
3	HOUSING	HIGH TEMPERATURE PLASTIC	LCP BLACK UL 94 V-0
4	HOUSING	HIGH TEMPERATURE PLASTIC	PA46 BLACK UL 94 V-0
5	TERMINALS	COPPER ALLOY	Au3u" Plating On Contact Area Ni and Matte Tin On Solder Area
6	WATERPROOF RING	SILICA GEL	RED

IPX7
1m/30min Soak

Pb Process Capable

RoHS Compliant 2002/95/EC

HALOGEN Compliant Halogen Free

SCALE: 4:1	UNIT: mm	Title:	Horizontal Type-c 6P Female SMT CH=1.65 L=6.7mm		
SIZE: A4		Molde Code:	GT-USB-7041B		
Unless otherwise General Tolerance: X. ±0.20 X.x ±0.15 X.xx ±0.10 X.xxx ±0.05 Angles ±3°		DRAWN: Xia	CHECKED: Chen	APPROVED: Chen	DATE: 2022.12.08
		REV: A0	SHEET: 1/1		

品赞科技 G-Switch ®

X-ON Electronics

Largest Supplier of Electrical and Electronic Components

Click to view similar products for USB Connectors ***category:***

Click to view products by G-Switch ***manufacturer:***

Other Similar products are found below :

950 A-USB A-LP-SMT-C A-USB B-TOP-C MUSBD11135 17-200721 217450-1 KMBVX-TH-5S-B30 KUSBX-AS2N-W KUSBX-SMT2AP1S-W30 935 957 30-498-6 SK-60A-2 1734082-1 30-470 30-489 30-541 MAB 5 S A-USB A-2P-C MIKROE-1451 USBFTVSCCG 1-1734084-2 MUSBA81130 NK-27-32SL NK-L8-22C-5/8 10135326-001LF 4198 690-024-633-031 UB-20PMFP-LC7001 17-200011 UB-20AFMM-LL7A01 CAP-WCCMLPB1 CAP-WCCMLPC1 2274475-3 914-614A2025S10200 USB3FTV7SAGF059 USB3FTV2SAZNF459 USB3FTV7SAZNF459 HYCW153-USBD05-500B HYCW148-USBD05-117B HYCW149-USBD05-740B HYCW214-USBA04-113B HYCW213-USBA04-113B KMMX-BSMT35S-1-B30TR 2345986-1 10082141-N340LF 10117836-011LF GSB3C3133DSYHR GT-USB-2014-CWG1 GT-USB-7010ANS