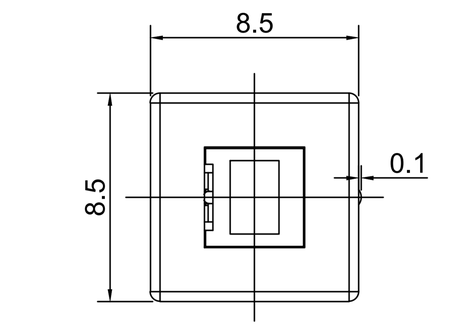

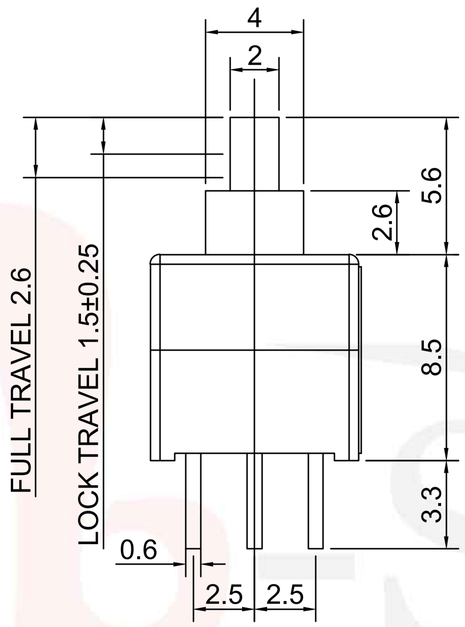

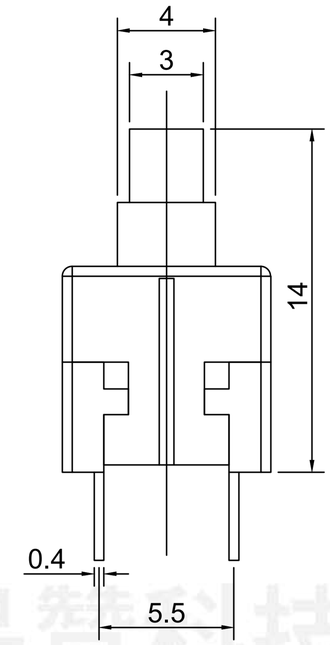

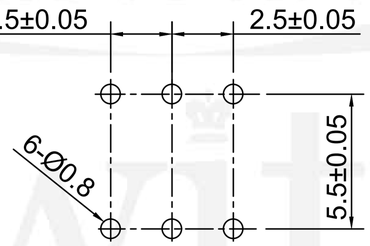

P.C.B LAYOUT

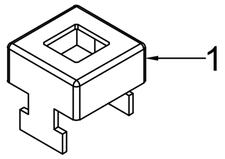

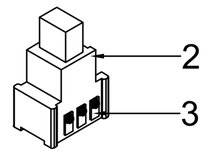

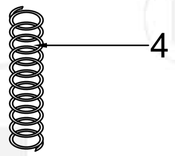

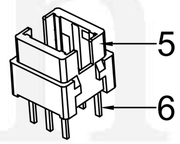

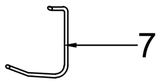

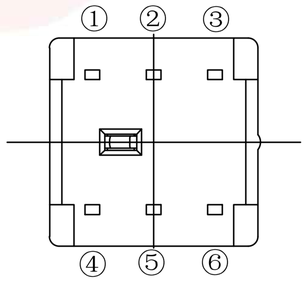

PUSH

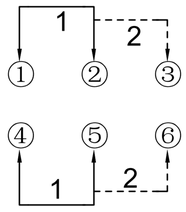

PUSH-ON:
2-3,5-6 Conduction

PUSH-OFF
1-2,4-5 Conduction

PUSH

SCHEMATIC

PS-8556DVX-6PL

PUSH SWITCH

Switch Type
85=8.5×8.5mm

Foot Type
D=Dip

Switch Height
56=5.6mm

Type
V=Vertical

Operating Force
A=180gf
B=250gf

Foot Position
6P=6pin

Switch Function
L=Lock
N=No Lock

G-Switch Specification:
Operating temperature range：-40℃to+85℃
Rating：0.5A.24V DC
Insulation resistance:：100MΩ min.100V DC
Dielectric strength： 250V AC for 1 min
Contact resistance:：100m Ω max.
Switch lifetime：30,000Cycles

NO.	PART NAME	MATERIAL	QTY	FINISHING
8				
7	TERMINAL	BRASS	6	Ag PLATED
6	CASE	PPA	1	BLACK
5	LOCK PIN	SUS WIRE	1	NATURAL
4	SPRING	SUS WIRE	1	NATURAL
3	CONTACT	BRONZE	2	Ag PLATED
2	KNOB	PPA	1	WHITE
1	COVER	PPA	1	BLACK

Pb Process Capable

RoHS Compliant 2002/95/EC

HALOGEN Compliant Halogen Free

品赞科技 G-Switch ®

G-Switch Electronic (HongKong) CO.,Ltd.

Unless otherwise specified, Tolerance:

X.	±0.30
X.x	±0.20
X.xx	±0.15
X.xxx	±0.10
Angles	±3°

DESIGN Feng²	DATE 2022.08.12	Molde code: PS-8556DVX-6PL	
CHECKED	DATE		
APPROVED	DATE		
http://www.dg-switch.com	REV.: X1	SCALE: 4:1	UNIT: mm
TEL:0769-82388879	SIZE: A4	SHEET: 1/1	

X-ON Electronics

Largest Supplier of Electrical and Electronic Components

Click to view similar products for Pushbutton Switches ***category:***

Click to view products by G-Switch ***manufacturer:***

Other Similar products are found below :

8971K1133 LW2L-M1C20M-A M22-D-R-GB0/K11 67021K512 701PB580 7199K101 810K12910 810KSV30B FLT 2U EE 01A MML21EA2ADK MML21KA3ABK MML23KA3AC05K-001 MML23KW3AA01W 8418K2 8442K3 8450K1 860K11911T01A 861901 861K11911T01A07 861K13810T00A14 861K13911 8646AB6X718UL 9533CD4+U574+U4922 99-450.837 99-453.837 A2PMA1X03EC56 A3A-7310 A3A-7340 12037A2ULCSA 1203A2UL ABGW410-R 1211390004 ABN400-R 121382 1213C3 HE3B-M2 1211500044 121194 1212MRA 1232A6NF 1241.1183.7047 121489 1223A2ULCSA 1241.1183.8000 1241.1183.8029 D5P-MT4 13435AG 13445AD29GX768 AG23-L2 AH165-2SGLG1TE3