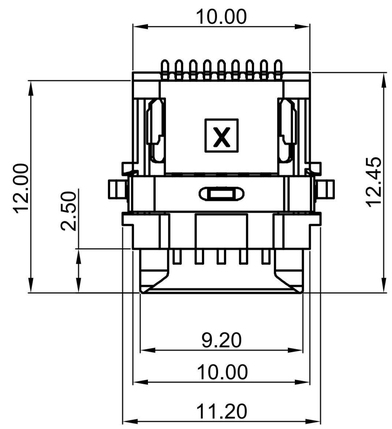

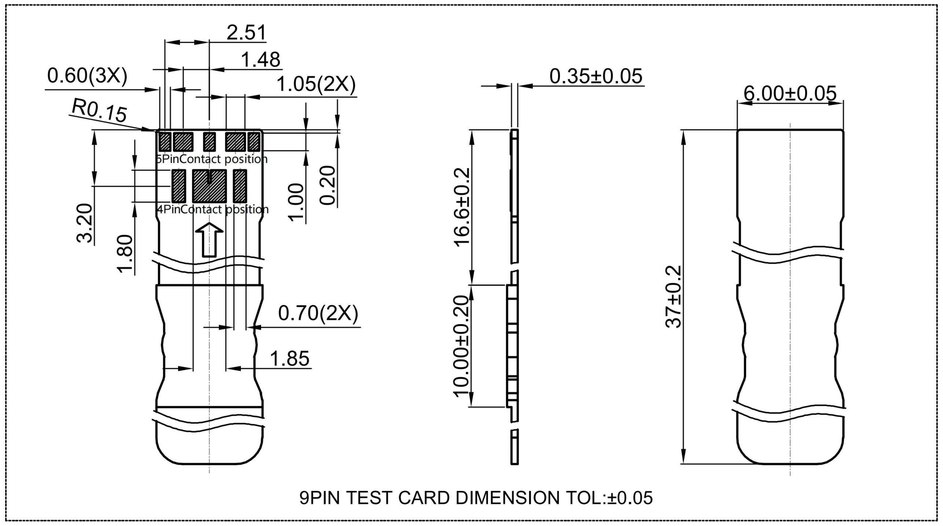

9PIN TEST CARD DIMENSION TOL:±0.05

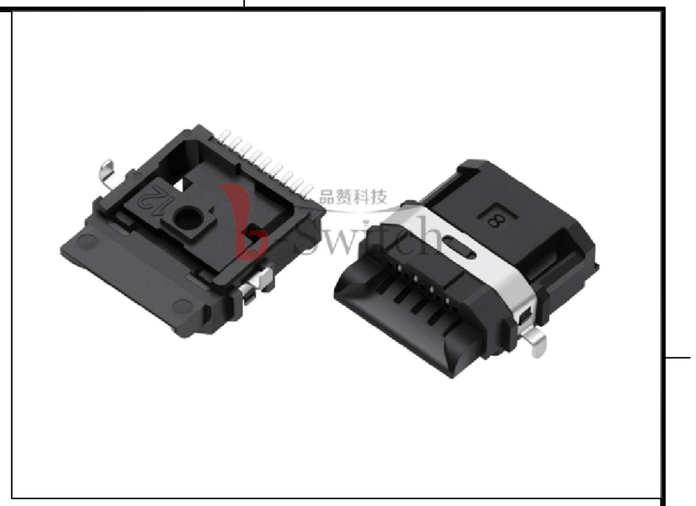

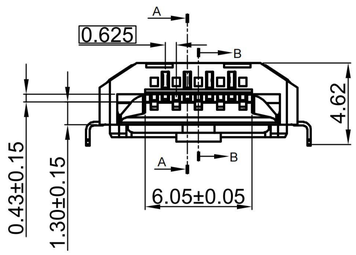

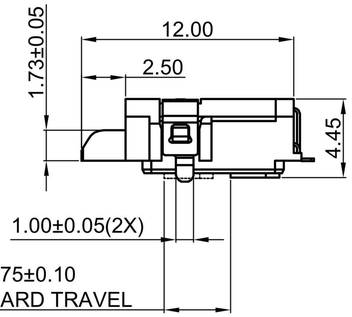

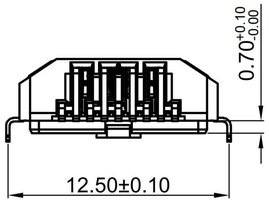

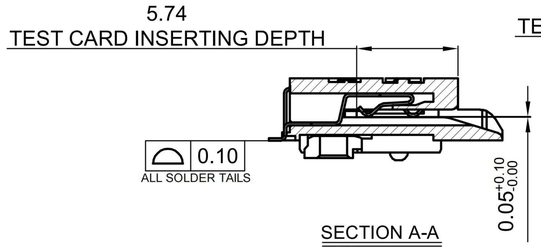

SECTION A-A
SCALE:1:1

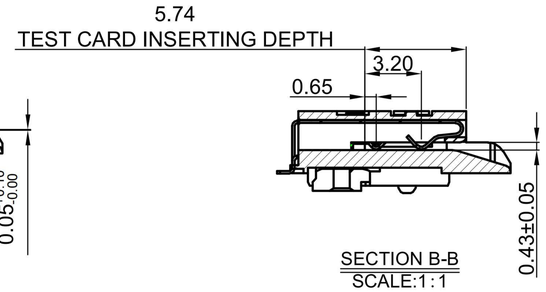

SECTION B-B
SCALE:1:1

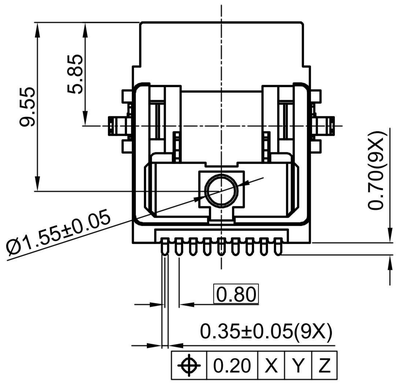

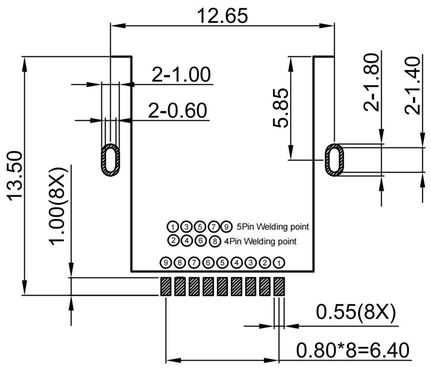

RECOMMENDED PCB LAYOUT
TOLERANCE:±0.05

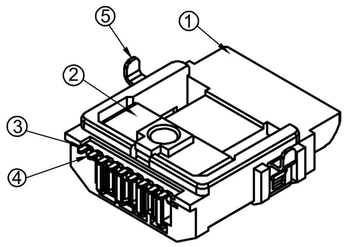

G-Switch Specification:

1. Current rating:0.3A
2. Dielectric withstanding voltage:500 V(AC)
3. Contact Resistance: 50 mΩ Max.
4. Insulation resistance: 500 MΩ Min.
5. Total mating force: 0.20~2.0N.
6. Total unmating force: 0.20~2.0N.
7. Durability Cycle:10,000 Cycles

ITEM	PART NAME	PART NUMBER	Q'TY	MATERIAL	DESCRIPTION
05	CONTACT C	TL-SK0009TC-800	1 PCS	C5191R-H, T=0.20mm	SOLDER: MATTE 100~150" Sn.
04	CONTACT B	TL-SK0009SB-800	5 PCS	C5191R-H, T=0.15mm	CONTACT: G/F Au/SOLDER: MATTE 100~150" Sn.
03	CONTACT A	TL-SK0009SA-800	4 PCS	C5191R-H, T=0.15mm	CONTACT: G/F Au/SOLDER: MATTE 100~150" Sn.
02	PLAETIC HANDLE	KN-SK0009-1A0H	1 PCS	PA10T 640 BK003	BLACK, UL94V-HB
01	HOUSING	HS-SK0009-1A0H	1 PCS	PA10T 640 BK003	BLACK, UL94V-HB

Pb Process Capable

RoHS Compliant 2002/95/EC

HALOGEN Compliant Halogen Free

SCALE: 1:1	UNIT: mm	Title: Horizontal Medical Connector Offset Type SMT L=12.0mm	
SIZE: A4			
Unless otherwise General Tolerance: X. ±0.30; X.x ±0.20; X.xx ±0.15; X.xxx ±0.10; Angles ±3°		Molde Code: SK-0009S00-111-1A2H	
DRAWN: Xia	CHECKED: Chen	APPROVED: Chen	DATE: 2023.02.01
REV: A0	SHEET: 1/1		

品赞科技 b-Switch ®

X-ON Electronics

Largest Supplier of Electrical and Electronic Components

Click to view similar products for Memory Card Connectors ***category:***

Click to view products by G-Switch ***manufacturer:***

Other Similar products are found below :

M21-033321-005 6407-249V-25273P 6407-249V-25343P 6426-201-21343 69.920.0553.0 MCR60A-98D-2.54DSA(70) 809180410000000 DM3AT-SF-PEJM5(41) IC11S-BUR-PNEJL(71) 252-0144-000 2041353-2 308-DS1P0811-192 HM2P09PDR360N9LF 10014744-011TLF 11327-001 11327-002 617230001 NX1-32T-KT3K(05) N7E50-U516RB-50-SIN0005 68-580163-21S 125A-78C00 CCM03-3109 B LFT 2309923-1 61126-050CAHLF IC1GA-68PD-1.27DS-EJ(72) GTFP08432B1HR SCE2MSDZN76A121SN 10014744-011ALF 10014744-011LF 10057542-1211FLF 10067972-000LF 10067972-050LF 10122302-20110LF G85D1162022HHR MUP-C7809-1 NANO SIM 7P H1.37 MICRO SIM 7P H1.35 TF-CARD H1.8 SY MICRO SIM 6P H1.35 TF-CARD H1.8 TF-115Y-BCP9 TF-115YY-ACP9 SMN-309-ARP6 TF-115Y-ACP9 TF-108-ARP10 SMN-303S-ACP7 SNO-14100 SD-112S MUP-C7804-1 KH-TF-07DT