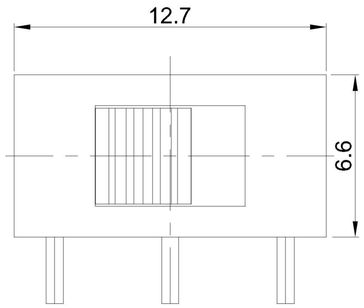


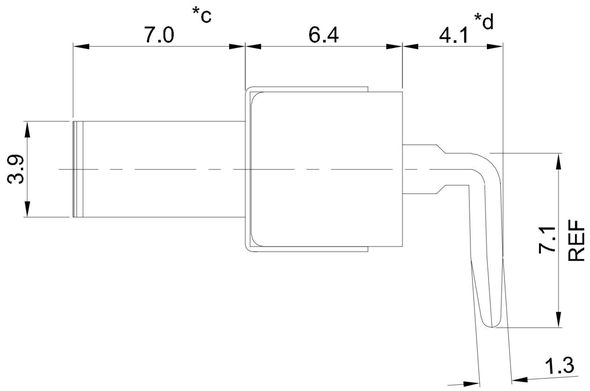


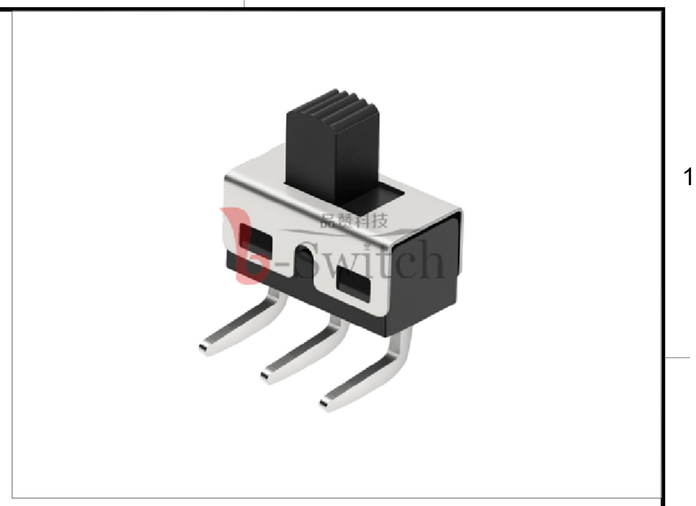

# SS-12D06-G070

**Vertical**

**G-Switch P/N**

**Switch Height** (mm)
G020=2.0mm G030=3.0mm
G040=4.0mm G050=5.0mm
G060=6.0mm G070=3.0mm
G080=8.0mm G090=9.0mm
G100=10.0mm

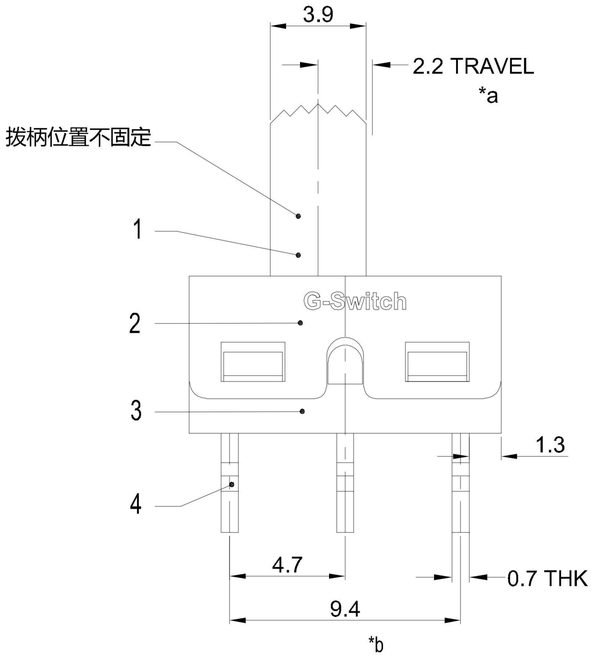


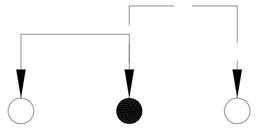

SCHEMATIC(NON-SHORTING)

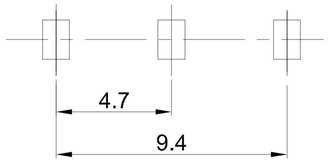


RECOMMENDED PCB LAYOUT
TOLERANCE:±0.05

**G-Switch Specification:**

1.Operating temperature range: -40°C ~ +85°C
2.Rating: 3.0A.250V DC
3.Insulation resistance: 100MΩ min.100V DC
4.Dielectric strength: 250V AC for 1 min
5.Contact resistance: 100m Ω max.
6.Terminals arrangement: 1P2T
7.Travel: 2.2±0.1mm
8.Switch lifetime: 10,000Cycles

| NO. | PARTS | MATERIALS | Q'TY | FINISH |
|---|---|---|---|---|
| 7 | STEEL BALL | STEEL | 1 | NATURAL |
| 6 | SPRING | STEEL WIRE | 1 | NATURAL |
| 5 | CONTACT | BRASS STRIP | 1 | Ag PLATED |
| 4 | TERMINAL | BRASS STRIP | 3 | Ag PLATED |
| 3 | CASE | PA66 | 1 | BLACK |
| 2 | COVER | SUS | 1 | NATURAL |
| 1 | KNOB | PA66 | 1 | BLACK |

Pb Process Capable

RoHS Compliant EU RoHS Standards

HALOGEN Compliant Halogen Free

| | | | |
|---|---|---|---|
| SCALE: 1:1 | UNIT: mm | Title: | Horizontal Slide Switch DIP12.7×6.6×6.4mm |
| SIZE: A4 | | | |
| Unless otherwise General Tolerance: | | Molde Code: | SK-12D06-G070 |

| | |
|---|---|
| X | ±0.40 |
| X.x | ±0.30 |
| X.xx | ±0.20 |
| X° | ±5° |
| X.x° | ±3° |

| DRAWN | CHECKED | APPROVED | DATE |
|---|---|---|---|
| Xia | Chen | Chen | 2023.02.01 |

品赞科技 G-Switch ®
www.dg-switch.com

REV: A0 SHEET: 1/1

# X-ON Electronics

Largest Supplier of Electrical and Electronic Components

***Click to view similar products for*** Slide Switches ***category:***

***Click to view products by*** G-Switch ***manufacturer:***

Other Similar products are found below :

6-1437581-1 M43R MHS123K15D MHS133K MMD MSS12A 1825074-1 1825160-3 1825167-2 1825289-7 K232CB 25139NLDB 25449NAH SLB1240R45 1825078-1 1825080-4 1825269-1 1825270-2 STS141RA04 T2215BEN506 GH46P000001 GH49P010001 25339NA 25436NLDH M42A AYZ0202AG L203091MS02Q 4-1437581-7 48BFSP3M2QT 1101M1S3ZB8E2 1-1437581-1 EG1218REDACTUATOR MSS2225G04 MSS42G T105S1CWZBE SLB124145 SLB1280R5 TG39W000050 25149NAH 25439NAH 25436NAH6 TG36Y000050 SL-1211C1B8 46204LRX 1977143-4 1977144-4 HASS0194 JS0001 SSJ12R04 GR5-1323-0800