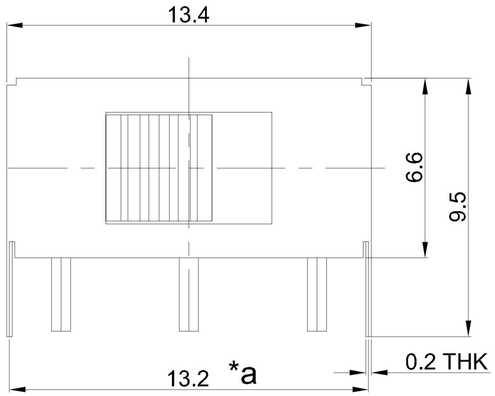

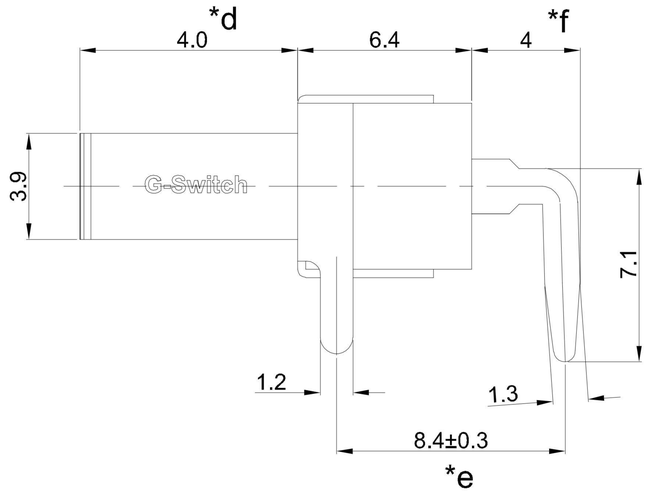

SS-12D11-G040

Straight shank

G-Switch P/N

Switch Height (mm)
G020=2.0mm G030=3.0mm
G040=4.0mm G050=5.0mm
G060=6.0mm G070=3.0mm
G080=8.0mm G090=9.0mm
G100=10.0mm

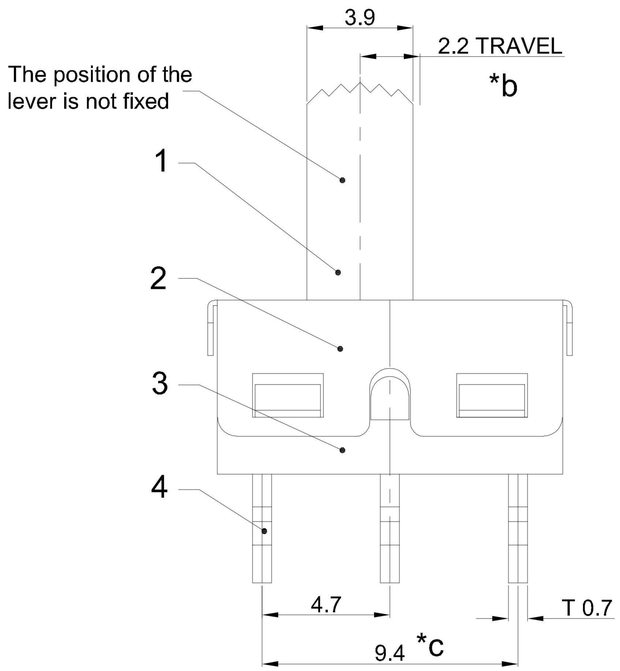

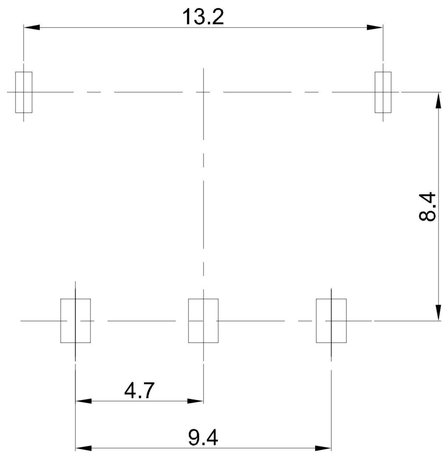

RECOMMENDED PCB LAYOUT
TOLERANCE:±0.05

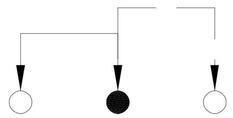

CIRCUIT DIAGRAM

G-Switch Specification:

1.Operating temperature range: -40°C ~ +85°C
2.Rating: 3A.50V AC
3.Insulation resistance: 100MΩ min.100V DC
4.Dielectric strength: 500V AC for 1 min
5.Contact resistance: 30mΩ max.
6.Terminals arrangement: 1P2T
7.Travel: 2.2±0.1mm
8.Switch lifetime: 10,000 Cycles
9.Operating force: 250±100gf

NO.	PART NAME	MATERIAL	REMARK
6	STEEL BALL	STEEL	NATURAL
6	SPRING	STEEL WIRE	NATURAL
5	CONTACT	BRASS STRIP	Ag PLATED
4	TERMINAL	BRASS STRIP	Ag PLATED
3	CASE	PA9T	BLACK
2	COVER	SUS	NATURAL
1	KNOB	PA9T	BLACK

Note: "*" represents the critical size (6 pieces)

Pb Process Capable

RoHS Compliant EU RoHS Standards

HALOGEN Compliant Halogen Free

SCALE: 1:1	UNIT: mm	Title:	Horizontal Slide Switch DIP 13.4×6.6×6.4mm
SIZE: A4			
Unless otherwise General Tolerance:		Molde Code:	SS-12D11-G040
>1.5 ±0.20			
<1.5 ±0.10			
X° ±5°			

DRAWN	CHECKED	APPROVED	DATE
Xia	Chen	Chen	2023.02.01

REV: A0 SHEET: 1/1

品赞科技 b-Switch ® www.dg-switch.com

X-ON Electronics

Largest Supplier of Electrical and Electronic Components

Click to view similar products for Slide Switches ***category:***

Click to view products by G-Switch ***manufacturer:***

Other Similar products are found below :

6-1437581-1 M43R MHS123K15D MHS133K MMD MSS12A 1825074-1 1825160-3 1825167-2 1825289-7 K232CB 25139NLDB 25449NAH SLB1240R45 1825078-1 1825080-4 1825269-1 1825270-2 STS141RA04 T2215BEN506 GH46P000001 GH49P010001 25339NA 25436NLDH M42A AYZ0202AG L203091MS02Q 4-1437581-7 48BFSP3M2QT 1101M1S3ZB8E2 1-1437581-1 EG1218REDACTUATOR MSS2225G04 MSS42G T105S1CWZBE SLB124145 SLB1280R5 TG39W000050 25149NAH 25439NAH 25436NAH6 TG36Y000050 SL-1211C1B8 46204LRX 1977143-4 1977144-4 HASS0194 JS0001 SSJ12R04 GR5-1323-0800