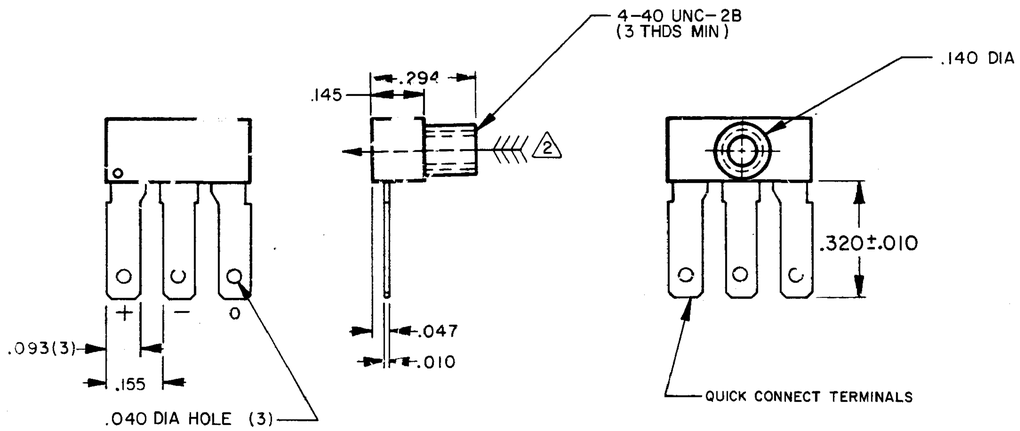

MAGNETIC CHARACTERISTICS (2)(3)(5)

TEMP RANGE	-40°C TO 150°C	-40°C TO 100°C	0°C TO 70°C	ISSUE NUMBER	RELEASE NUMBER	CATALOG LISTING
OPERATE MAX	340	330	320	4	PR-3859	512SS16
RELEASE MIN	30	85	105			
DIFF MIN	23	23	23			
OPERATE MAX						
RELEASE MIN						
DIFF MIN						
OPERATE MAX						
RELEASE MIN						
DIFF MIN						

NOTES

(1) CATALOG LISTING AND LOT NUMBER WILL BE STAMPED ON THE PACKAGE

(2) TO ACTUATE THE DEVICE THE SOUTH POLE OF THE MAGNET OR MAGNETIC FLUX GENERATOR MUST BE PRESENTED TO THE CENTER OF THE FRONT SURFACE OF THE DEVICE. (THIS ASSUMES THE CONVENTION THAT THE DIRECTION OF THE EXTERNAL FLUX OF A MAGNET IS FROM THE NORTH TO THE SOUTH POLE OF THE MAGNET)

(3) THE MAGNETIC FIELD STRENGTH (GAUSS) REQUIRED TO CAUSE THE SWITCH TO CHANGE STATE (OPERATE AND RELEASE) WILL BE AS SPECIFIED IN THE OPERATING CHARACTERISTICS. TO TEST SWITCH AGAINST THE SPECIFIED OPERATING CHARACTERISTICS, THE SWITCH MUST BE PLACED IN A UNIFORM MAGNETIC FIELD

(4) V_S IS THE UNREGULATED SUPPLY VOLTAGE

(5) AT SUPPLY VOLTAGE OF 6 TO 16 VDC AND OVER THE TEMPERATURE RANGE SPECIFIED

(6) AT 24°C ± 2°C

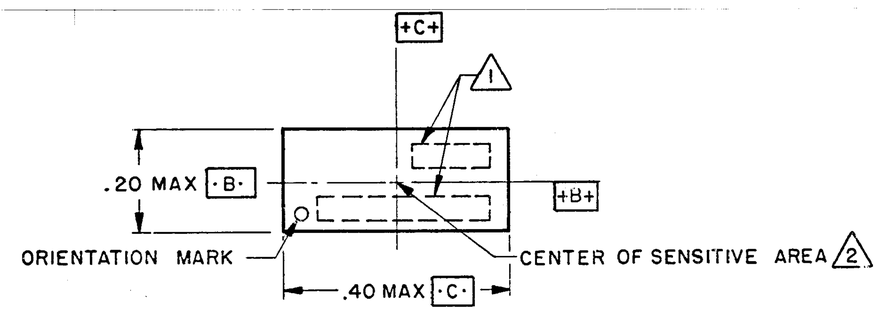

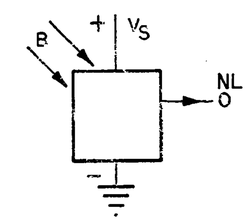

SWITCH SYMBOL

ABSOLUTE MAXIMUM RATING

SUPPLY VOLTAGE (V_S) (4)	-1.2 TO 20 VOLTS DC
VOLTAGE EXTERNALLY APPLIED TO OUTPUT	+6.5 VDC MAX WITH SWITCH IN "OFF" CONDITION (Vs + 4) VDC MAX WITH SWITCH IN "ON" CONDITION
LOAD ON OUTPUT (CONTINUOUS)	40 MA
TEMPERATURE	-40°C TO +150°C
MAGNETIC FLUX	NO LIMIT, THE CIRCUIT CANNOT BE DAMAGED BY MAGNETIC OVERDRIVE

ELECTRICAL CHARACTERISTICS

	MIN	TYP	MAX	REMARKS
SUPPLY CURRENT (6)		3 mA 5 mA	6.5 mA 10 mA	PLUS LOAD CURRENT Vs = 6 VOLTS Vs = 16 VOLTS (4)
OUTPUT VOLTAGE (5) (OPERATED)	(Vs-2) VOLTS	(Vs-1.5) VOLTS		SOURCING 20 MA MAX (4)
OUTPUT LEAKAGE CURRENT (5) (RELEASED)			20 μA	LEAKAGE FROM SWITCH OUTPUT
OUTPUT SWITCHING TIME (SOURCING 20 MA) (5)				
RISE TIME		0.1 μs	0.5 μs	10% TO 90%
FALL TIME		0.5 μs	2.0 μs	90% TO 10%

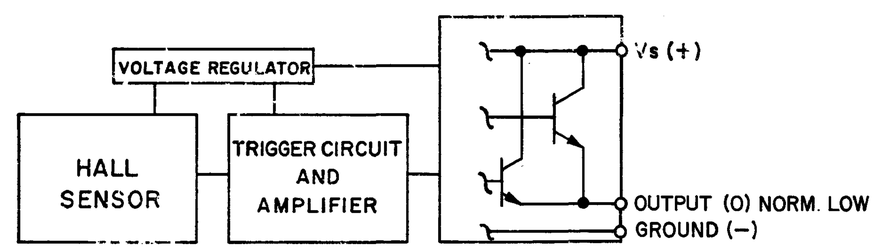

BLOCK DIAGRAM SHOWING CURRENT SOURCING OUTPUT

512SS SERIES CHART I

DRAWING NUMBER M

RELEASE NO. PR-3859

REPLACES

ISSUE 4

REVISIONS

A	CO-33787	J A L 10 JUNE 74	
B	C034942	R E R 13 FEB 75	
C	C035566	D B W 18 JUL 75	
D	C038223	J A L 3 MAR 77	
E	C048802	T S M 26 DEC 80	

CHECK 74 13 JUNE

CHECK DJW

CHECK 74 10 JUNE

DRAWN J A L

TO-52863

THIS DRAWING COVERS A PROPRIETARY ITEM AND IS THE PROPERTY OF MICRO SWITCH, A DIVISION OF HONEYWELL. THIS DRAWING IS NOT TO BE COPIED OR USED WITHOUT THE APPROVAL OF MICRO SWITCH.

MICRO SWITCH
FREEPORT ILLINOIS, U S A
A DIVISION OF HONEYWELL
FED. MFG. CODE 81889

SOLID STATE SWITCH
MAGNETICALLY OPERATED

CATALOG LISTING
512SS SERIES
CHART I

SCALE 3 TO 1
DO NOT SCALE PRINT

UNLESS OTHERWISE NOTED
DIMENSIONS ARE IN INCHES
TOLERANCES ARE:
ONE PLACE (.0) ±.030
TWO PLACE (.00) ±.015
THREE PLACE (.000) ±.005
ANGLES ±.5°

WEIGHT

X-ON Electronics

Largest Supplier of Electrical and Electronic Components

Click to view similar products for Board Mount Hall Effect/Magnetic Sensors ***category:***

Click to view products by Honeywell ***manufacturer:***

Other Similar products are found below :

HGPRDT005A AH277AZ4-AG1 AV-10448 SS41C AH1894-Z-7 TLE4917 TLE4946-1L 50017859-003 TY-13101 TLE4976L A1308KUA-1-T SS85CA BU52002GUL-E2 BU52003GUL-E2 AH277AZ4-BG1 TLE49614MXTSA1 AH3376-P-B AH3382-P-B AH3377-P-B AH211Z4-AG1 AH3360-FT4-7 TLE4941-1 SS460S-100SAMPLE AH374-P-A TLE49595UFXHALA1 SS460P-T2 AH1913-W-7 AH3373-P-B TLE9852QXXUMA1 MA732GQ-Z MA330GQ-Z TLE49421CHAMA2 AH1903-FA-EVM AH8502-FDC-EVM TLE4998S3XALA1 TLE5011FUMA1 TLE5027CE6747HAMA1 TLE5109A16E1210XUMA1 TLI4966GHTSA1 TLI4906KHTSA1 MA710GQ-P S-57K1NBL2A-M3T2U S-57P1NBL9S-M3T4U S-576ZNL2B-L3T2U S-576ZNL2B-A6T8U S-57P1NBL0S-M3T4U S-57A1NSL1A-M3T2U S-57K1RBL1A-M3T2U S-57P1NBH9S-M3T4U S-57P1NBH0S-M3T4U