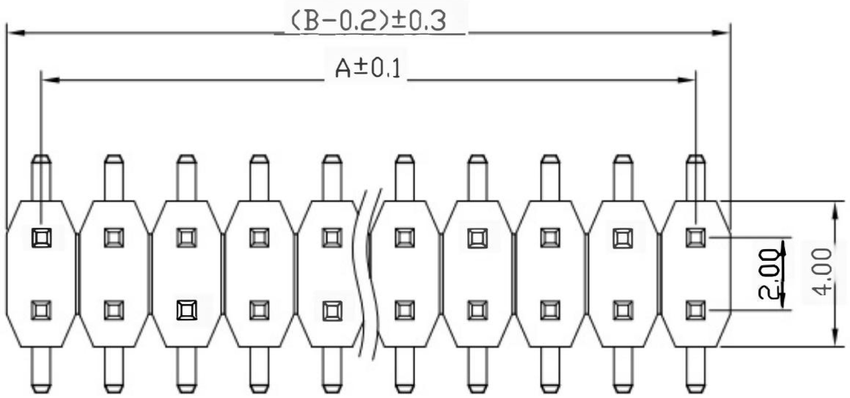

SPECIFICATIONS

Current Rating: 1.5 Amps
Insulation Resistance: 1000MΩ Min
Contact Resistance: 20mΩ Max
Withstanding Voltage: AC 500V
Operation Temperature: -40° to+105°
Contact Material: Brass
Standard: PA6T
Insrlator Material: Polyester
Contact Plating: Gold Flash
Max.Processing Temp: 240° C for30-60seconds
(260° C for5seconds)

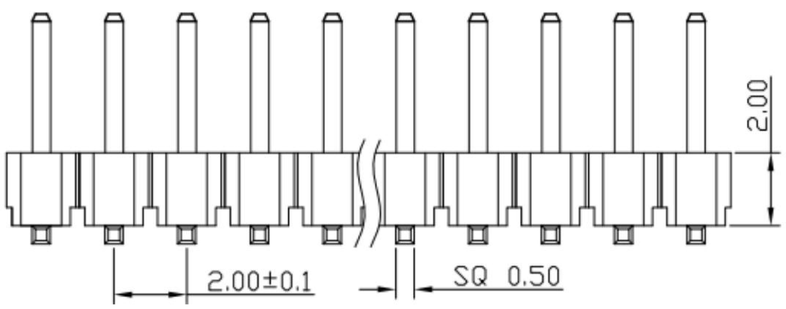

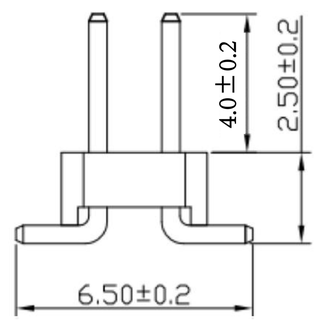

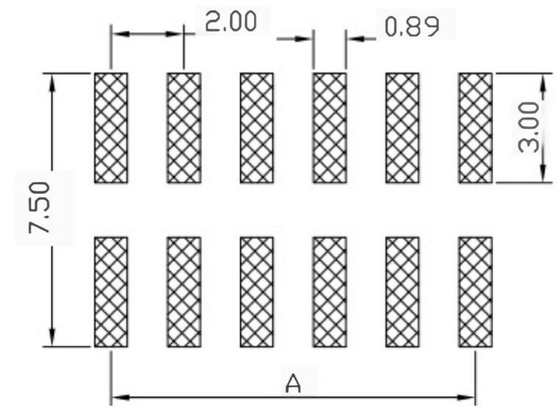

RECOMMEND P.C.B LAYOUT
PCB TOLERANCE: ±0.05 (TOP VIEW)

深圳市虹成电子有限公司

No. of	DIM. A	DIM. B	No. of	DIM. A	DIM. B	No. of	DIM. A	DIM. B	No. of	DIM. A	DIM. B
1	0.00	2.00	11	20.00	22.00	21	40.00	42.00	31	60.00	62.00
2	2.00	4.00	12	22.00	24.00	22	42.00	44.00	32	62.00	64.00
3	4.00	6.00	13	24.00	26.00	23	44.00	46.00	33	64.00	66.00
4	6.00	8.00	14	26.00	28.00	24	46.00	48.00	34	66.00	68.00
5	8.00	10.00	15	28.00	30.00	25	48.00	50.00	35	68.00	70.00
6	10.00	12.00	16	30.00	32.00	26	50.00	52.00	36	70.00	72.00
7	12.00	14.00	17	32.00	34.00	27	52.00	54.00	37	72.00	74.00
8	14.00	16.00	18	34.00	36.00	28	54.00	56.00	38	74.00	76.00
9	16.00	18.00	19	36.00	38.00	29	56.00	58.00	39	76.00	78.00
10	18.00	20.00	20	38.00	40.00	30	58.00	60.00	40	78.00	80.00

UNLESS OTHEWIXE SPECIFIED TOLERANCE
X :±0.30 X° :±5°
X.X :±0.25 X.X° :±1°
X.XX:±0.20 X.XX° :±0.5°

CHECKED: 陈超凡 2022/04/24

DRAWM NAME: 排针2.0PH H2.0 2xNPin SMT PC6.5 PA4.0 PB2.5 L8.2 6T

SIZE	A4	SCALE	N:1	PROUCT NO.	HC-PZ200-8.2L-2x10PS
REV	A	UNIT	mm	PROJECT	PAGE 1/1

CHECKED: / / APPROVED: / /

X-ON Electronics

Largest Supplier of Electrical and Electronic Components

Click to view similar products for Headers & Wire Housings ***category:***

Click to view products by Hong Cheng ***manufacturer:***

Other Similar products are found below :

0015917161 0022155065 57102-F02-18ULF 58102-G61-06LF 582553-1 01.001.5753.1 0050291907 02.125.8002.8 609-3404 61062-3 CSU011177004 622-0430 622-3653LF 63453-116 636-1030 636-1427 636-3427 636-4007 641938-9 65495-038 65692-001LF 65781-018 65781-047 65817-010LF 65817-015LF 67095-007LF 67601157 68631-112 68645-018 699319-000 70.362.1628.0 70-4210 70-4226B 70-4853B 71.350.2428.0 733-134 733-162 760-3052 MHR-64-VUAL 80.063.4001.1 800-90-001-10-001000 801-43-002-10-013000 801-43-006-10-002000 803-43-024-10-001000 803-93-012-10-001000 8-1437020-4 819-22-004-30-001101 820-22-006-30-001101 820-22-008-30-001101 821-22-002-10-001101