RoHS 2.0

REV.	ECN NO.	DESCRIPTION	DATE	DESIGN
A0.	/.	正式版发行	21.12.21	Yang
		HD	22.06.08	LZR

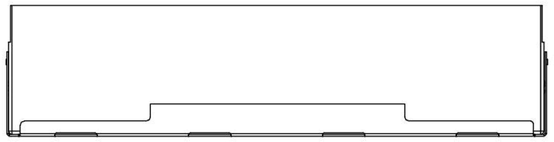

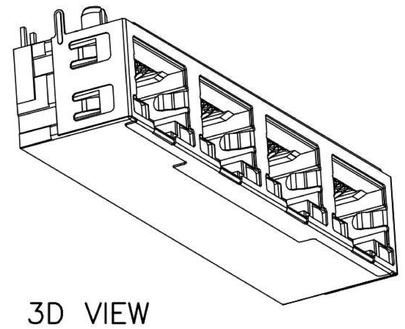

3D VIEW

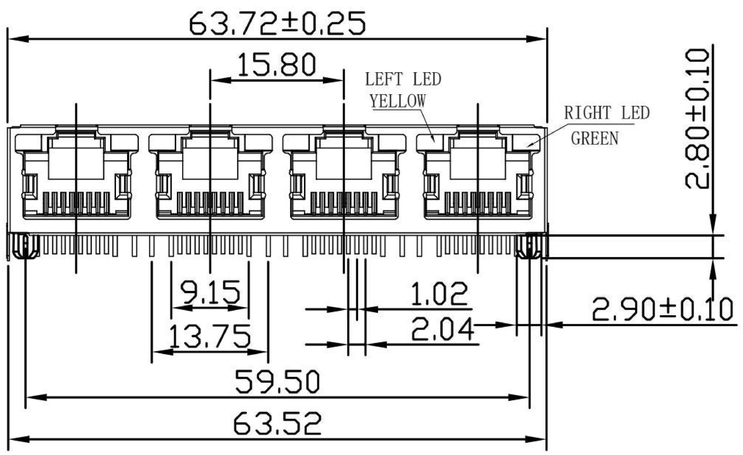

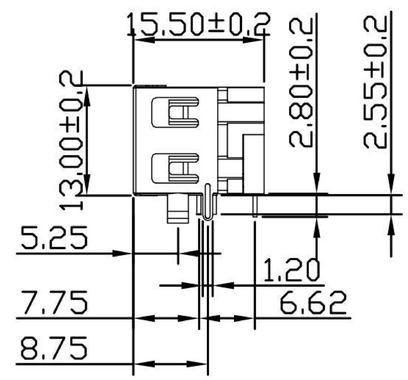

NOTES:
1. MATERIAL:
   1.1. HOUSING: PBT ,COLOR IS BLACK;
   1.2. CONTACT: PHOSPHOR BRONZE,ø0.46±0.02mm;
   1.3. SHELL: Stainless steel material
2. FINISH:
   2.1. CONTACT: PLATED GOLD OVER NI;
   2.2. SHELL: PLATED OVER NI;
3. RECINNEBDED PCB THICKNESS: 1.0mm Min;
4. ELECTRICAL:
   4.1. VOLTAGE RATING: 125 VAC RMS;
   4.2. CURRENT RATING: 1.5 AMP;
   4.3. CONTACT RESISTANCE: 35MILLIOHMS MAX.;
   4.4. WITHSTAND VOLTAGE: 1000 VAC RMS 50(60)Hz,1MIN.;
   4.5. INSULATION RESISTANCE: 1000MEGOHMS MIN @500V DC;
5. MECHANICAL:
   5.1. MATING/UNMATING FORCE: 30N MAX.;
   5.2. RETENTIION STRENGTH: 50N MIN.;
   5.3. OPERATING LIFE: 750 CYCLES MIN.;
6. SALT SPRAY TEST: 12H (Excluding riveted bends);
7. SOLDERABILITY: 245±5°C,5±0.5S;
8. RESISTANCE TO SOLDER: 260±5°C,10±1S;
9 ENVIRONMENTAL:
   9.1. STORAGE TEMPERATURE RANGE:-40°C~+85°C;
   9.2. OPERATION TEMPERATURE RANGE:-25°C~+70°C;

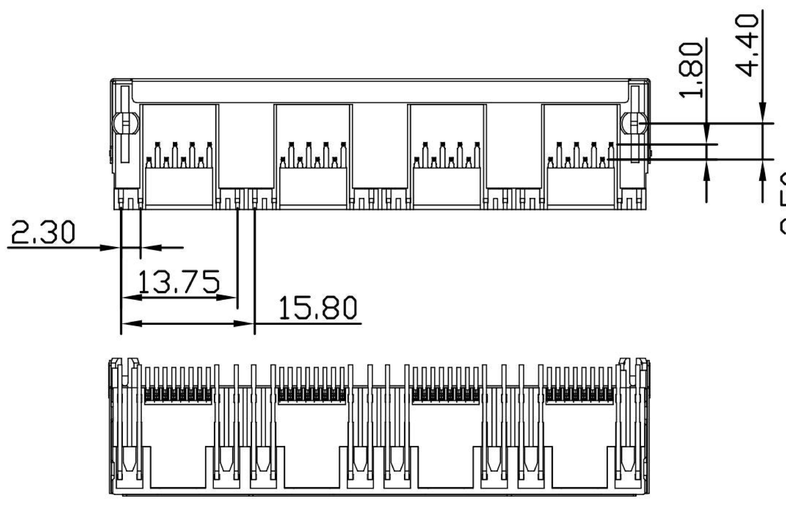

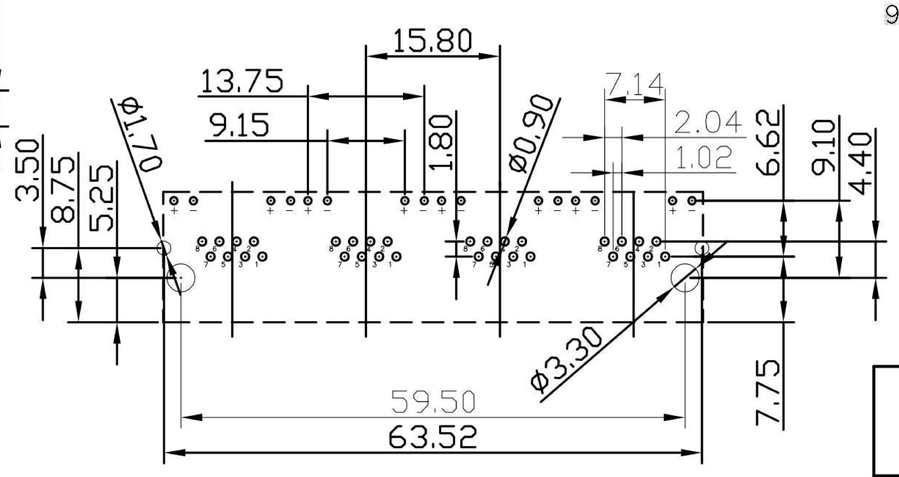

RECOMMENDED PCB LAYOUT
TOP VIEW(TOL:±0.05)

序号	品 名	材 质	电镀/颜色	备 注
C	外壳	不锈钢	镀镍	
B	端子	磷铜	镀镍 镀金(G/F)	
A	基座	PBT	黑 色	

深圳市虹成电子有限公司

UNLESS OTHERWISE, GENERAL TOLERANCE:
±0.10
±0.20
±0.30
ANGULAR:
X.xx° ±1°
X.x° ±3°
X.° ±5°

NAME: RJ45-4口半包带灯

HC-WK88-H16-1X4-DB

THIRD ANGLE PROJECTION

UNIT:	SCALE	SIZE:	SHEET:	REV.
MM	1:1	A4	1/1	A0

DRAWN: Yang
CHECKED: Mr Le
APPROVED: Mr Tang

X-ON Electronics

Largest Supplier of Electrical and Electronic Components

Click to view similar products for Modular Connectors / Ethernet Connectors ***category:***

Click to view products by Hong Cheng ***manufacturer:***

Other Similar products are found below :

8949-H88/06BLKA/SN 74441-0010/BKN PHP-6P6C-5 GAX-3-66 GDCX-PN-66 GLX-A-44 GLX-N-1010M-BLK GLX-S-88M-BLK GMX-SMT4-N-88 GSGX-N-2-88 GSGX-N-4-88 GSX-NS2-88-3.05 GSX-NS-88-3.68 PT-108A-8C-UL PTS-J531-8CS-50UL A-2014-0-4 GWLX-S9-88-YG DC-1021-8-WH-6 1300530003 1324640-4 132764-001 1413235 MPS88RX-5000 E5288-S000K3-L 155302-001 AX101050 AX101063 AX101065 AX101072 AX101307 AX101315 AX101318 AX102271 AX102277 AX102651 AX102660 AX104024 203475 PC4D0018P KIT38082NI 8949-B88/6 2-6609208-5 30-8956 30-8964-100 SM85 SM99S01VBNN04G7 17-103540 191587 PDI-68-RV PHP-8P8C-S-5