BTA/BTB20 Series
20A TRIACs
3 Quadrants
4 Quadrants

ShenZhenHanKingyuan
Electronic CO.,Ltd

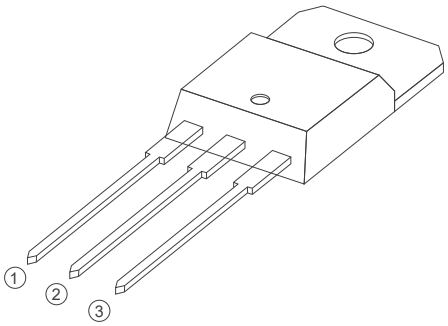

TO-220A Insulated

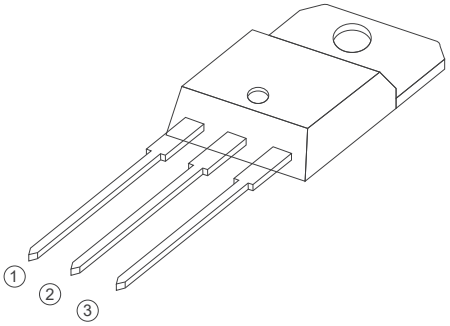

TO-220B Non-Insulated

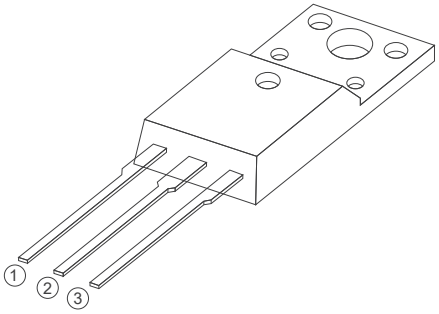

TO-220F Insulated

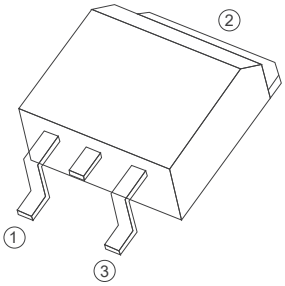

TO-263

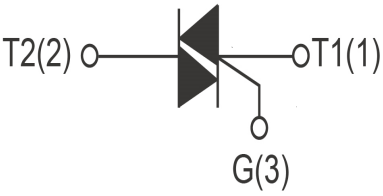

FEATURES

› IT(RMS): 20A › VGT: ≤1.5V › VDRM VRRM:800V~1200V

APPLICATIONS

Washing machine,vacuums, massager,solid state relay， AC Motor speed regulation and so on.

Absolute Maximum Ratings (Tj=25°C unless otherwise specifed)

Symbol	Parameter	Conditions	Ratings	Unit
VDRM VRRM	Repetitive Peak Off-State Voltage	BTA20-800	800	V
		BTA20-1200	1200	V
IT(RMS)	R.M.S On-State Current	Tc=110°C	25	A
ITSM	Surge On-State Current	tp=16.7ms/tp=10ms	280/300	A
I^2t	I^2t for fusing	Tp=10ms	520	A^2s
PG(AV)	Average Gate Power Dissipation	Tj=125°C	1	W
IGM	Peak Gate Current	Tj=125°C	6	A
Tj	Operating Junction Temperature		~40~125	°C
TSTG	Storage Temperature		~40~150	°C

Electrical Characteristics (Tj=25°C unless otherwise specifed)

Symbol	Parameter		Test Conditions	Value				Unit
				SW	CW	BW	B	
IDRM	Repetitive Peak Off-State Current		Tj=25°C	5				uA
			Tj=125°C	3				mA
IRRM	Repetitive Peak Reverse Current		Tj=25°C	5				uA
			Tj=125°C	3				mA
VTM	Forward "on" voltage		IT=35A tp=380us	1.55				V
VGT	Gate trigger voltage		VD=12V ,RL=30Ω	≤1.5				V
di/dt	Critical rate of rise of on-state current	I,II,III	F=120Hz,Tj=125°C IG=2xIGT,tr≤100ns	≥50				A/us
		IV		≥10				A/us
IGT	Gate trigger current	I,II,III	VD=12V RL=30Ω	≤10	≤35	≤50	≤50	mA
		IV			/	/	≤100	mA
IH	Holding current		IT=0.2A	≤40	≤60	≤80	≤80	mA
VDG	Gate non-trigger voltage	ALL	VD=VDRM TJ=125°C	≥0.2				V

FIG1

Maximum power dissipation versus RMS on-state current

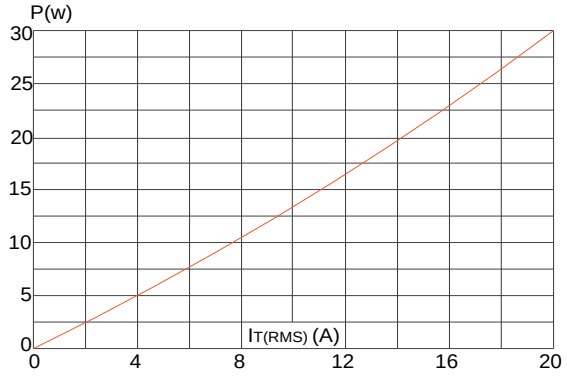

FIG2

RMS on-state current versus case temperature

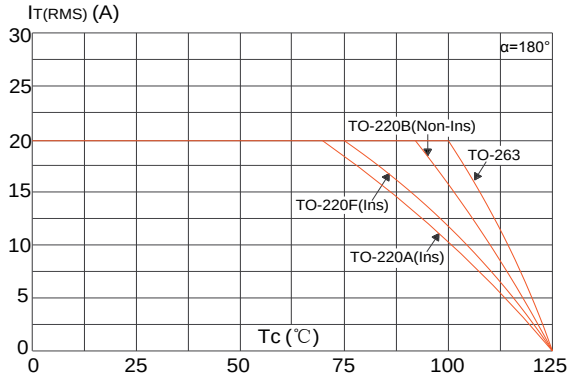

FIG3

Surge peak on-state current versus number of cycles

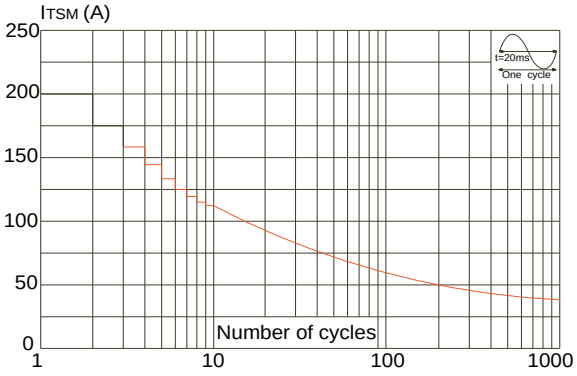

FIG4

On-state characteristics (maximum values)

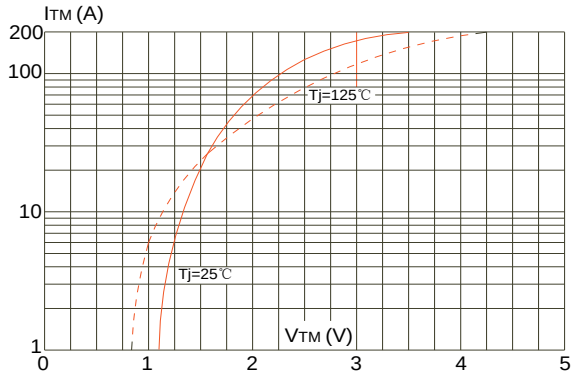

FIG5

Non-repetitive surge peak on-state current for a sinusoidal pulse with width tp<20ms, and corresponging value of I^2t (dI/dt < 100A/μs)

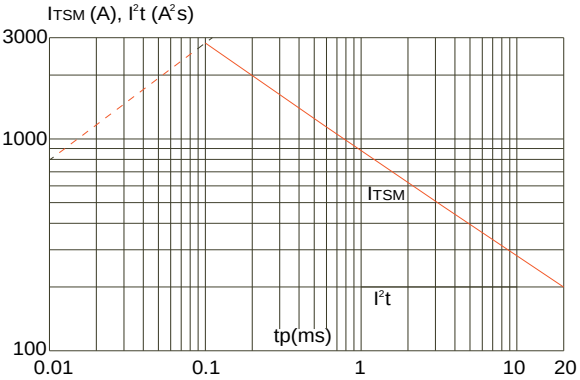

FIG6

FIG.6: Relative variations of gate trigger current, holding current and latching current versus junction temperature

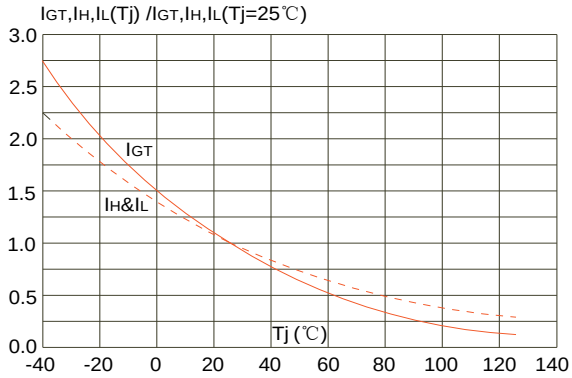

PACKAGE MECHANICAL DATA

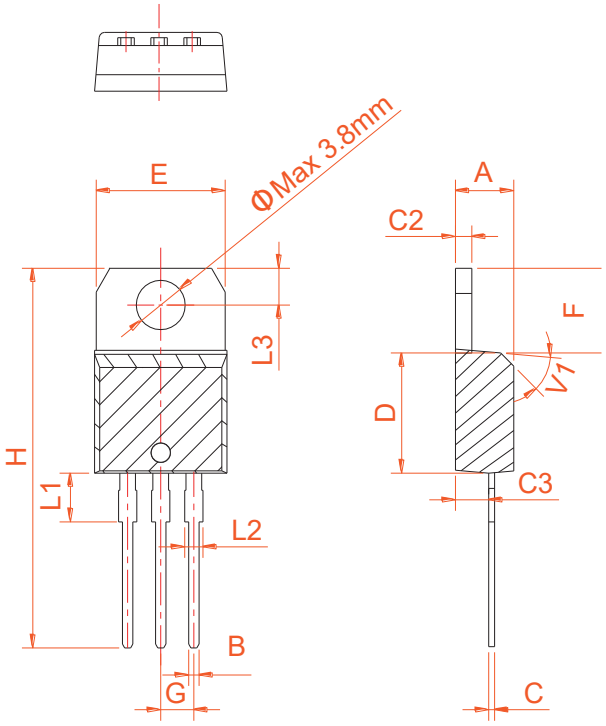

TO-220A Ins

Ref.	Dimensions					
	Millimeters			Inches		
	Min.	Typ.	Max.	Min.	Typ.	Max.
A	4.40		4.60	0.173		0.181
B	0.61		0.88	0.024		0.035
C	0.46		0.70	0.018		0.028
C2	1.21		1.32	0.048		0.052
C3	2.40		2.72	0.094		0.107
D	8.60		9.70	0.339		0.382
E	9.80		10.4	0.386		0.409
F	6.55		6.95	0.258		0.274
G		2.54			0.1	
H	28.0		29.8	1.102		1.173
L1		3.75			0.148	
L2	1.14		1.70	0.045		0.067
L3	2.65		2.95	0.104		0.116
V1		45°			45°	

Ref.	Dimensions					
	Millimeters			Inches		
	Min.	Typ.	Max.	Min.	Typ.	Max.
A	4.40		4.60	0.173		0.181
B	0.61		0.88	0.024		0.035
C	0.46		0.70	0.018		0.028
C2	1.21		1.32	0.048		0.052
C3	2.40		2.72	0.094		0.107
D	8.60		9.70	0.339		0.382
E	9.60		10.4	0.378		0.409
F	6.20		6.60	0.244		0.260
G		2.54			0.1	
H	28.0		29.8	1.102		1.173
L1		3.75			0.148	
L2	1.14		1.70	0.045		0.067
L3	2.65		2.95	0.104		0.116
V1		45°			45°	

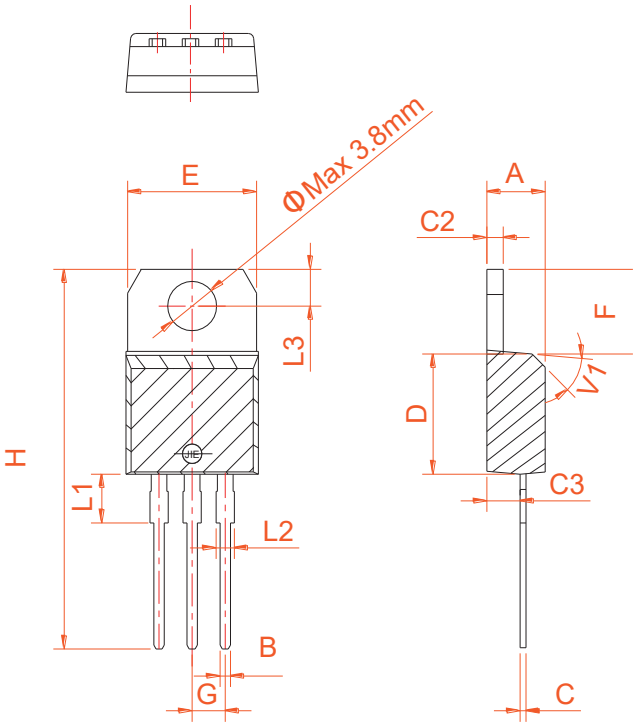

TO-220B Non-Ins

PACKAGE MECHANICAL DATA

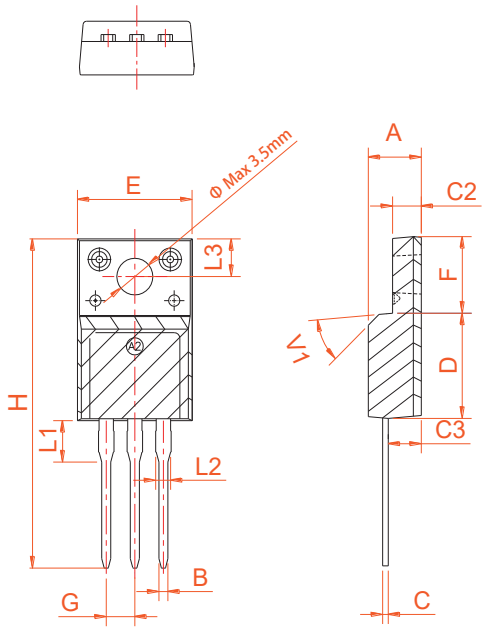

TO-220F Ins

Ref.	Dimensions					
	Millimeters			Inches		
	Min.	Typ.	Max.	Min.	Typ.	Max.
A	4.50		4.90	0.177		0.193
B	0.74	0.80	0.83	0.029	0.031	0.033
C	0.47		0.65	0.019		0.026
C2	2.45		2.75	0.096		0.108
C3	2.60		3.00	0.102		0.118
D	8.80		9.30	0.346		0.366
E	9.80		10.4	0.386		0.410
F	6.40		6.80	0.252		0.268
G		2.54			0.1	
H	28.0		29.8	1.102		1.173
L1		3.63			0.143	
L2	1.14		1.70	0.045		0.067
L3		3.30			0.130	
V1		45°			45°	

Ref.	Dimensions					
	Millimeters			Inches		
	Min.	Typ.	Max.	Min.	Typ.	Max.
A	9.90		10.20	0.390		0.402
B	14.70		15.80	0.579		0.622
C	9.4		9.6	0.37		0.378
D		2.54			0.100	
E	1.20		1.40	0.047		0.055
F	0.75		0.85	0.029		0.033
G			1.75			0.069
H	4.40		4.70	0.173		0.185
J	2.30		2.70	0.091		0.106
K	0.38		0.55	0.015		0.022
L	0	0.10	0.25	0	0.004	0.010
M	1.25		1.35	0.049		0.053

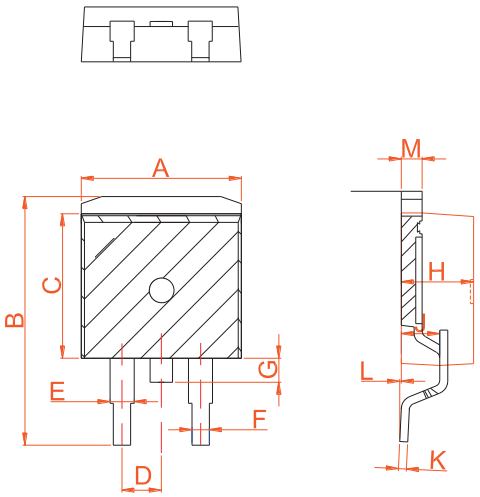

TO-263

ShenZhenHanKingyuan
Electronic CO.,Ltd