麗智電子(昆山)有限公司
LIZ Electronics (Kunshan) Co., Ltd

Approval Specification for Thick Film Chip Resistors - Type *CR*

1. Scope

This specification prescribes lead free thick film chip resistors for use in electronics system

2. Designation

Chip Resistor 0805 1/8W ±5% 4K7Ω

CR0805J80472G

CR	0805	J	8	0472	G

Series Name	Size Code	Tolerance	Power Rating	Value	SPECIAL VALUE
Product..	0201	B=± 0.1%	1= 1W	4digitals	G= reel
CR=Chip	0402	C=± 0.25%	2= 1/2W	49R9=49.9	V= bulk
Resistor	0603	D=± 0.5%	3= 1/3W	0472=4K7	D= special
	0805	F=± 1%	4= 1/4W	0103=10K	requirement
	1206	G=± 2%	8= 1/8W	0564=560K	
	1210	J=± 5%	A= 1/10W		
	2010	K=± 10%	F= 1/16W		
	2512		**H=1/20W**		

2.2 Remark:

(1) Common code for chip resistors

(2) Normal resistance value for tolerance ±0.1% , ±0.25%, ±0.5% ±1% :
the first three digits are significant figures of resistance value and the fourth one denotes the power number of 10, (10^X)

Example: 330 ohm: 3300, 4.7K ohm: 4701
22K ohm: 2202, 100K ohm: 1003

(3) Normal resistance value for tolerance ±2% , ±5%, ±10%:
the first digit is zero, the second and third digit are significant figures of resistance value and the fourth one denotes the power number of 10, (10^X)

Example: 330 ohm: 0331, 4.7K ohm: 0472
22K ohm: 0223, 100K ohm: 0104

(3) EXPLANATION OF PART NUMBER FOR 0603, ±1%

EIA-96 Marking

code	R Value	code	R Value	code	R Value	code	R Value	code	R Value	code	R Value	code	R Value	code	R Value
01	100	13	133	25	178	37	237	49	316	61	422	73	562	85	750
02	102	14	137	26	182	38	243	50	324	62	432	74	576	86	768
03	105	15	140	27	187	39	249	51	332	63	442	75	590	87	787
04	107	16	143	28	191	40	255	52	340	64	453	76	604	88	806
05	110	17	147	29	196	41	261	53	348	65	464	77	619	89	825
06	113	18	150	30	200	42	267	54	357	66	475	78	634	90	845
07	115	19	154	31	205	43	274	55	365	67	487	79	649	91	866
08	118	20	158	32	210	44	280	56	374	68	499	80	665	92	887
09	121	21	162	33	215	45	287	57	383	69	511	81	681	93	909
10	124	22	165	34	221	46	294	58	392	70	523	82	698	94	931
11	127	23	169	35	226	47	301	59	402	71	536	83	715	95	953
12	130	24	174	36	223	48	309	60	412	72	549	84	732	96	976

This table shows the first two digits for the tree-digit EIA-96 part marking scheme the third character is a letter multiplier:

$Y=10^{-2}$, $X=10^{-1}$, $A=10^{0}$, $B=10^{1}$, $C=10^{2}$, $D=10^{3}$, $E=10^{4}$, $F=10^{5}$

(4) If the resistance value is not found in the table for 0603 product, will use normal three digits to show the value, but will add a special mark "- " under the three digits. Example as following:

" 331 " indicates that it is 0603 ±1% 330ohm product.

3. Rating

3.1 Rated Power (%)

Rated power shall be load power corresponding to normal wattage suitable for continuous use at 70℃ ambient temperature in case the ambient temperature exceeds 70℃ reduce the load power in accordance with derating curve shown as

TYPE	Rated Power	Max. Working Voltage	Max. Overload Voltage
CR0201	1/20W	25V	50V
CR0402	1/16W	50V	100V
CR0603	1/10W	50V	100V
CR0805	1/8W	150V	300V
CR1206	1/4W	200V	400V
CR1210	1/3W	200V	400V
CR2010	1/2W	200V	400V
CR2512	1W	200V	400V

3.2 Derating Curve

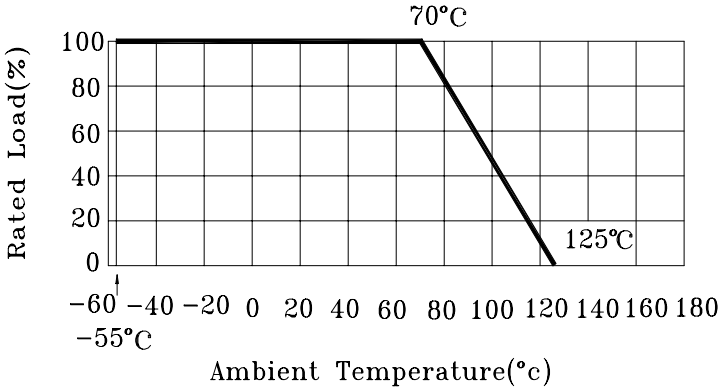

3.3 Operating Temperature Range -55℃~+125℃;
storage condition is 5～30℃, 30～75%RH.

3.4 Rated Voltage

The rated voltage is calculated form the rated power and normal resistance by the following formula: $E=\sqrt{RP}$

Where: E: Rated Voltage (V)
P: Rated Power (W)
R: Normal Resistance (ohm)

In case the value calculated by the formula exceed the maximum working voltage as 3.1 the maximum working voltage shall be regarded as rated

3.5 Resistance Range and Resistance Tolerance

TYPE NO.	Tolerance (%)	Symbol	Resistance Range(ohm)	Standard Resistance Values
CR0402 CR0603 CR0805 CR1206	±0.5%	D	10~1M	E96
CR0201 CR0402 CR0603 CR0805 CR1206 CR1210 CR2010 CR2512	±1%	F	1R0-10M	E96
	±2%	G		
	±5%	J	1R0~22M (0201:1R0-10M)	E24
	±10%	K		
	±20%	M		

4. Dimension

4.1 Dimension

DIMENSIONS	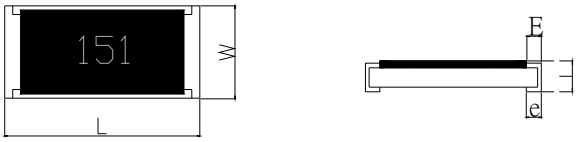				
Type	L	W	T	E	e
CR0201	0.60±0.03	0.30±0.03	0.23±0.03	0.15±0.05	0.15±0.05
CR0402	1.00±0.05	0.50±0.05	0.35±0.05	0.15±0.10	0.20±0.10
CR0603	1.60±0.15	0.80±0.10	0.45±0.10	0.25±0.20	0.30±0.20
CR0805	2.00±0.15	1.25±0.15	0.50±0.10	0.35±0.20	0.40±0.20
CR1206	3.10±0.15	1.60±0.15	0.55±0.10	0.45±0.25	0.40±0.25
CR1210	3.10±0.15	2.50±0.15	0.55±0.15	0.35±0.25	0.60±0.35
CR2010	5.00±0.20	2.50±0.20	0.55±0.15	0.65±0.25	0.50±0.25
CR2512	6.25±0.20	3.10±0.20	0.55±0.15	0.85±0.25	0.95±0.25

4.2. Construction and materials

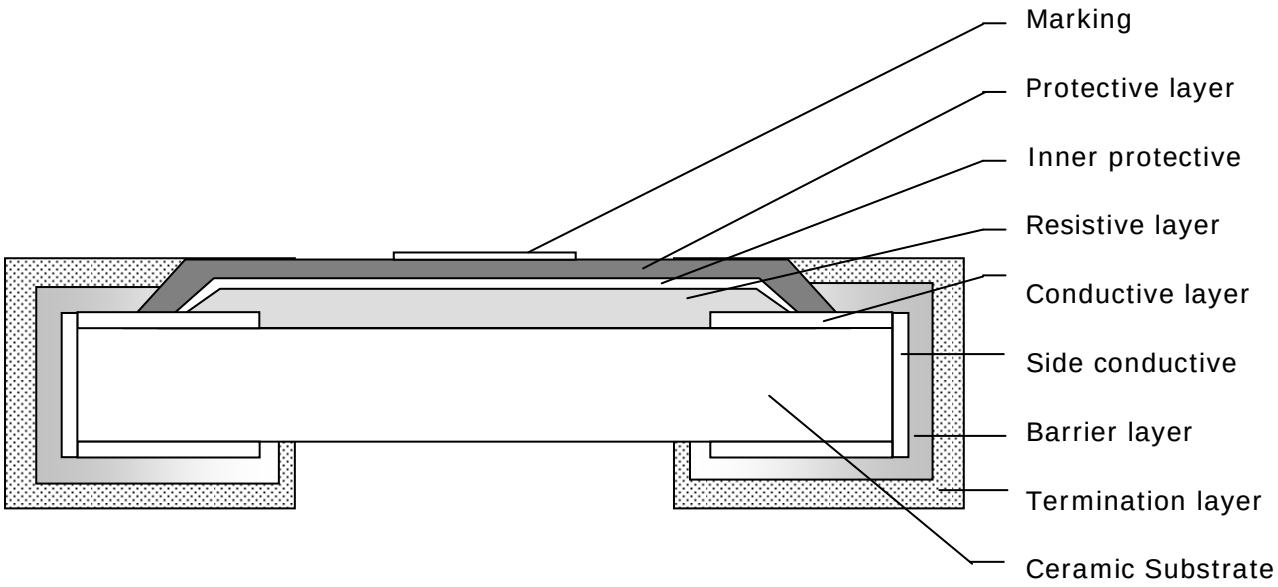

No.	construction	Major material
1	Ceramic substrate	Al203
2	Conductive layer	Ag
3	Side conductive layer	NiCr
4	Resistive layer	Ru02 + glass
5	Inner protective layer	Glass
6	Protective layer	Epoxy
7	Marking	Epoxy
8	Termination barrier layer	Ni
9	Termination layer	Matte Tin

4.3 Electrical Characteristics:

Type	Rated Power at 70℃	Max. Working Voltage	Max. Overload Voltage	T.C.R (ppm/℃)	Resistance Range				Jumper Resistance Value	Jumper Rated Current
					D(±0.5%) E96	F(±1%) E96	G(±2%) E24	J(±5%) E24		
0201	1/20W	25V	50V	±600	----------	1Ω~25Ω	1Ω~25Ω	1Ω~25Ω	50mΩ MAX	0.5A
				±250	----------	25Ω~10MΩ	25Ω~10MΩ	25Ω~10MΩ		
0402	1/16W	50 V	100V	+500～-250	----------	1Ω~10Ω	1Ω~10Ω	1Ω~10Ω	50mΩ MAX	1A
				±200	10Ω~1MΩ	10Ω~10MΩ	10Ω~10MΩ	10Ω~22MΩ		
				±100	----------	----------	----------	----------		
0603	1/10W	50V	100V	+500～-250	----------	1Ω~10Ω	1Ω~10Ω	1Ω~10Ω	50mΩ MAX	1A
				±200	----------	----------	10Ω~10MΩ	10Ω~22MΩ		
				±100	10Ω~1MΩ	10Ω~10MΩ	----------	----------		
0805	1/8W	150V	300V	+500～-250	----------	1Ω~10Ω	1Ω~10Ω	1Ω~10Ω	50mΩ MAX	1.5A
				±200	----------	----------	10Ω~10MΩ	10Ω~22MΩ		
				±100	10Ω~1MΩ	10Ω~10MΩ	----------	----------		
1206	1/4W	200V	400V	+500～-250	----------	1Ω~10Ω	1Ω~10Ω	1Ω~10Ω	50mΩ MAX	1.9A
				±200	----------	----------	10Ω~10MΩ	10Ω~22MΩ		
				±100	10Ω~1MΩ	10Ω~10MΩ	----------	----------		
1210	1/3W	200V	400V	+500～-250	----------	1Ω~10Ω	1Ω~10Ω	1Ω~10Ω	50mΩ MAX	2.2A
				±200	----------	----------	10Ω~10MΩ	10Ω~22MΩ		
				±100	----------	10Ω~10MΩ	----------	----------		
2010	1/2W	200V	400V	+500～-250	----------	1Ω~10Ω	1Ω~10Ω	1Ω~10Ω	50mΩ MAX	3A
				±200	----------	----------	10Ω~10MΩ	10Ω~22MΩ		
				±100	----------	10Ω~10MΩ	----------	----------		
2512	1W	200V	400V	+500～-250	----------	1Ω~10Ω	1Ω~10Ω	1Ω~10Ω	50mΩ MAX	3A
				±200	----------	----------	10Ω~10MΩ	10Ω~22MΩ		
				±100	----------	10Ω~10MΩ	----------	----------		

*ZERO OHM JUMPER<0.05OHM

5. Environmental performance

Description	Specification Limits	Test Methods
Temperature Coefficient	(over 10ohm) ±200 ppm/℃ Max. (lower 10ohm) +500～-250 ppm/℃	JIS C5202 5.2
Short Time Overload	±(1.00%+0.05ohm) Max.	JIS C5202 5.5
Resistance to Soldering Heat	±(1.00%+0.05ohm)Max.	JIS C5202 6.4
Solderability	95% Coverage Min.	JIS C5202 6.4
Load Life	±(3.00%+0.05ohm)Max.	JIS C5202 7.10
Load Life Humidity	±(2.00%+0.05ohm)Max.	JIS C5202 7.5
Temperature Cycle	±(2.00%+0.05ohm)Max.	JIS C5202 7.6
Component high temperature resistance	±(1.00%+0.05ohm) Max.	<260℃ 10second 3times
Component rework/hand soldering temperature resistance	Avoid solder iron tip direct touch the components body	Approx. 350℃ for 3seconds
MSL (moisture sensitive level)	Level 1	J-STD-020C

6. Tapping Specification

Dimensions		A	B	C	F	W
CR0201 CR0402 CR0603 CR0805 CR1206 CR1210	mm	178±2.0	60.0±1.0	13.5±0.5	11.4±0.1	9.00±0.3
	Inch	7.008±0.079	2.362±0.039	0.531±0.020	0.449±0.039	0.354±0.012
CR2010 CR2512	mm	178±2.0	60.0±1.0	13.5±0.5	15.4±1.0	13.0±0.3
	Inch	7.008±0.079	2.362±0.039	0.531±0.020	0.606±0.039	0.512±0.012

Remark: (1)CR0201/CR0402 Quantity per Reel 10,000 pcs/Reel
(2)CR2010/CR2512 Quantity per Reel 4,000 pcs/Reel

Reel

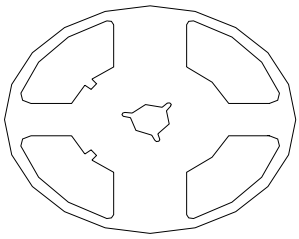

Standard Quantity per Reel
5,000 pcs/Reel

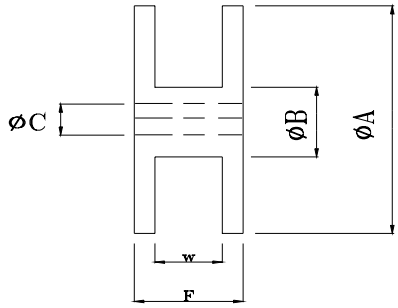

Approval Specification for Thick Film Chip Resistors - Type *CR*

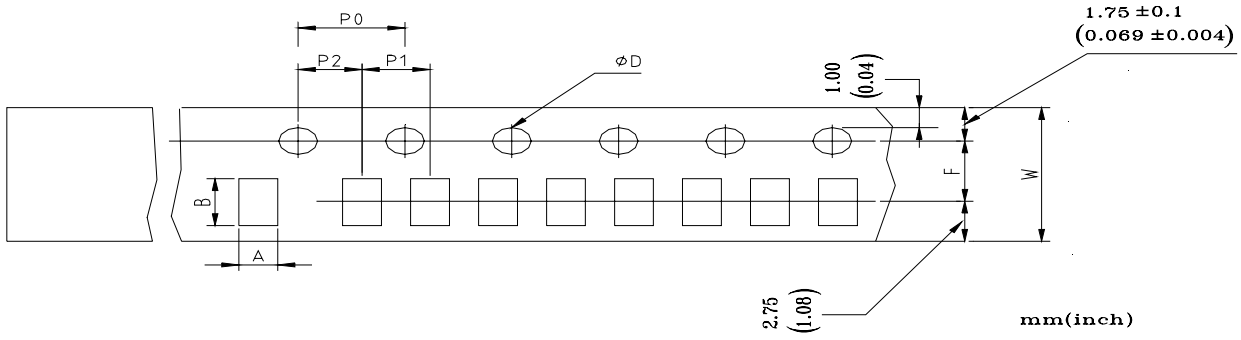

Dimensions		A	B	D	F	P0	P1	P2	W
CR0201	mm	0.38±0.05	0.68±0.05	1.50±0.10	3.50±0.05	4.00±0.10	2.00±0.10	2.00±0.05	8.00±0.20
	inch	0.015 ±0.002	0.027 ±0.002	0.059 ±0.004	0.138 ±0.002	0.157 ±0.004	0.079 ±0.004	0.079 ±0.002	0.315 ±0.008
CR0402	mm	0.65±0.10	1.15±0.10	1.50±0.10	3.50±0.05	4.00±0.10	2.00±0.10	2.00±0.05	8.00±0.20
	inch	0.026 ±0.004	0.045 ±0.004	0.059 ±0.004	0.138 ±0.002	0.157 ±0.004	0.079 ±0.004	0.079 ±0.002	0.315 ±0.008
CR0603	mm	1.10±0.10	1.90±0.10	1.50±0.10	3.50±0.05	4.00±0.10	4.00±0.10	2.00±0.05	8.00±0.20
	inch	0.043 ±0.004	0.075 ±0.004	0.059 ±0.004	0.138 ±0.002	0.157 ±0.004	0.157 ±0.004	0.079 ±0.002	0.315 ±0.008
CR0805	mm	1.65±0.20	2.40±0.20	1.50±0.10	3.50±0.05	4.00±0.10	4.00±0.10	2.00±0.05	8.00±0.20
	inch	0.065 ±0.008	0.094 ±0.008	0.059 ±0.004	0.138 ±0.002	0.157 ±0.004	0.157 ±0.004	0.079 ±0.002	0.315 ±0.008
CR1206	mm	2.00±0.20	3.60±0.20	1.50±0.10	3.50±0.05	4.00±0.10	4.00±0.10	2.00±0.05	8.00±0.20
	inch	0.079 ±0.008	0.142 ±0.002	0.059 ±0.004	0.138 ±0.002	0.157 ±0.004	0.157 ±0.004	0.079 ±0.002	0.315 ±0.008
CR1210	mm	2.80±0.10	3.50±0.10	1.50±0.10	3.50±0.05	4.00±0.10	4.00±0.10	2.00±0.05	8.00±0.20
	inch	0.110 ±0.004	0.138 ±0.004	0.059 ±0.004	0.138 ±0.002	0.157 ±0.004	0.157 ±0.004	0.079 ±0.002	0.315 ±0.008
CR2010	mm	2.90±0.10	5.30±0.10	1.50±0.10	5.50±0.05	4.00±0.10	4.00±0.10	2.00±0.05	12.0±0.10
	inch	0.114 ±0.004	0.209 ±0.004	0.059 ±0.004	0.216 ±0.002	0.157 ±0.004	0.157 ±0.004	0.079 ±0.002	0.472 ±0.004
CR2512	mm	3.40±0.10	6.60±0.10	1.50±0.10	5.50±0.05	4.00±0.10	4.00±0.10	2.00±0.05	12.0±0.10
	inch	0.134 ±0.004	0.260 ±0.004	0.059 ±0.004	0.216 ±0.002	0.157 ±0.004	0.157 ±0.004	0.079 ±0.002	0.315 ±0.004

7.Characteristics And Test Methods

7.1 Electrical characteristics test methods

7.1.1 Resistance Value

Measurement of resistance take place by the bridge methods or by use of a measuring instrument corresponding accuracy, its accuracy being fully reliable with respect to tolerances on resistance. The applied voltage for measurement shall be as specified in Table as following.

Resistance	Voltage applied(V)
1Ω~100Ω	0.3VΩ
100Ω~1KΩ	1VΩ
1KΩ~10KΩ	3VΩ
10KΩ~100KΩ	10VΩ
100KΩ~1MΩ	25VΩ
1MΩ~10MΩ	50VΩ
10MΩ~aboveΩ	100VΩ

7.1.2 Temperature Coefficient of Resistance

In according with 7.1.1 measure initial of resistor mounted on the test board, Then Keep the temperature at each step as following table, hold for 30 minutes after reaching a given temperature and measure resistance under the same condition as initial-value measurement. The temperature coefficient of resistance calculated from these measured values by the following formula.

Temperature coefficient(ppm/℃) = $\frac{R-R_0}{R} * \frac{1}{t-t_0} * 10^6$

Where R = Resistance value at tested temperature
R_0 = Initial resistance value
t = Actual measurement of tested temperature
t_0 = Initial temperature

STEP	TEMPERATURE
1	25±5℃
2	125±5℃

7.1.3 short-Time Overload

In accordance with 7.1.1 measure the initial of resistor mounted on the test socket, then apply to the resistor the voltage corresponding to 2.5 times rated voltage. However, in case the voltage corresponding to 2.5 times the rated voltage exceeds the maximum overload voltage, the maximum overload voltage shall be regarded as test voltage. Eliminate the voltage, leave aside with no load for 30 minutes and then measure resistance under the same condition as in initial-value measurement. At this time, the variation in relation to initial resistance shall be less than ±(1.00%+0.05Ω) for 5% and less than ±(0.5%+0.05 Ω) for 1%.

$$\Delta R\% = \frac{R_2 - R_1}{R_1} * 100 \text{------}(\%)$$

Where R1＝resistance at experiment front in ohms . (Ω)
R2＝resistance at experiment after in ohms . (Ω)

7.1.4 Dielectric withstanding voltage

The applied test voltage shall be slow by increased form 0 V to maximum working voltage with DC voltage across electrode and the center of body for 60±5seconds. At this time there shall be no failure on the resistor as short circuit live, burning, breakdown, etc.

7.2 Mechanical Characteristics and Test Methods

7.2.1 Resistance to Soldering Heat

In accordance with 7.1.1, measure the initial value of a resistor Dip it in a soldering bath at 260±5℃ for 10±0.5 seconds and take out at room temperature. Then, leave it aside for about one and measure resistance under the same condition as in initial value measurement. The variation in relation to the initial

resistance shall be less than, ±(1.00%+0.05Ω) for 5% and less than ±(0.5%+0.05 Ω) for 1%, there being no failure in appearance and mechanical harm.

$$\Delta R\% = \frac{R_2 - R_1}{R_1} * 100 \text{------}(\%)$$

Where R1＝resistance at experiment front in ohms . (Ω)
R2＝resistance at experiment after in ohms . (Ω)

7.2.2 Solderability

Dip the terminal in a flux (methanol solution containing rosin approx. 25% in weight) for one to two sec. and then dip into a soldering bath at 245±5℃ for 2±0.5sec. The solder to be used shall be JIS C 5202 6.5

7.2.3 Bending Strength

Test Method：JIS C 5202 6.1.4
The test printed circuit board equipped with the specimen SMD shall be bend. The specified amount of bend shall be maintained for 5±1 Sec and the number of time shall be one .

Test Conditions : CHIP

Item	Test Time (Sec)	Amount of bend +0.20(mm)
CHIP	5±1	5 or 2 by type
POWER CHIP	5±1	2
CHIP ARRAY	5±1	1

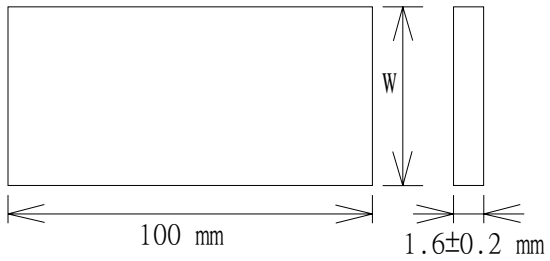

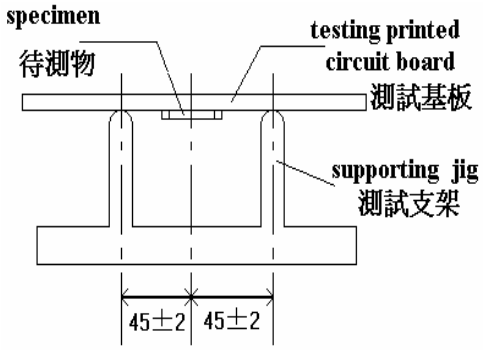

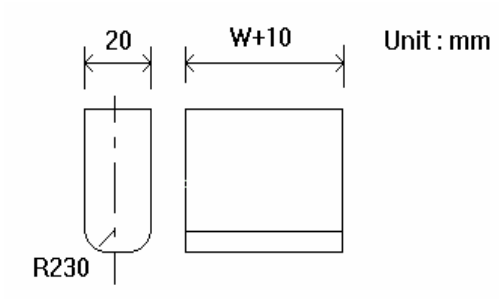

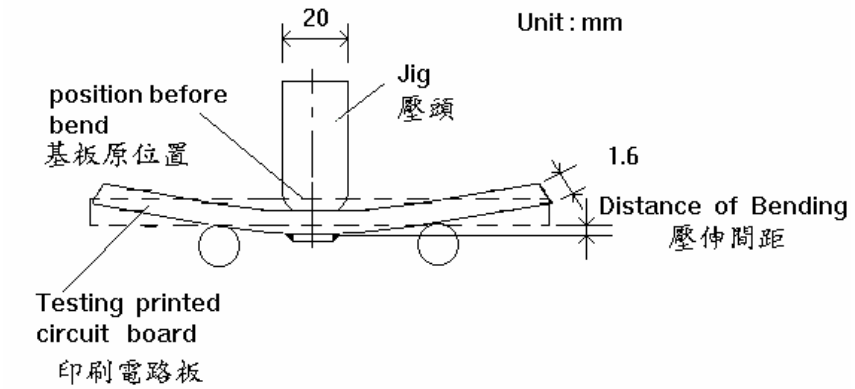

7.3 Temperature Cycling and Test Methods

7.3.1 Low Temperature Operation

In accordance with MIL-STD-55342D PARA 4.7.4, measure the initial value of a resistor mounted on the test substrate and place it at the condition of 25℃ ±3℃, then change the chamber in condition at -65^{+0}_{-5}℃ for 45^{+0}_{-5}mins at work voltage. Take it out at room temperature, leave aside for twenty-four hours and then measure resistance under the same condition as in initial-value measurement. At this time, the variation in relation to the initial resistance shall be below ±(1.00%+0.05Ω) for 5% and shall be below ±(0.5%+0.05Ω) for 1%, there being no mechanical damage.

$$\Delta R\% = \frac{R_2 - R_1}{R_1} * 100 \text{------}(\%)$$

Where R1＝resistance at experiment front in ohms . (Ω)
R2＝resistance at experiment after in ohms . (Ω)

7.3.2 Moisture Resistance

In accordance with 7.1.1, measure the initial value of a resistor mounted on the test substrate . then, leave it in a thermal and humidity chamber condition for 1000 $^{+24}/_{-0}$ hours ，each step as following table. Take it out room temperature, leave aside for about one hour, and then measure resistance under the same condition as in initial-value measurement. At this time the variation in relation in to the initial resistance shall be below ±(2.00%+0.05Ω) for 5% and shall be below ±(0.5%+0.05Ω) for 1%, there being no mechanical damage.

Step	1	2	3	4	5	6	7	8	9	10	11
Temperature(℃)	65	65	25	65	65	25	25	-10	-10	25	25
Humidity(%)	92	92	92	92	92	92	92	0	0	0	92
Time(H:m)	2:30	3:00	2:30	2:30	3:00	2:30	1:30	0:30	3:00	0:30	2:30

$$\Delta R\% = \frac{R_2 - R_1}{R_1} * 100 \text{------}(\%)$$

Where R1＝resistance at experiment front in ohms . (Ω)

R2＝resistance at experiment after in ohms . (Ω)

7.3.3 Endurance for Humidity

In accordance with 7.1.1, measure the initial value of a resistor mounted on the test substrate . The specimen mounted as specified in the chamber at 40 ±2℃ temperature and 90~95% relative humidity ,and then subjected to a voltage cycle consisting of rated D.C. voltage in article 3.4 application of 1h 30 mins and rest of 30 mins repeatedly for one the test durations given in 1000 $^{+48}/_{-0}$ hours.Then, take it out at room temperature, leave aside for about one hour, and measure resistance under the same condition as in initial-value measurement. At this time, the variation in relation to the initial resistance shall be below ±(2.00%+0.05Ω) for 5% and shall be below ±(0.5%+0.05Ω) for 1%, there being no mechanical damage.

$$\Delta R\% = \frac{R_2 - R_1}{R_1} * 100 \text{------}(\%)$$

Where R1＝resistance at experiment front in ohms . (Ω)

R2＝resistance at experiment after in ohms . (Ω)

7.3.4 Life

Test Method: MIL-STD-202F METHOD 108A

The specimen is measured for its resistance value in accordance with 1-1. The specimen mounted as specified in the chamber at the rated category temperature 70±2℃, and with the rated d.c. voltage application 1000 $^{+24}/_{-0}$ hours(42day). Next, the specimen is taken out of the test chamber, allowed to stand at room temperature without loaded for approximately 1h unless otherwise specified, measured for its resistance values again in accordance with 1-1. And then the variation in the resistance values taken before and after this test is calculated. At this time, the variation in relation to the initial resistance shall be below ±(3.00%+0.05Ω) for 5% and shall be below ±(1%+0.05Ω) for 1%, there being no mechanical damage.

$$\Delta R\% = \frac{R_2 - R_1}{R_1} * 100 \text{------}(\%)$$

Where R1＝resistance at experiment front in ohms . (Ω)

R2＝resistance at experiment after in ohms . (Ω)

7.3.5Thermal shock

Test Method: MIL-STD-202F METHOD 107G

The specimen is measured for its resistance value in accordance with 1-1,and then placed in the test chamber.The test chamber at that temperature for 125℃and-55℃ it shall be 5 cycles.The specimen is allowed to stand at room temperature for 1 hr or more but not more than 2 hr,measured for its resistance value again in accordance with 1-1,and then the variation in the resistance values taken before and after this test is calculated. At this time, the variation in relation to the initial resistance shall be below ±(1.00%+0.05Ω) for 5% and shall be below ±(0.5%+0.05Ω) for 1%, there being no mechanical damage.

$$\Delta R\% = \frac{R_2 - R_1}{R_1} * 100 \text{------}(\%)$$

Where R1＝resistance at experiment front in ohms . (Ω)

R2＝resistance at experiment after in ohms . (Ω)

7.3.6 Peel force of top cover tape

The peel force of top cover tape shall be 0.1N to 0.7N(10 to 70 gf), when the top cover tape is pulled at a speed of 200 mm/min with the angle between the tape during peel and the direction of unreeling maintained at 165 to 180 degree as illustrated in Fig-10.

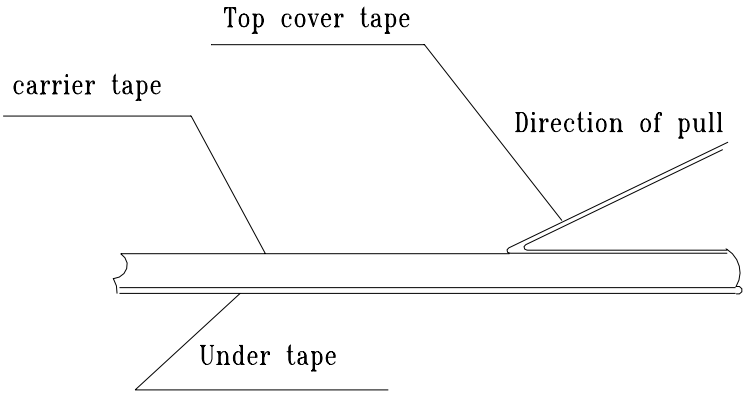

7.3.7 Recommend reflow soldering profile

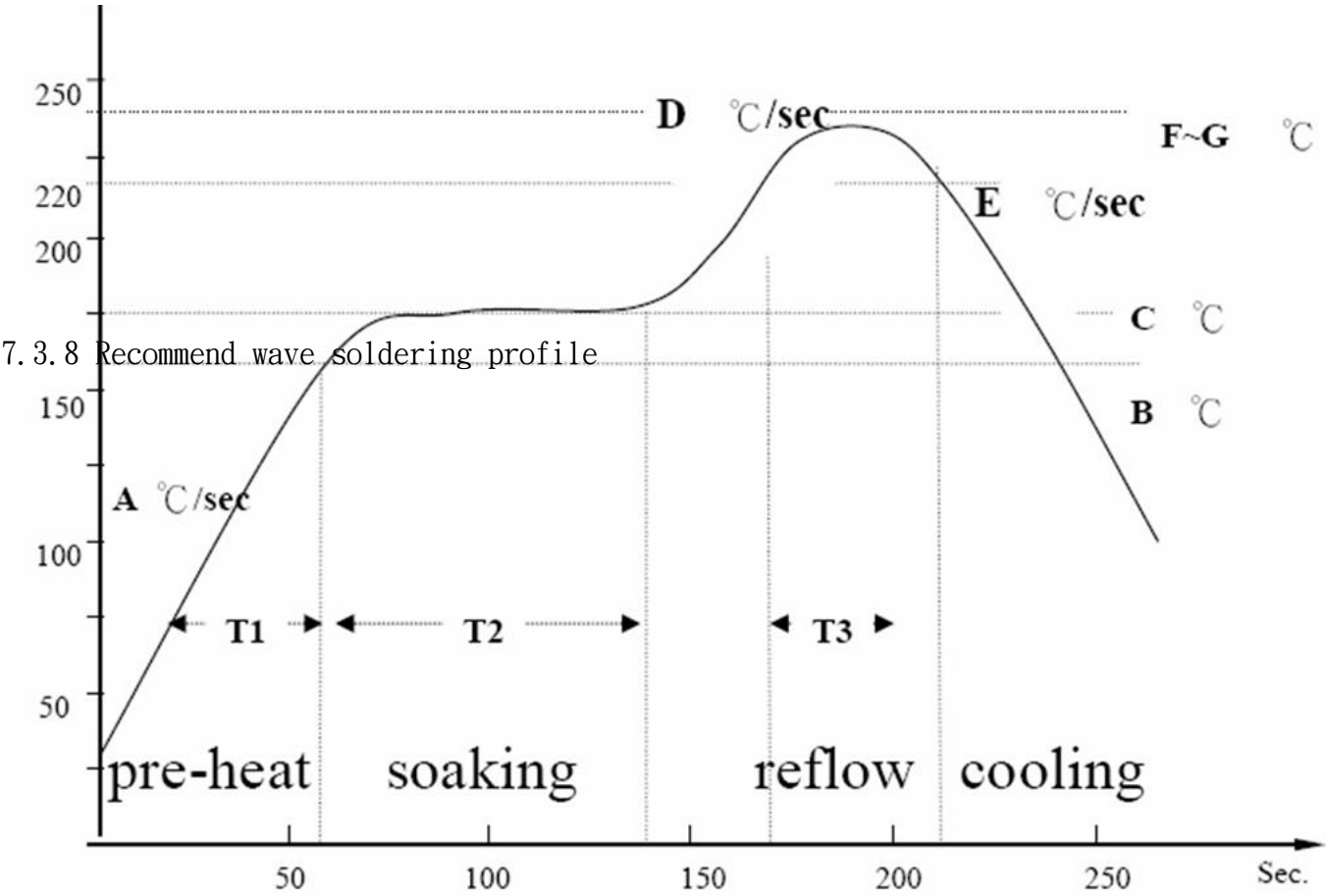

7.3.8 Recommend wave soldering profile

波峰焊曲线

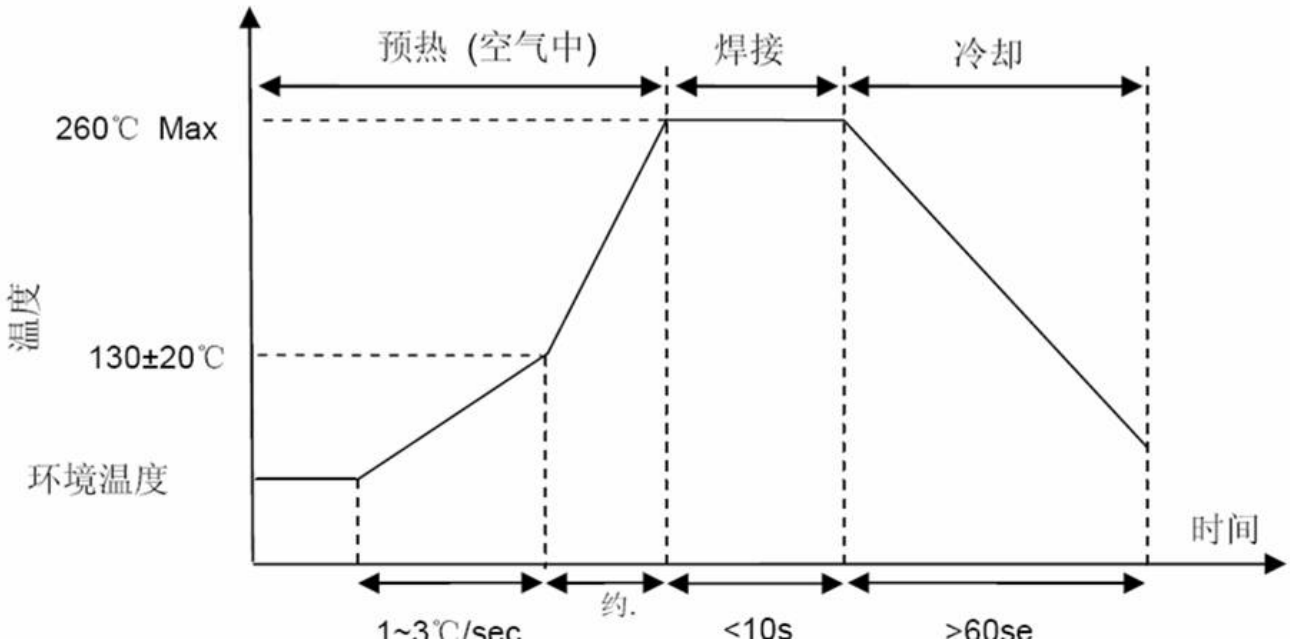

X-ON Electronics

Largest Supplier of Electrical and Electronic Components

Click to view similar products for Thick Film Resistors - SMD ***category:***

Click to view products by LIZ ***manufacturer:***

Other Similar products are found below :

CR-05FL7--150R CR-05FL7--19K6 CR-05FL7--243R CR-05FL7--40K2 CR-05FL7--698K CR-12FP4--324R CR-12JP4--680R M55342K06B1E78RS3 M55342K06B6E19RWL M55342K06B6E81RS3 M55342M05B200DRWB M55342M06B4K70MS3 MC0603-511-JTW 742C083750JTR MCR01MZPF1202 MCR01MZPF1601 MCR01MZPF1800 MCR01MZPF6201 MCR01MZPF9102 MCR01MZPJ113 MCR01MZPJ121 MCR01MZPJ125 MCR01MZPJ751 MCR03EZHJ103 MCR03EZPFX2004 MCR03EZPJ270 MCR03EZPJ821 MCR10EZPF1102 MCR18EZPJ330 RC0603F1473CS RC0603F150CS RC1005F1152CS RC1005F1182CS RC1005F1372CS RC1005F183CS RC1005F1911CS RC1005F1912CS RC1005F203CS RC1005F2052CS RC1005F241CS RC1005F2431CS RC1005F3011CS RC1005F303CS RC1005F4321CS RC1005F4642CS RC1005F471CS RC1005F4751CS RC1005F5621CS RC1005F6041CS RC1005J106CS