DS9488-GP8/DS9122x Evaluation System

Multi-Device Programmer for 1-Wire and I²C Devices

General Description

The DS9488-GP8 multi-device programmer for 1-Wire® and I²C devices simultaneously programs up to 8 devices that use the 1-Wire or I²C bus programming interface. A variety of socket adapters (DS9122 series) allows one programmer to support multiple IC types. Software plugins for every supported device are quickly and easily installed.

LED status indicators immediately identify the pass/fail status of individual devices.

Configuration settings allow access to device-specific features such as memory protection, read/write permissions, authentication, etc. These can be store as a configuration profile and automatically loaded in subsequent programming sessions.

A USB interface connects the programmer to any computer. A convenient Windows® application allows for easy operation of the programmer.

Available socket adapters allow the DS9488-GP8 to program a variety of Maxim devices. The *Ordering Information* lists the socket adapters and the devices they support.

Benefits and Features

- Programs Up to 8 Devices in a Single Session
- Multiple Devices Supported by One Programmer
- Socket Adapters Available for Most Devices
- Easily Add Support for New Devices
- Intuitive Windows Application Reduces Learning Time
- Standard USB Interface Connects to Any Computer
- Status LEDs Provide Immediate Pass/Fail Confirmation

EV System Contents

- DS9488-GP8 programmer board
- USB A to USB Micro-B cable

DS9488-GP8 Programmer

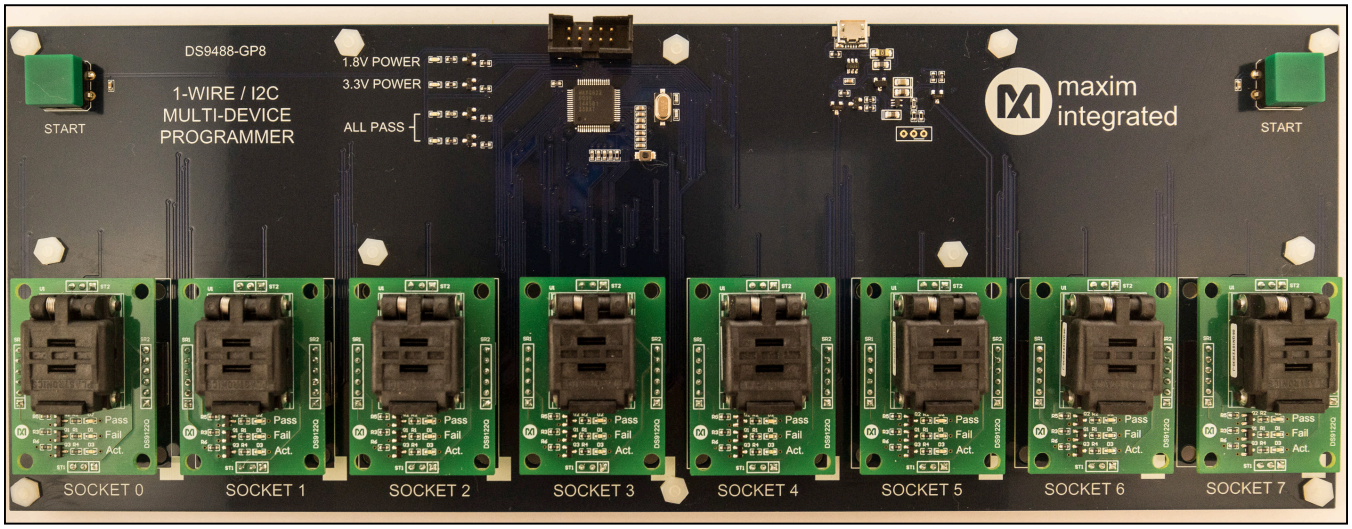

1-Wire is a registered trademark of Maxim Integrated Products, Inc.

Windows is a registered trademark and registered service mark of Microsoft Corporation.

***Ordering Information* appears at end of data sheet.**

19-7813; Rev 1; 5/16

maxim integrated™

Setup

Required Equipment

- Computer equipped with Windows and .NET Framework 4.5 or later
- DS9488-GP8 programmer board
- USB A to USB Micro-B cable
- One to eight socket adapters for the intended ICs
- One to eight ICs to be programmed

Selecting Socket Adapters

One to eight socket adapters matching the IC packages must be purchased separately from Maxim before the programmer can be used. No socket adapters are included with the DS9488-GP8.

Most socket adapters program a single device at a time and take up one socket site. Dual socket adapters cover two socket sites, but each IC has a dedicated set of status LEDs on the PCB as shown in Figure 1.

The socket adapters employ ESD-sensitive components. Observe safe ESD practices when handling the socket adapters.

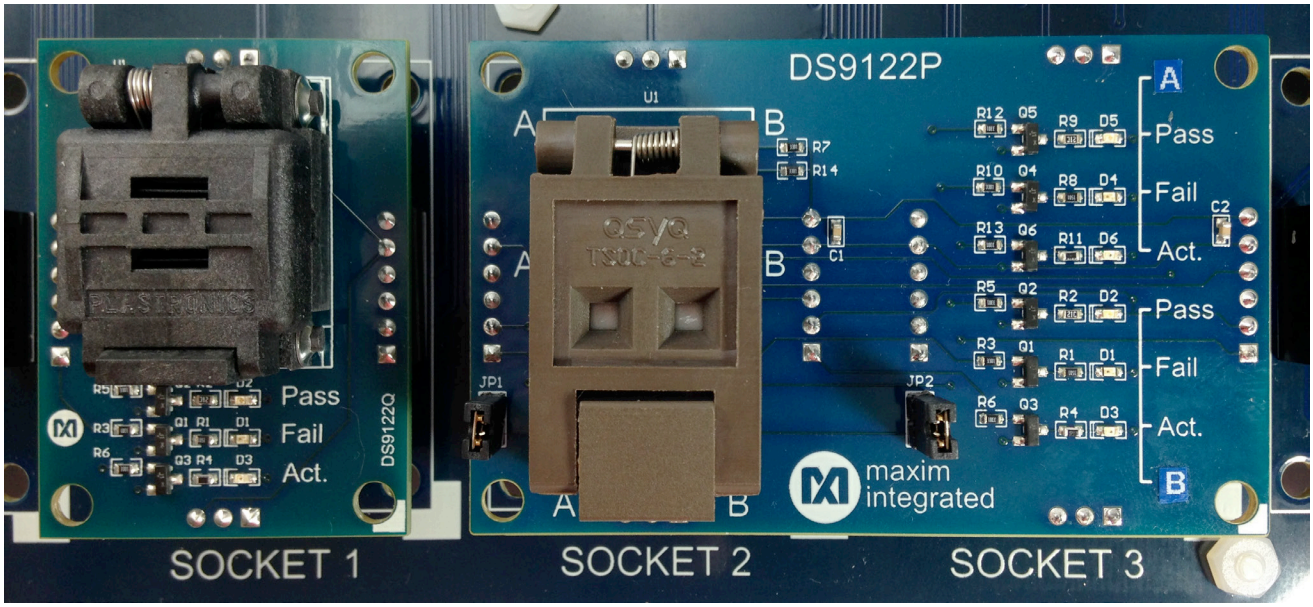

Figure 1. Single and Dual IC Socket Adapters

Application Installation

1) Download the latest version of the 1-Wire + I2C Multi-Device Programmer software from the **Maxim website**. Note that a free account is required to download software from the **Maxim website**.
2) While observing safe ESD practices, carefully remove the DS9488-GP8 board from its packaging. Inspect the board to ensure that no damage occurred during shipment.
3) Connect the DS9488-GP8 to a PC using the supplied USB cable. All LEDs on the DS9488-GP8 momentarily illuminate. One or more LEDs might remain on. The DS9488-GP8 must be connected during application installation.
4) Click on the setup application to begin installation.
5) Follow the installation instructions. If prompted, allow the DS9488-GP8 USB drivers to be installed.
6) Install the desired device-specific plugins for programming.

Device-Specific Plugin Installation

Install device-specific plugins using the application.

1) Obtain the compressed plugin package from Maxim. The package name incorporates the name of the device. For example, DS2431 Programmer Plugin supports all packages of the DS2431.
2) Navigate to the **Application Setup** tab and click on the **Device Plugins** radio button. See Figure 2.
3) Click on the **View Device Folder** button. Copy the package into the displayed folder.
4) Extract the .dll file and .pdf file for each device.
5) The plugins in this folder are automatically loaded when the application is launched. To load a plugin for immediate use, click on the **Load Device Plugin** button and select the corresponding .dll file.

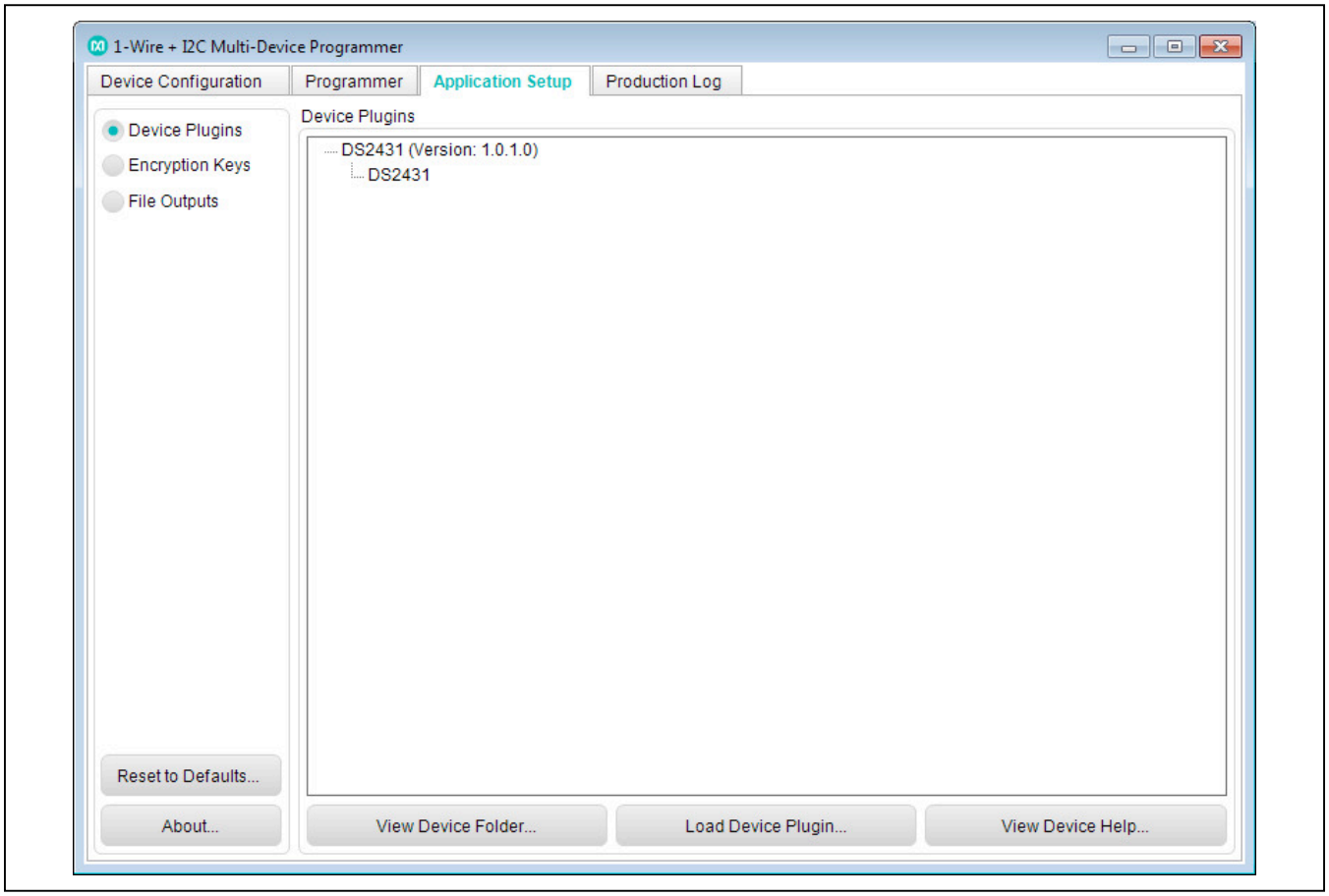

Figure 2. Loaded Device Plugins

Programming

If socket adapters have not been installed, remove power from the DS9488-GP8. Install the socket adapters, and reapply power.

The programming procedure has three steps:

- Device configuration
- Production file creation
- Programming

Device Configuration

1) Navigate to the **Device Configuration** tab, shown in Figure 3.
2) Select the device type to be programmed.
3) Configure the device-specific options. Information about the options can be found in the IC data sheet and also in .pdf files under the **Application Setup** tab, **View Device Help**.
4) If desired, click **Save As...** to record the configuration options.

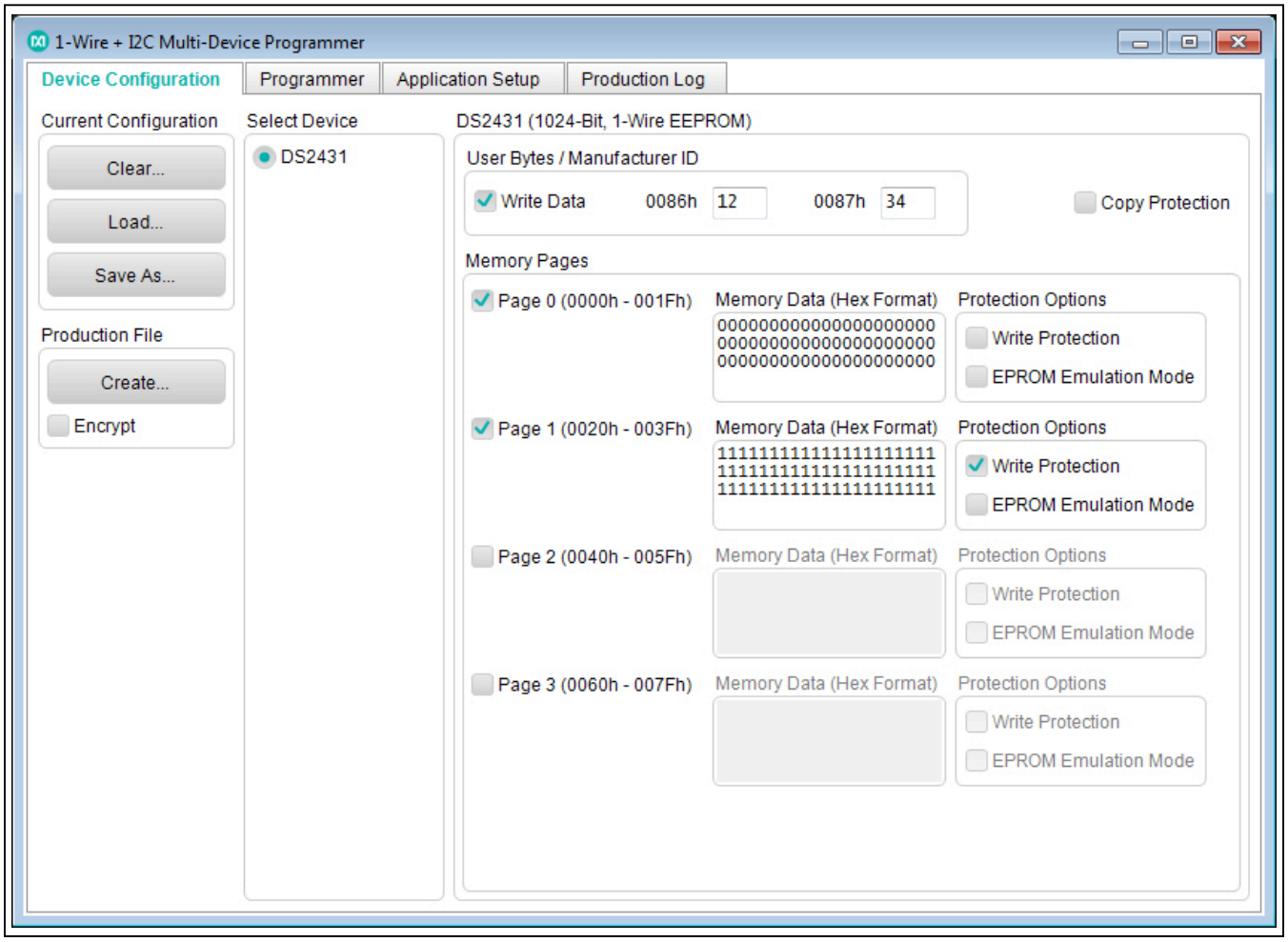

Figure 3. Device Configuration

Production File Creation

The production file compiles all the configuration information and data into a single .xml file to be used by the programmer. After the device configuration has been input, press the **Production File Create** button and save the file to the folder defined in the **Application Setup**, **File Outputs** field.

The programmer offers the option to encrypt the production file for secure transfer between sites.

Programming

1) Populate the desired sockets.
2) Navigate to the **Programmer** tab and select the active sockets as shown in Figure 4. An error is generated during programming if an active socket is not populated with an IC.
3) Make sure the programmer is connected. If not, select **Auto Detect** under the **COM** button. Then click on the **Connect** button. The text below the **Connect** button indicates the programmer is connected.
4) Load a previously generated production file using the **Load Production File...** button.
5) Press either **Start** button on the programmer board or the **Start** button on the **Programmer** tab. The active LEDs on each socket board illuminate during programming and the progress bar advances.
6) When programing is complete, the ALL PASS indicator on the programmer is green if all devices programmed and verified correctly. The indicator is red if any of the devices fail verification.
7) The application keeps a running summary of the programming session. The cumulative results of each session are logged in the **Outputs** folder.

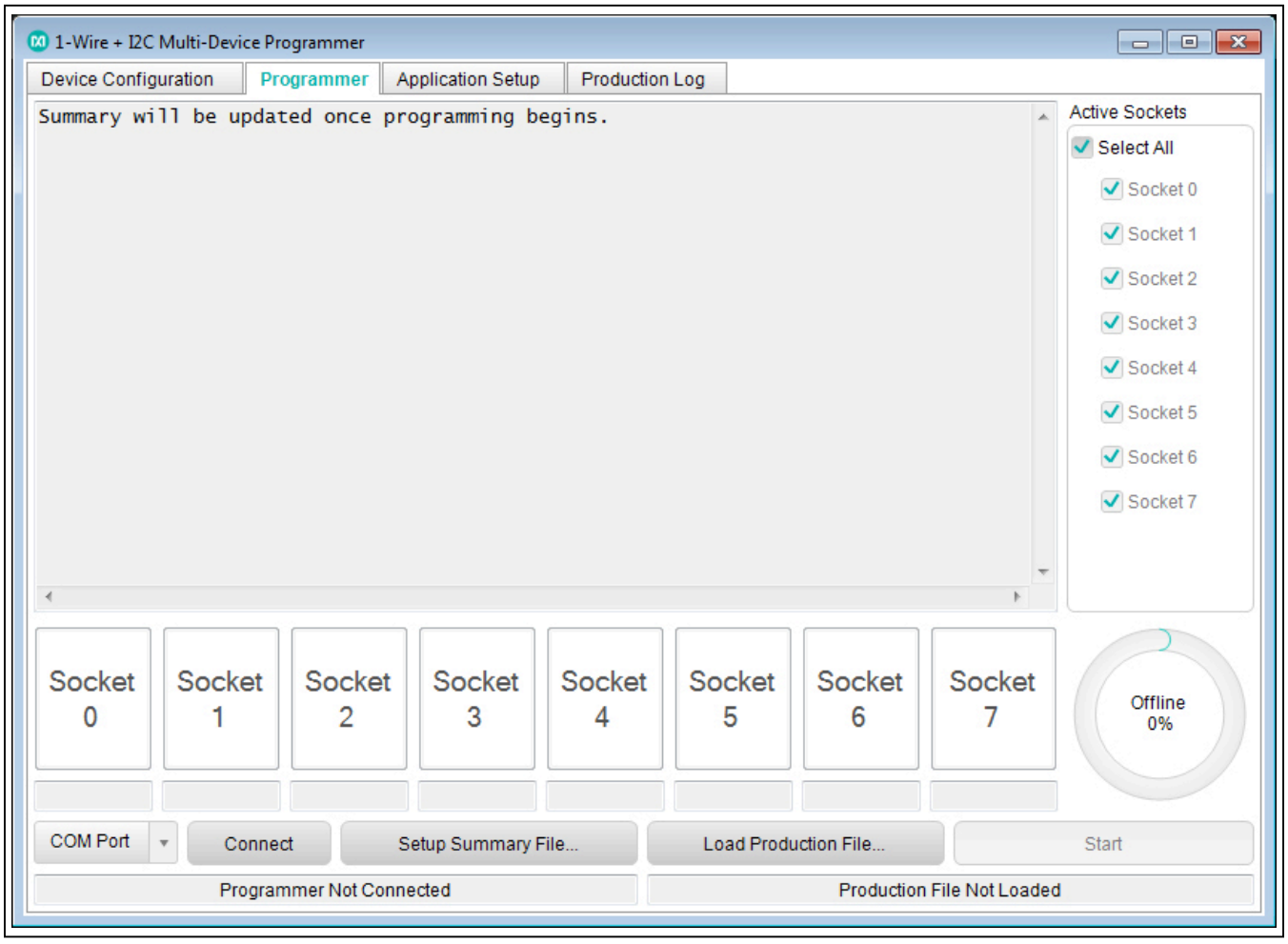

Figure 4. Programming Dialog

Figure 5 shows the application following a programming session in which sockets 1–5 are populated, and socket 4 failed post-programming verification. Figure 6 shows the programmer hardware after the same programming session with the pass/fail LEDs illuminated.

Production File Encryption

The application provides the option to encrypt production files so they can be securely transferred between a master (configuration) system and one or more programming systems. The application generates an RSA public/private key pair that is used for the encryption and decryption. Figure 7 illustrates the procedure for generating and installing encryption keys and creating and loading an encrypted production file. One key pair should be created by the master system and shared among all the programming systems.

The application loads both encrypted and nonencrypted production files if encryption keys are installed. Attempts to load an encrypted production file without first installing the encryption keys generate an error.

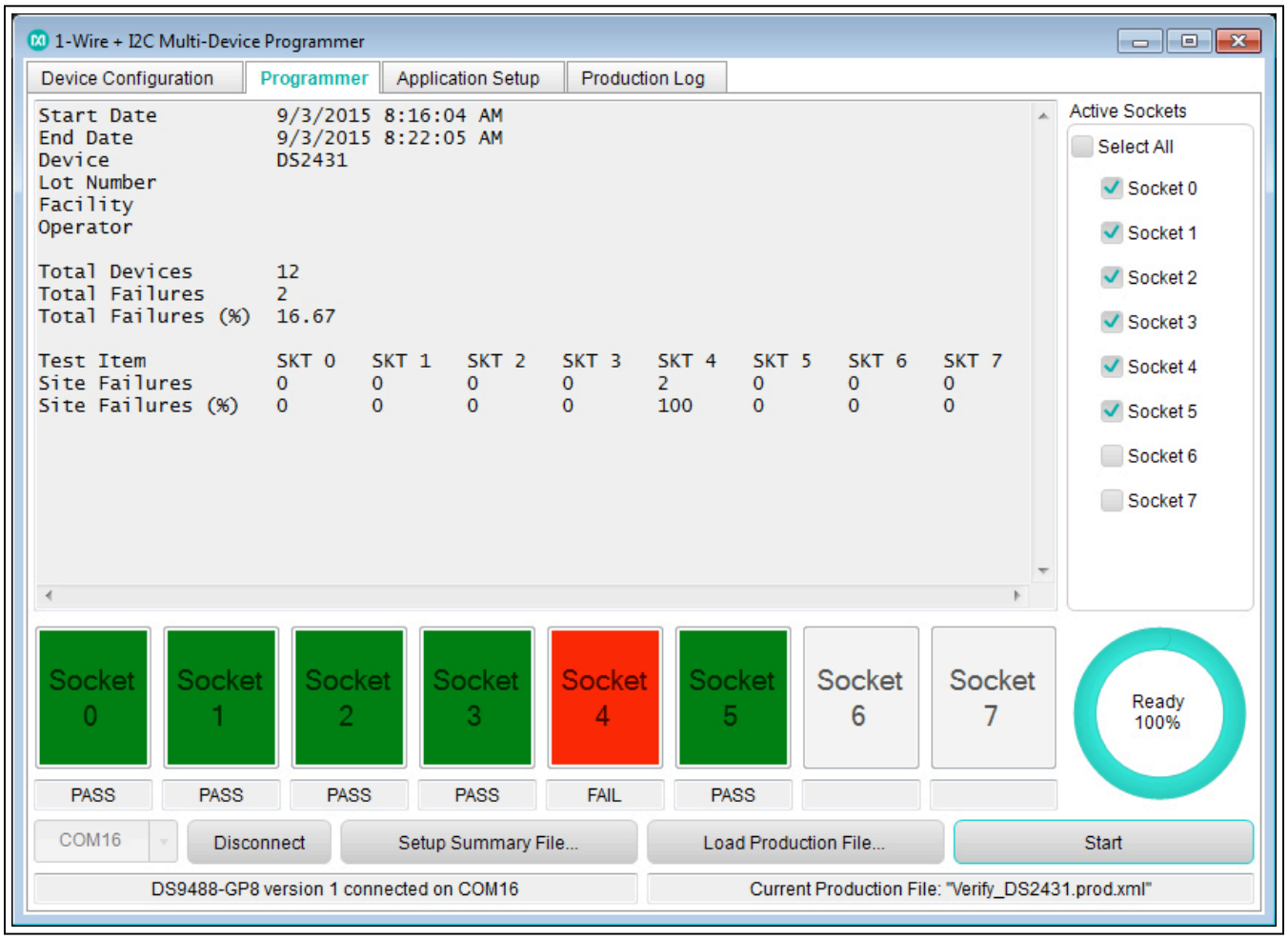

Figure 5. Example Session—GUI

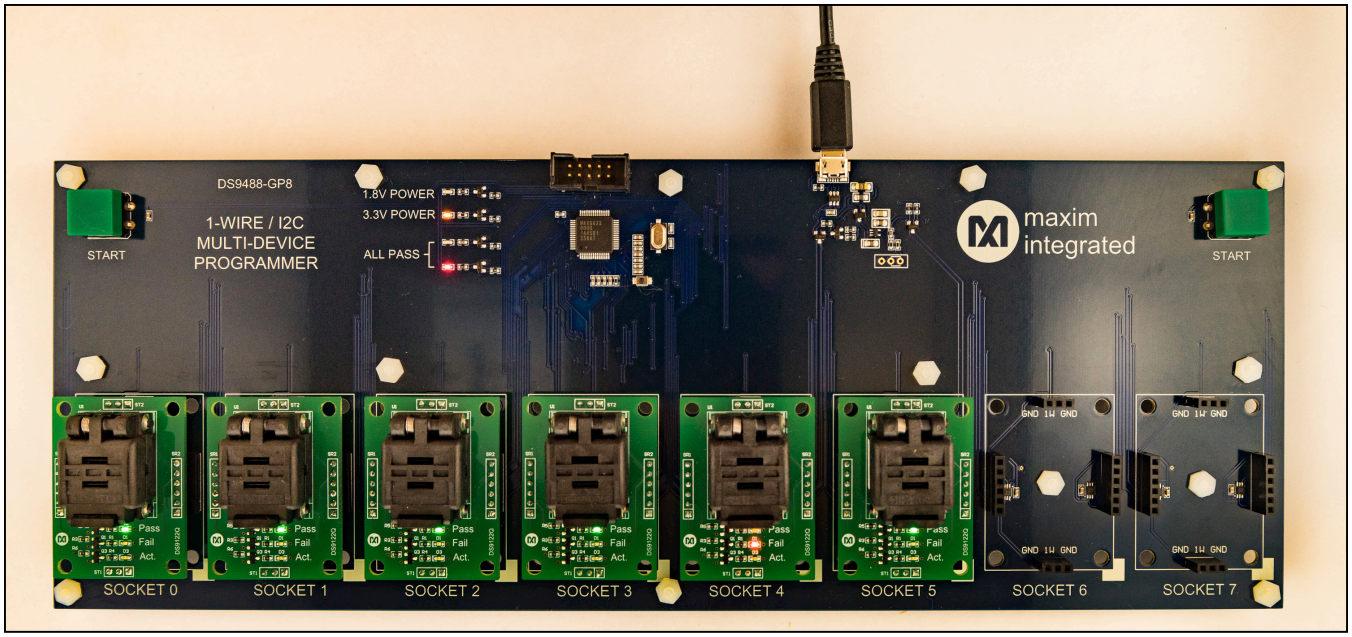

Figure 6. Example Session—Programmer

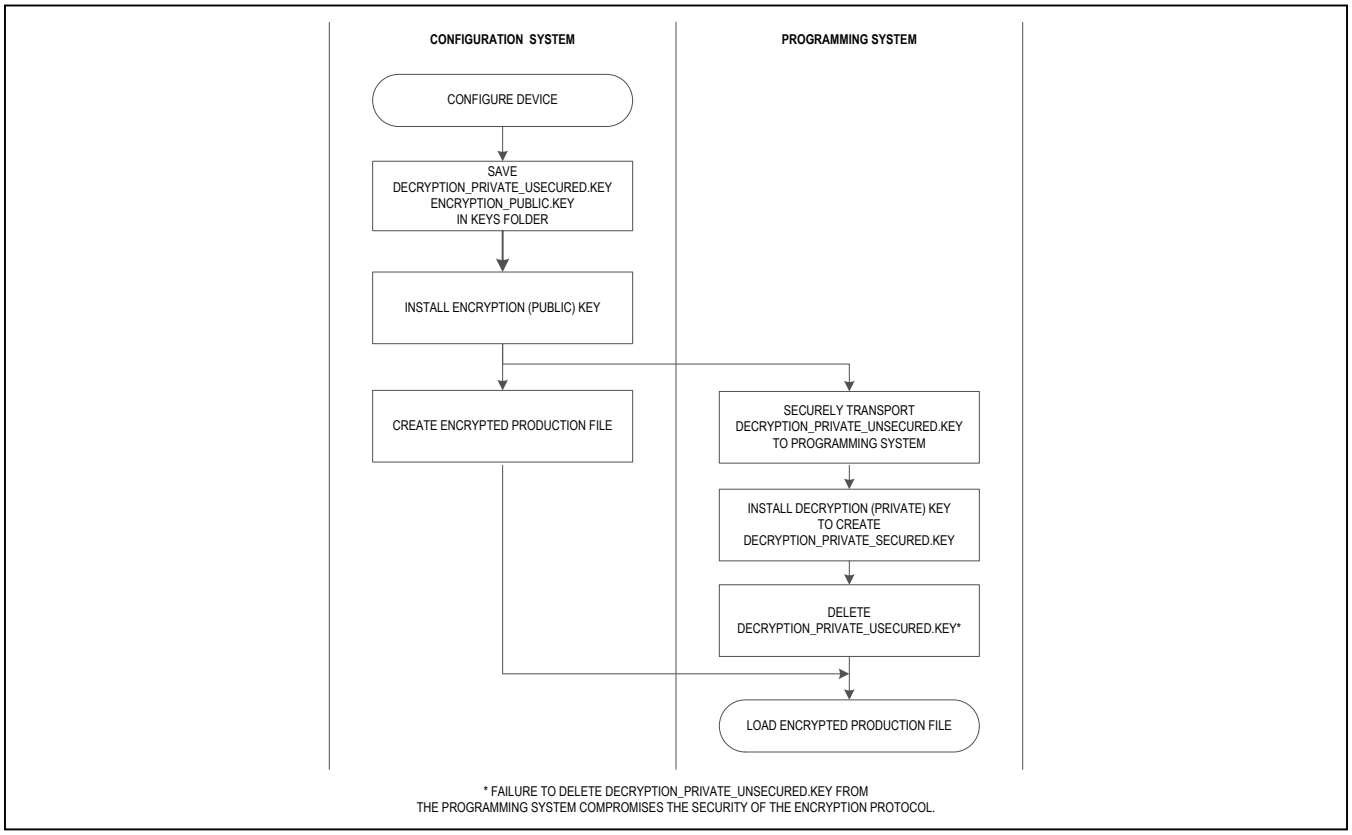

Figure 7. Using Encrypted Production Files

Key Generation and Installation

1) On the master system, navigate to **Generate Key Pair** under the **Application Setup → Encryption Keys** dialog. Two keys are generated in the **Keys** folder:
   - decryption_private_unsecured.key (unencrypted 1024-bit private key)
   - encryption_public.key (unencrypted 1024-bit public key)
2) Install the public key on the master system by clicking on the **Install Encryption (Public) Key** button and selecting **encryption_public.key**.
3) Securely transport decryption_private_unsecured.key to the keys directory of the programming system.
4) On the programming system navigate to the **Application Setup → Encryption Keys** dialog. Click **Install Decryption (Private) Key** and select **decryption_private_unsecured.key**. This creates a new encrypted private key (decryption_private_secured.key) using the Windows Data Protection API that is unique to the production computer.
5) Erase **privkey_unencrypted.key** from the programming system.

Producing Encrypted Production Files

1) Load or create a configuration through the **Device Configuration** tab.
2) Select the **Encrypt** option.
3) Press the **Create** button. The production file is encrypted using the public key and placed in the outputs folder.

Troubleshooting

Programming failures can sometimes be caused by incorrect settings in the **Device Options** dialog. Refer to the appropriate data sheet for details of the configuration options.

The application keeps a detailed log of the programmer sessions, which can be used to troubleshoot problems. The log file is in .txt format and located in the **Outputs** folder.

Go to **support.maximintegrated.com/micro** for technical support.

Component List, Schematics, and PCB Layout

See the following links for component information, schematics, and PCB layout:

- **DS9488 BOM**
- **DS9488 schematic**
- **DS9488 PCB layout**
- **DS9122P BOM**
- **DS9122P schematic**
- **DS9122P PCB layout**
- **DS9122Q BOM**
- **DS9122Q schematic**
- **DS9122Q PCB layout**

Ordering Information

PART	TYPE	SUPPORTED DEVICES
DS9488-GP8#	8-socket multi-device programmer	—
DS9122P#	6-pin TSOC dual socket adapter	DS2431P DS28E15P DS28E22P DS28E25P DS2431P-A1 DS28EL15P DS28EL22P DS28EL25P
DS9122Q#	6-pin TDFN (3mm x 3mm)socket adapter	DS2431Q DS28E15Q DS28EL15Q DS28EL22Q DS28EL25Q DS28E22Q DS28E25Q

#Denotes RoHS compliant.

**Future product—contact factory for availability.*

Device-Specific Plugins for Programming

DEVICE PLUGIN	AVAILABILITY	SUPPORTED DEVICES
DS2431	Online	DS2431P DS2431Q DS2431P-A1
DS28E(L)15_22_25	Under NDA	DS28E15P DS28E15Q DS28EL15P DS28EL15Q DS28E22P DS28E22Q DS28EL22P DS28EL22Q DS28E25P DS28E25Q DS28EL25P DS28EL25Q

Revision History

REVISION NUMBER	REVISION DATE	DESCRIPTION	PAGES CHANGED
0	11/15	Initial release	—
1	5/16	Updated *Benefits and Features*, *EV System Contents*, *Required Equipment*, *Selecting Socket Adapters*, *Applicatoin Installation*, *Device-Specific Plugin Installation*, *Component List, Schematics*, and *PCB Layout*, and *Ordering Information* sections, and added *Device-Specific Plugins for Programming* section	1, 2, 3, 8, 9

For pricing, delivery, and ordering information, please contact Maxim Direct at 1-888-629-4642, or visit Maxim Integrated's website at www.maximintegrated.com.

Maxim Integrated cannot assume responsibility for use of any circuitry other than circuitry entirely embodied in a Maxim Integrated product. No circuit patent licenses are implied. Maxim Integrated reserves the right to change the circuitry and specifications without notice at any time.

DS9488-GP8 BILL OF MATERIALS (BOM); Rev 0; 11/15

Designator	Quantity	Description	Manufacture Name	Part Number
C1, C2, C3, C5, C11	5	1uF Ceramic Capacitor (0603)	Taiyo Yuden	LMK107B7105KA-T
C4, C6, C8, C10, C12, C13, C16, C18, C19, C20, C21, C22, C23, C24, C25, C26, C27, C28, C29, C30, C31, C32, C33, C34, C35	25	0.1uF Ceramic Capacitor (0603)	Kemet	C0603C104K4RACTU, C0603C104K8RACTU
C7, C9	2	18pF Ceramic Capaitor (0603)	TDK Corporation	C1608C0G1H180J080AA
C14, C17	2	2.2uF Ceramic Capacitor (0805)	Murata Electronics North America	GRM21BF51C225ZA01L
C15	1	10uF Ceramic Capacitor (0805)	TDK Corporation	C2012X5R1A106K125AB
CN1	1	USB Micro B Connector	FCI	10103594-0001LF
D1	1	Common Cathode Diode	Diodes Inc	SBR05U20SN-7
D2	1	Red LED (0603)	Lite-On Inc	LTST-C193KRKT-5A
D3	1	Green LED (0603)	Dialight	598-8081-107F
D4	1	Yellow LED (0603)	Wurth Electronics Inc	150060YS75000
D5	1	Blue LED (0603)	OSRAM Opto Semiconductors Inc	LB Q39G-L2N2-35-1
FB1	1	Ferrite (0603)	Murata Electronics North America	BLM21PG221SN1D
J1	1	10 Pin JTAG Connector	TE Connectivity	5104338-1
MechSC1 - MechSC20	20	4-40x1/4" Machine Screw	B&F Fastener Supply	PMSSS 440 0025 PH
MechSO1 - MechSO20	20	Aluminum Standoff	Keystone Electronics	2203
Q1, Q2, Q3, Q5	4	P-Channel MOSFET (SOT-23)	International Rectifier	PMV65XP,215
Q4, Q6, Q8, Q9	4	N-Channel MOSFET(SOT-23)	ON SEMICONDUCTOR	BSS138LT1G
Q7	1	N-Channel MOSFET(SOT-23)	ON SEMICONDUCTOR	BSS138LT1G
R1, R2, R3, R4	4	1.74kΩ Resistor (0603)	Panasonic Electronic Components	ERJ-3EKF1741V
R5, R7, R9	3	47kΩ Resistor (0603)	Panasonic Electronic Components	ERJ-3GEYJ473V
R6, R11, R20, R22, R29	5	100kΩ Resistor (0603)	Yageo	RC0603FR-07100KL
R8, R12, R24, R26	4	1Ω Resistor (0603)	Yageo	RC0603FR-071KL
R10, R13	2	4.99Ω Resistor (0603)	Yageo	RC0603FR-074R99L
R14	1	51kΩ Resistor (0603)	Panasonic Electronic Components	ERA-3AEB513V
R15	1	41.2kΩ Resistor (0603)	Panasonic Electronic Components	ERA-3AEB4122V
R16	1	107kΩ Resistor (0603)	Panasonic Electronic Components	ERA-3AEB1073V
R17	1	10Ω Resistor (0603)	Panasonic Electronic Components	ERJ-8GEYJ100V
R18	1	1.5kΩ Resistor (0603)	Panasonic Electronic Components	ERJ-3EKF1501V
R19	1	16kΩ Resistor (0603)	Panasonic Electronic Components	ERJ-3EKF1622V
R21, R25, R28, R30	4	3.3kΩ Resistor (0603)	Panasonic Electronic Components	ERJ-3EKF3301V
R23	1	2.4kΩ Resistor (0603)	Vishay Dale	CRCW06032K43FKEA
R27	1	4.7kΩ Resistor (0603)	Panasonic Electronic Components	ERJ-3EKF4701V
RT1	1	PTC Fuse (1206)	Bourns Inc.	MF-NSMF012-2
S1	1	Tactile Switch	Omron Electronics Inc	B3U-1000P
S2, S4	2	Tactile Switch	Omron Electronics Inc	B3F-4055
MechS2, MechS4	2	Square Green Switch Cap	Omron Electronics Inc	B32-1350
S3	1	Do Not Populate	TE Connectivity	SSA12
SR1 - SR16	16	6 Pin Connector	Sullins Connector Solutions	PPPC061LFBN-RC
ST1 - ST16	16	3 Pin Connector	Sullins Connector Solutions	PPPC031LFBN-RC
U1	1	16-Bit Microcontrollers with Infrared Module and Optional USB	Maxim Integrated	MAXQ622G-0000+
U2, U4	2	Beyond-the-Rails 16:2 Multiplexer	Maxim Integrated	MAX14661ETI+
U3, U6	2	I2C To 1-Wire Master	Maxim Integrated	DS2484R+
U5	1	High PSRR, Low-Dropout, 150mA Linear Regulator	Maxim Integrated	MAX8892EXK+
U7	1	Dual High-Speed Differential ESD-Protection IC	Maxim Integrated	MAX3207EAUT+
U8 - U23	16	4 Channel +/- 30kv ESD Protector	Maxim Integrated	MAX13204EALT+
X1	1	12MHz Crystal	ECS Inc.	ECS-120-20-3X-TR

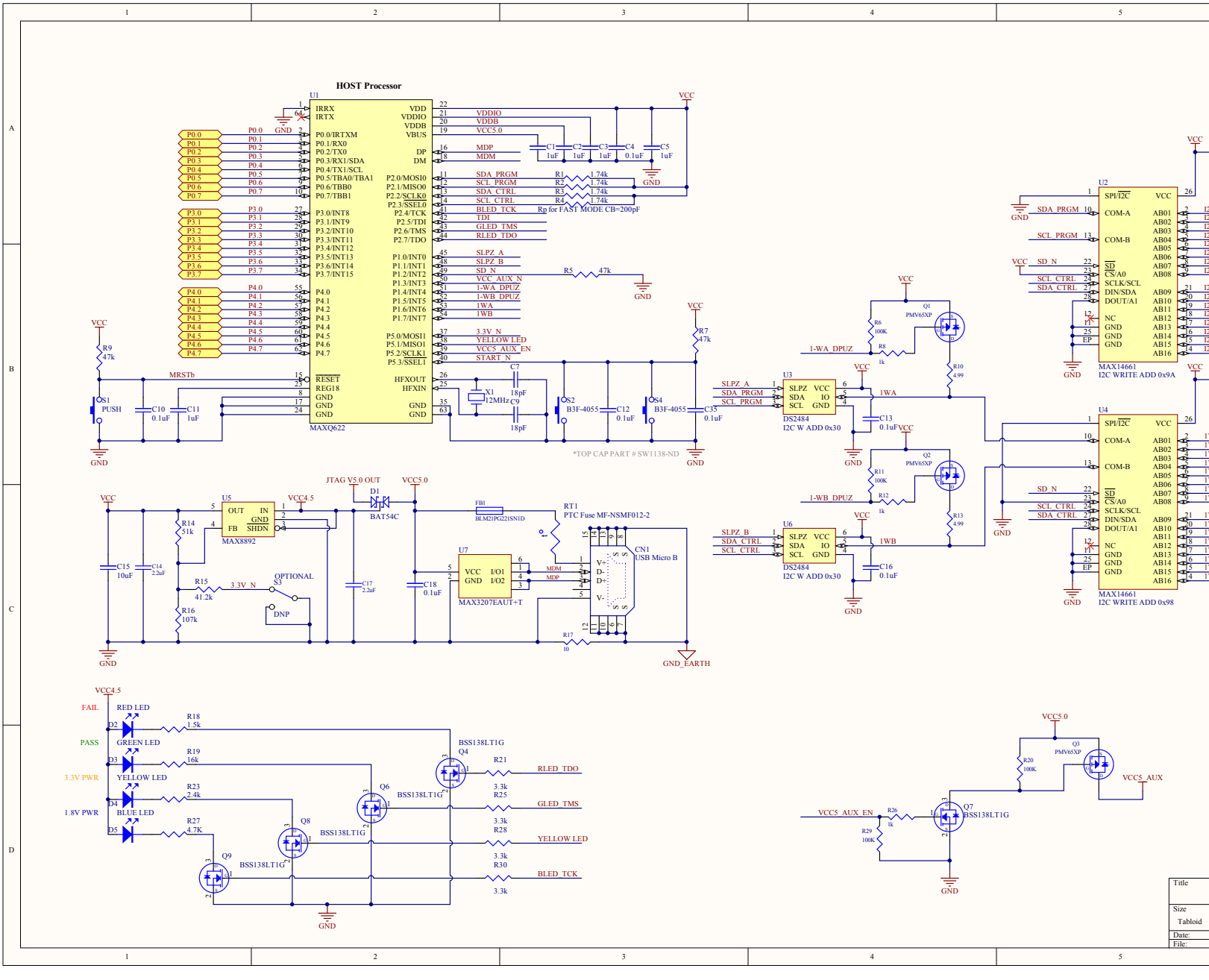
HOST Processor
U1
MAXQ622
IRRX
IRTX
P0.0/IRTXM
P0.1/RX0
P0.2/TX0
P0.3/RX1/SDA
P0.4/TX1/SCL
P0.5/TBA0/TBA1
P0.6/TBB0
P0.7/TBB1
P3.0/INT8
P3.1/INT9
P3.2/INT10
P3.3/INT11
P3.4/INT12
P3.5/INT13
P3.6/INT14
P3.7/INT15
P4.0
P4.1
P4.2
P4.3
P4.4
P4.5
P4.6
P4.7
RESET
REG18
GND
VDD
VDDIO
VDDB
VBUS
DP
DM
P2.0/MOSI0
P2.1/MISO0
P2.2/SCLK0
P2.3/SSEL0
P2.4/TCK
P2.5/TDI
P2.6/TMS
P2.7/TDO
P1.0/INT0
P1.1/INT1
P1.2/INT2
P1.3/INT3
P1.4/INT4
P1.5/INT5
P1.6/INT6
P1.7/INT7
P5.0/MOSI1
P5.1/MISO1
P5.2/SCLK1
P5.3/SSEL1
HFXOUT
HFXIN
VCC
VDDIO
VDDB
VCC5.0
MDP
MDM
SDA_PRGM
SCL_PRGM
SDA_CTRL
SCL_CTRL
BLED_TCK
TDI
GLED_TMS
RLED_TDO
SLPZ_A
SLPZ_B
SD_N
VCC_AUX_N
1-WA_DPUZ
1-WB_DPUZ
1WA
1WB
3.3V_N
YELLOW LED
VCC5_AUX_EN
START_N
Rp for FAST MODE CB=200pF
R1 1.74k
R2 1.74k
R3 1.74k
R4 1.74k
R5 47k
R7 47k
R9 47k
MRSTb
S1 PUSH
C10 0.1uF
C11 1uF
X1 12MHz
C7 18pF
C9 18pF
S2 B3F-4055
C12 0.1uF
S4 B3F-4055
C35 0.1uF
*TOP CAP PART # SW1138-ND
U2
MAX14661
I2C WRITE ADD 0x9A
U4
MAX14661
I2C WRITE ADD 0x98
U3
DS2484
I2C W ADD 0x30
U6
DS2484
I2C W ADD 0x30
Q1 PMV65XP
Q2 PMV65XP
R6 100K
R8 1k
R10 4.99
R11 100K
R12 1k
R13 4.99
C13 0.1uF
C16 0.1uF
U5
MAX8892
OUT
IN
GND
FB
SHDN
VCC4.5
JTAG V5.0 OUT
D1 BAT54C
VCC5.0
FB1 BLM21PG221SN1D
RT1 PTC Fuse MF-NSMF012-2
U7
MAX3207EAUT+T
VCC
I/O1
I/O2
MDM
MDP
CN1 USB Micro B
V+
D-
D+
V-
R17 10
GND_EARTH
C15 10uF
C14 2.2uF
R14 51k
R15 41.2k
R16 107k
3.3V_N
OPTIONAL
S3
DNP
C17 2.2uF
C18 0.1uF
FAIL
PASS
3.3V PWR
1.8V PWR
RED LED
GREEN LED
YELLOW LED
BLUE LED
D2
D3
D4
D5
R18 1.5k
R19 16k
R23 2.4k
R27 4.7K
Q4 BSS138LT1G
Q6 BSS138LT1G
Q8 BSS138LT1G
Q9 BSS138LT1G
R21 3.3k
R25 3.3k
R28 3.3k
R30 3.3k
RLED_TDO
GLED_TMS
YELLOW LED
BLED_TCK
Q3 PMV65XP
R20 100K
VCC5_AUX
VCC5_AUX_EN
R26 1k
R29 100K
Q7 BSS138LT1G
Title
Size
Tabloid
Date:
File:

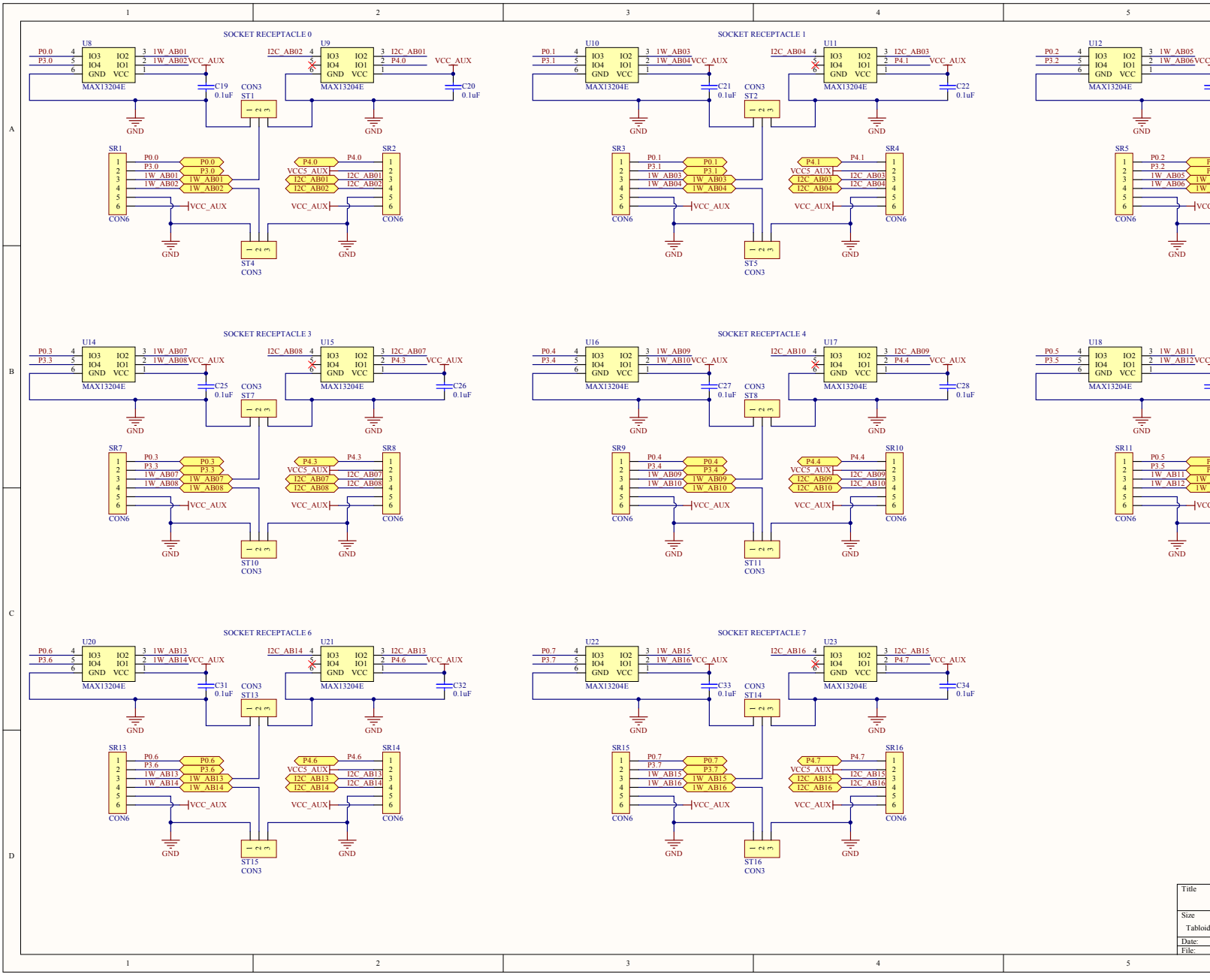

Title	D
Size	Tabloid
Date:	
File:	

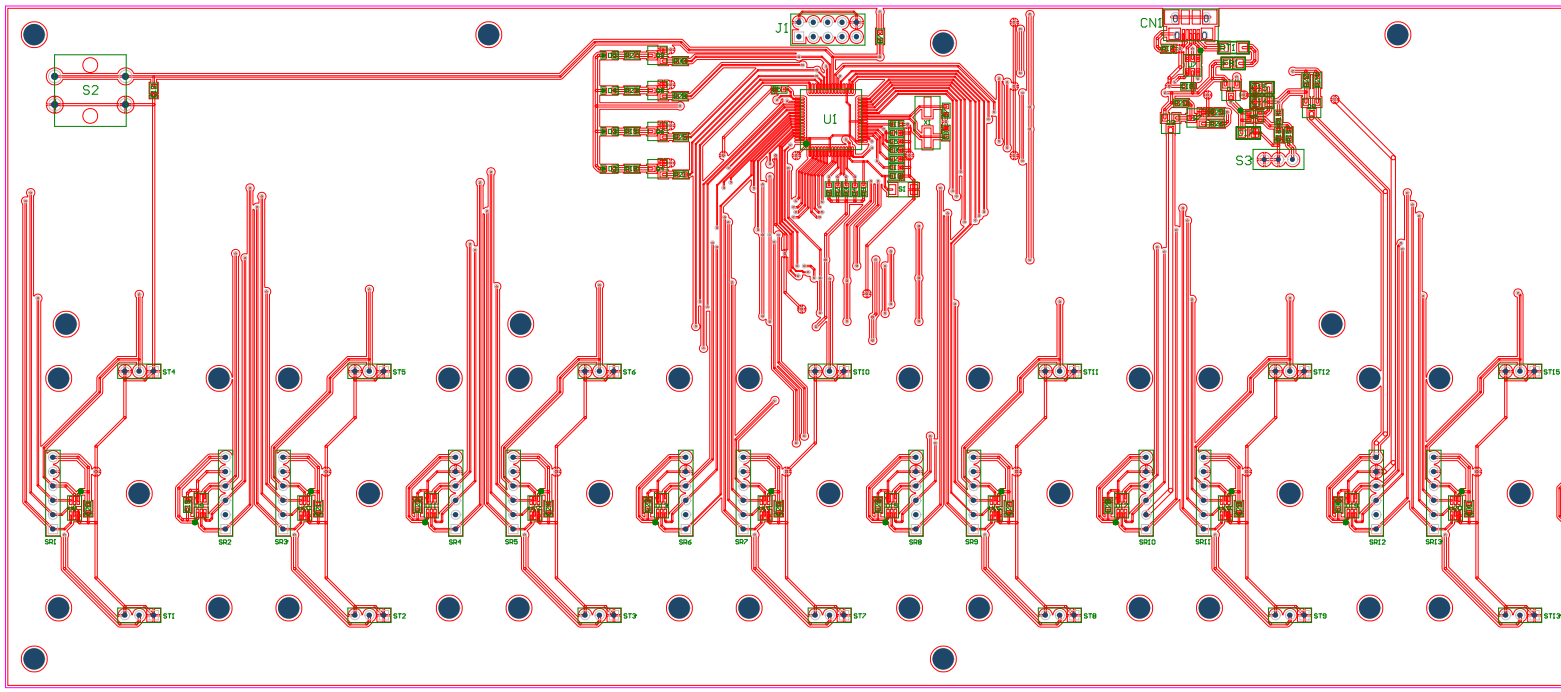

TOP METAL

62mil PCB

TOP ASSEMBLY

DS9488-GP8		
Part Number: 89-94880#000		
Property of maxim integrated		Rev 1
Drill and Mechanical Layer		
Date: JUN 12 2015	Units in mils	

SIZE	QTY	SYM	PLATED	TOLERANCE
12	189	·	YES	+/- 0.003
17	8		YES	+/- 0.003
26	4		YES	+/- 0.003
35	3		YES	+/- 0.003
39	154		YES	+/- 0.003
52	8		YES	+/- 0.003
73	4		NO	+/- 0.003
150	52		NO	+/- 0.003

Notes:

1. Fabricate using
   Of IPC-A-600 un
2. Material: RoHS
3. Board Dimension
4. Board Thickness
5. Layers: 2 (Top,
6. Minimum Trace/S
7. Copper Thickne
8. Surface mount p
9. Soldermask: BLU
10. Legend: White.
11. Plating: Must b
12. Finish: Most Ec
13. Vendor Logo & d
14. Through holes:
15. Tolerances:
    Plated-throu
    Pattern to p
    Legend to le
    Soldermask t
16. Electrical testi

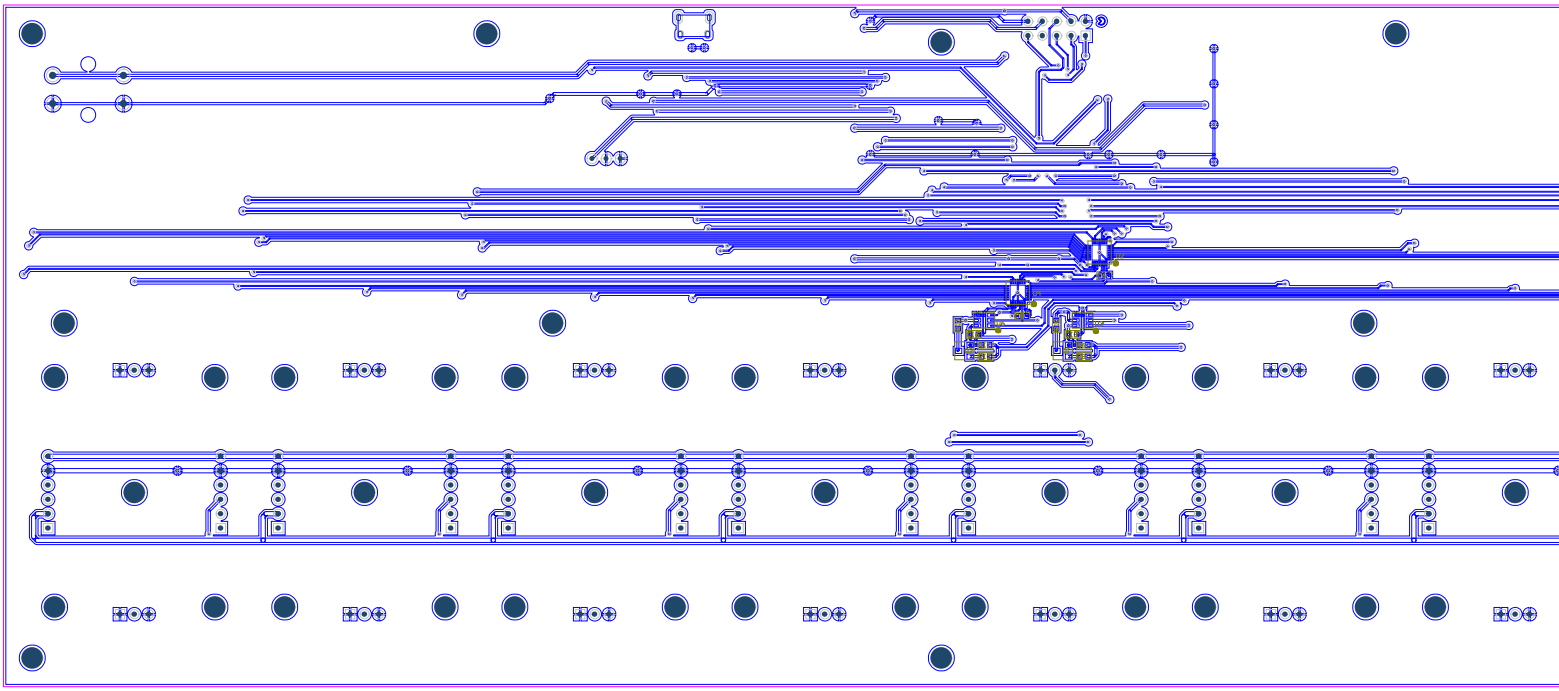

BOTTOM ASSEMBLY

Bottom Metal

62mil PCB

DS9488-GP8	
Part Number: 89-94880#000	
Property of maxim integrated	Rev 1
Drill and Mechanical Layer	
Date: JUN 12 2015	Units in mils

SIZE	QTY	SYM	PLATED	TOLERANCE
12	189	·	YES	+/- 0.003
17	8	·	YES	+/- 0.003
26	4	·	YES	+/- 0.003
35	3	·	YES	+/- 0.003
39	154	+	YES	+/- 0.003
52	8	+	YES	+/- 0.003
73	4	+	NO	+/- 0.003
150	52	+	NO	+/- 0.003

Notes:

1. Fabricate using
   Of IPC-A-600 un
2. Material: RoHS
3. Board Dimension
4. Board Thickness
5. Layers: 2 (Top,
6. Minimum Trace/S
7. Copper Thickness
8. Surface mount p
9. Soldermask: BLU
10. Legend: White.
11. Plating: Must b
12. Finish: Most Ec
13. Vendor Logo & d
14. Through holes:
15. Tolerances:
    Plated-throu
    Pattern to p
    Legend to le
    Soldermask t
16. Electrical testi

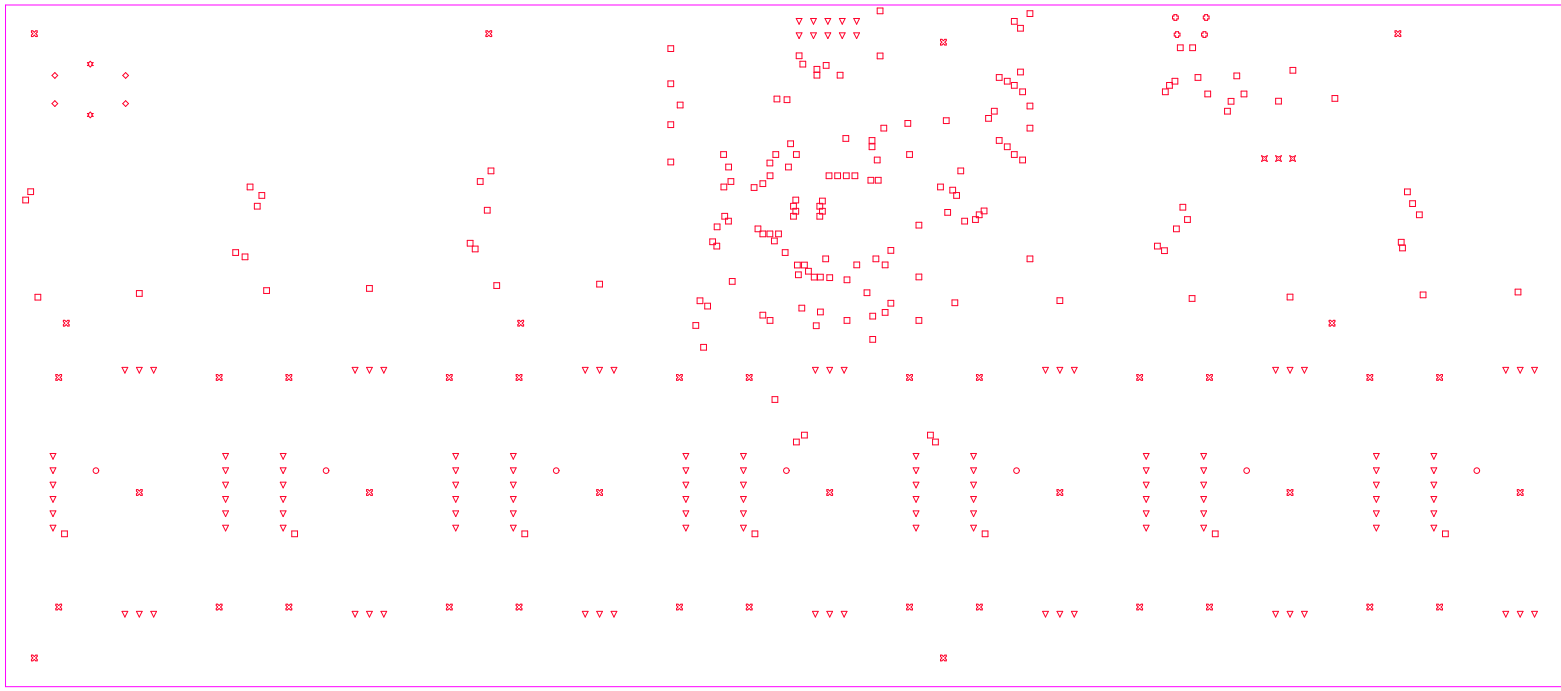

62mil PCB

DS9488-GP8	
Part Number: 89-94880#000	
Property of maxim integrated	Rev 1
Drill and Mechanical Layer	
Date: JUN 12 2015	Units in mils

SIZE	QTY	SYM	PLATED	TOLERANCE
12	189	□	YES	+/- 0.003
17	8	○	YES	+/- 0.003
26	4	✪	YES	+/- 0.003
35	3	⊠	YES	+/- 0.003
39	154	▽	YES	+/- 0.003
52	8	◇	YES	+/- 0.003
73	4	✡	NO	+/- 0.003
150	52	⊠	NO	+/- 0.003

Notes:

1. Fabricate using
   Of IPC-A-600 un
2. Material: RoHS
3. Board Dimension
4. Board Thickness
5. Layers: 2 (Top,
6. Minimum Trace/S
7. Copper Thickness
8. Surface mount p
9. Soldermask: BLU
10. Legend: White.
11. Plating: Must b
12. Finish: Most Ec
13. Vendor Logo & d
14. Through holes:
15. Tolerances:
    Plated-throu
    Pattern to p
    Legend to le
    Soldermask t
16. Electrical testi

DS9122P BILL OF MATERIALS (BOM) Rev 0; 11/15

Designator	Quantity	Description	Manufacture Name	Part Number
C1, C2	2	0.1uF Ceramic Capacitor (0603)	Kemet	C0603C104K8RACTU
D1, D4	2	Red LED (0603)	Lite-On Inc	LTST-C193KRKT-5A
D2, D5	2	Green LED (0603)	Dialight	598-8081-107F
D3, D6	2	Yellow LED (0603)	Wurth Electronics Inc	150060YS75000
JP1, JP2	2	Shunt Jumper		
Q1, Q2, Q3, Q4, Q5, Q6	6	N-Channel MOSFET(SOT-23)	ON Semiconductor	BSS138LT1G
R1, R8	2	1.5kΩ Resistor (0603)	Panasonic Electronic Components	ERJ-3EKF1501V
R2, R9	2	16kΩ Resistor (0603)	Panasonic Electronic Components	ERJ-3EKF1622V
R3, R5, R6, R7, R10, R12, R13, R14	8	3.3kΩ Resistor (0603)	Panasonic Electronic Components	ERJ-3EKF3301V
R4, R11	2	2.4kΩ Resistor (0603)	Vishay Dale	CRCW06032K43FKEA
SR1, SR2, SR3, SR4	4	6 Pin Header	TE Connectivity	9-146285-0
ST1, ST2, ST3, ST4	4	3 Pin Header	TE Connectivity	9-146285-0
U1	1	Dual TSOC6 Clamshell Socket	QSYQ	TSOC-6-2

GANG PROGRAMMER SOCKET SITE REFERENCE

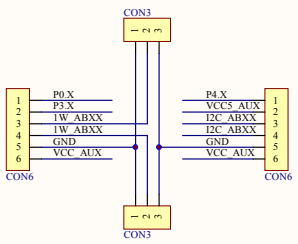

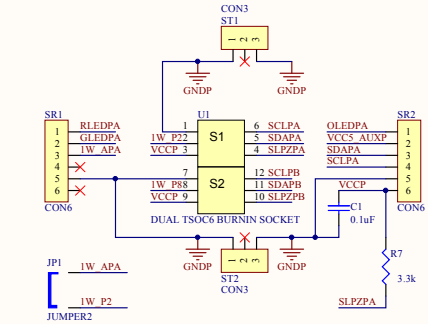

AFFIX JMP FOR DS28EXXX 1W DEVICES
DNP JMP FOR DS24X65 DEVICES

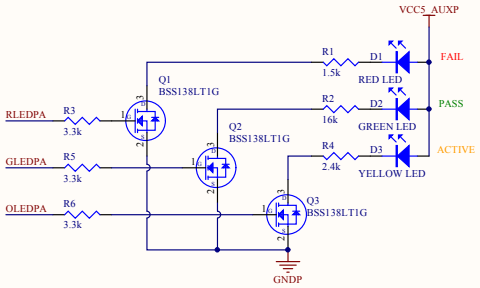

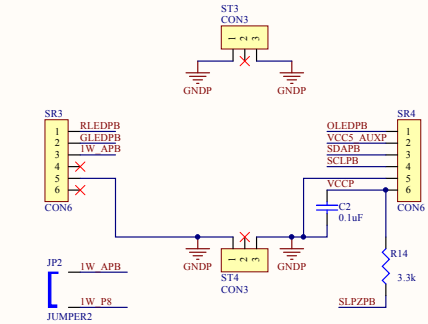

AFFIX JMP FOR DS28EXXX 1W DEVICES
DNP JMP FOR DS24X65 DEVICES

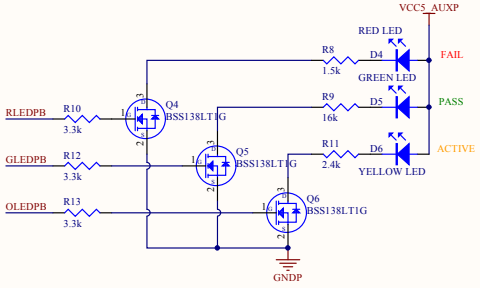

CHIPS SHOWN ARE FOR REFERENCE ONLY

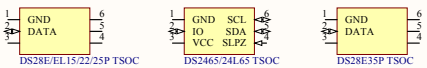

Title	DS
Size	Tabloid
Date:	
File:	

TOP ASSEMBLY

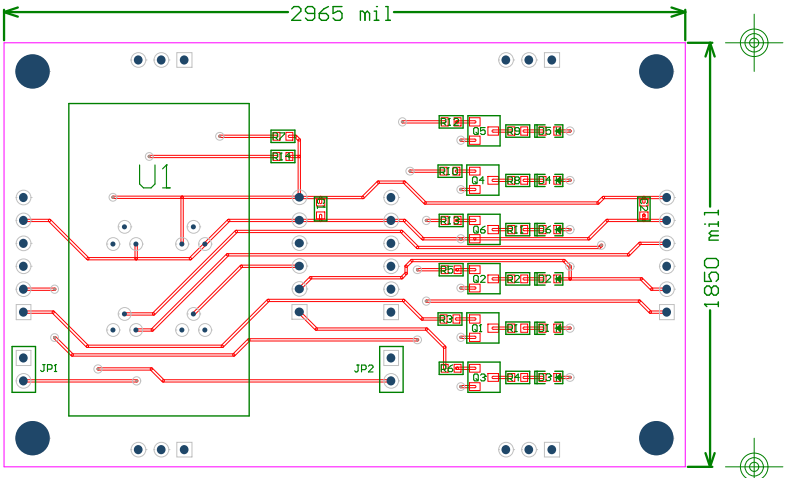

DS9122P				
Part Number: 89-9122P#002				
Property of maxim integrated™				Rev 1
Drill and Mechanical Layer				
Date: JUN 12 2015			Units in mils	

SIZE	QTY	SYM	PLATED	TOLERANCE
13	22	•	YES	+/- 0.003
22	12		YES	+/- 0.003
39	40		YES	+/- 0.003
150	4		NO	+/- 0.003

Notes:

1. Fabricate using provided ger
   Of IPC-A-600 unless otherwis
2. Material: RoHS Compliant FR-
3. Board Dimensions: (2965 x 18
4. Board Thickness: 62 mils +/-
5. Layers: 2 (Top, Bottom)
6. Minimum Trace/Spacing: 10mil
7. Copper Thickness: 1oz on all
8. Surface mount pads: 62
9. Soldermask: BLUE
10. Legend: White. Double-Sided.
11. Plating: Must be Lead free a
12. Finish: Most Economical Lead
13. Vendor Logo & date code: All
14. Through holes: quantity 78,
15. Tolerances:
    - Plated-through holes +
    - Pattern to pattern +
    - Legend to legend n
    - Soldermask to pattern +
16. Electrical testing needed: YE

TOP METAL

62mil PCB

BOTTOM ASSEMBLY

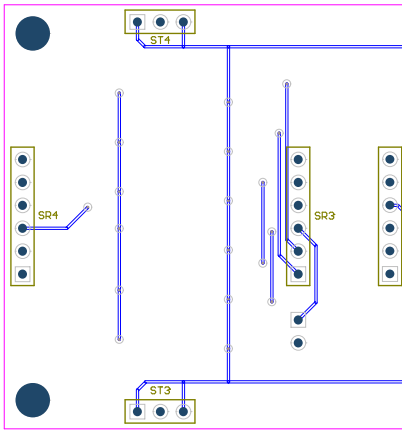

Bottom Metal

Bottom Metal

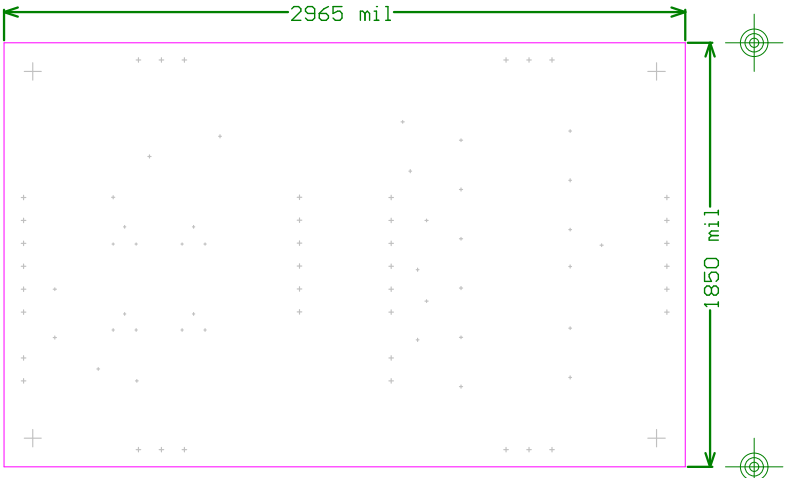

DS9122P				
Part Number: 89-9122P#002				
Property of maxim integrated™				Rev 1
Drill and Mechanical Layer				
Date: JUN 12 2015			Units in mils	

SIZE	QTY	SYM	PLATED	TOLERANCE
13	22	·	YES	+/- 0.003
22	12	·	YES	+/- 0.003
39	40	+	YES	+/- 0.003
150	4	⊕	NO	+/- 0.003

Notes:

1. Fabricate using provided ger
   Of IPC-A-600 unless otherwis
2. Material: RoHS Compliant FR-
3. Board Dimensions: (2965 x 18
4. Board Thickness: 62 mils +/-
5. Layers: 2 (Top, Bottom)
6. Minimum Trace/Spacing: 10mil
7. Copper Thickness: 1oz on all
8. Surface mount pads: 62
9. Soldermask: BLUE
10. Legend: White. Double-Sided.
11. Plating: Must be Lead free a
12. Finish: Most Economical Lead
13. Vendor Logo & date code: All
14. Through holes: quantity 78,
15. Tolerances:
    - Plated-through holes +
    - Pattern to pattern +
    - Legend to legend n
    - Soldermask to pattern +
16. Electrical testing needed: YE

62mil PCB

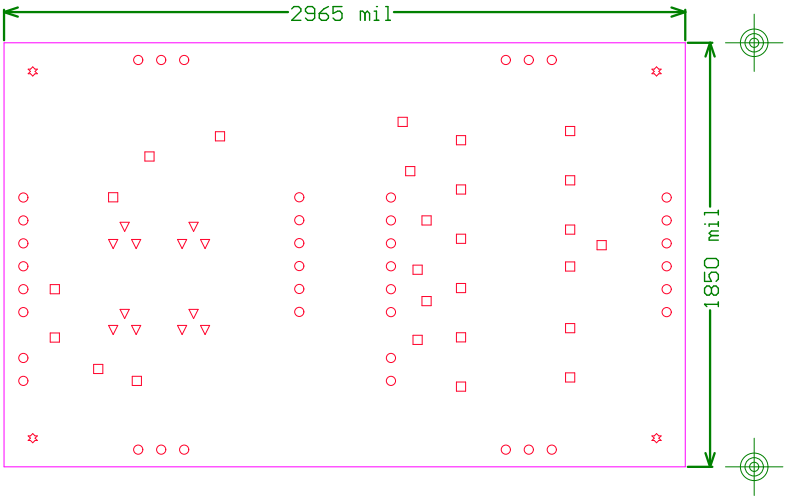

DS9122P				
Part Number: 89-9122P#002				
Property of maxim integrated™				Rev 1
Drill and Mechanical Layer				
Date: JUN 12 2015			Units in mils	

SIZE	QTY	SYM	PLATED	TOLERANCE
13	22	□	YES	+/- 0.003
22	12	▽	YES	+/- 0.003
39	40	○	YES	+/- 0.003
150	4	☼	NO	+/- 0.003

Notes:

1. Fabricate using provided ger
   Of IPC-A-600 unless otherwis
2. Material: RoHS Compliant FR-
3. Board Dimensions: (2965 x 18
4. Board Thickness: 62 mils +/-
5. Layers: 2 (Top, Bottom)
6. Minimum Trace/Spacing: 10mil
7. Copper Thickness: 1oz on all
8. Surface mount pads: 62
9. Soldermask: BLUE
10. Legend: White. Double-Sided.
11. Plating: Must be Lead free a
12. Finish: Most Economical Lead
13. Vendor Logo & date code: All
14. Through holes: quantity 78,
15. Tolerances:
    - Plated-through holes +
    - Pattern to pattern +
    - Legend to legend no
    - Soldermask to pattern +
16. Electrical testing needed: YE

62mil PCB

DS9122Q BILL OF MATERIALS (BOM) Rev 0; 11/15

Designator	Quantity	Description	Manufacture Name	Part Number
D1	1	Red LED (0603)	Lite-On Inc	LTST-C193KRKT-5A
D2	1	Green LED (0603)	Dialight	598-8081-107F
D3	1	Yellow LED (0603)	Wurth Electronics Inc	150060YS75000
Q1, Q2, Q3	3	N-Channel MOSFET(SOT-23)	ON SEMICONDUCTOR	BSS138LT1G
R1	1	1.5kΩ Resistor (0603)	Panasonic Electronic Co	ERJ-3EKF1501V
R2	1	16kΩ Resistor (0603)	Panasonic Electronic Co	ERJ-3EKF1622V
R3, R5, R6	3	3.3kΩ Resistor (0603)	Panasonic Electronic Co	ERJ-3EKF3301V
R4	1	2.4kΩ Resistor (0603)	Vishay Dale	CRCW06032K43FKEA
SR1, SR2	2	6 Pin Header	TE Connectivity	9-146285-0
ST1, ST2	2	3 Pin Header	TE Connectivity	9-146285-0
U1	1	TDFN Clamshell Socket	PLASTRONICS	06QN10T23030

GANG PROGRAMMER SOCKET SITE REFERENCE

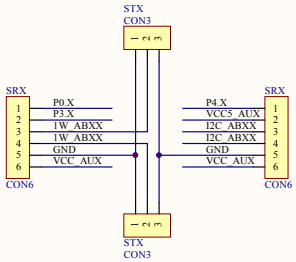

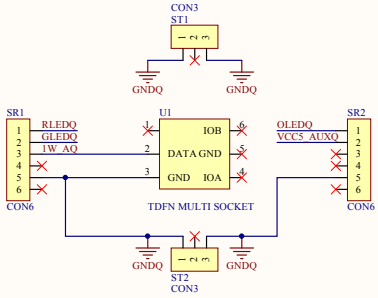

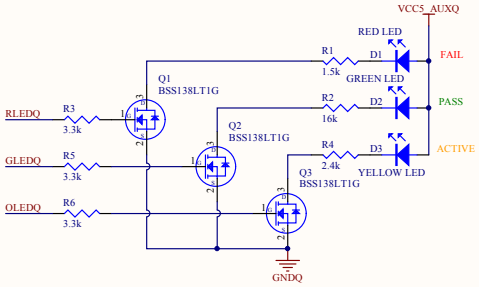

CHIPS SHOWN ARE FOR REFERENCE ONLY

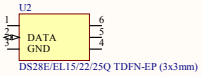

Title	
Size	Tabloid
Date:	
File:	

TOP ASSEMBLY

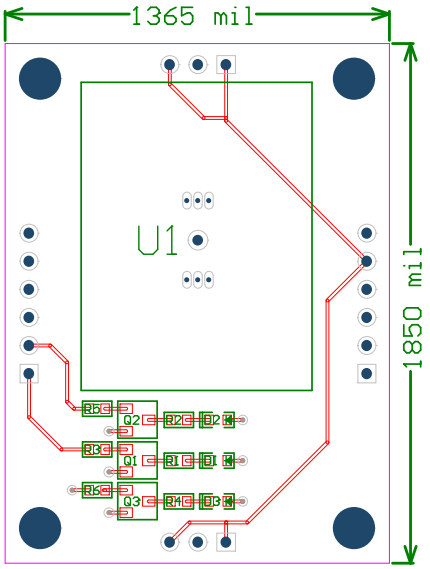

DS9122Q				
Part Number: 89-9122Q#000				
Property of maxim integrated™				Rev 1
Drill and Mechanical Layer				
Date: NOV 19 2014			Units in mils	

SIZE	QTY	SYM	PLATED	TOLERANCE
18	13	•	YES	+/- 0.003
39	19		YES	+/- 0.003
59	1		NO	+/- 0.003
66	1		NO	+/- 0.003
150	4		NO	+/- 0.003

Notes:

1. Fabricate using provided gerber fil
   Of IPC-A-600 unless otherwise noted
2. Material: RoHS Compliant FR-408 or
3. Board Dimensions: (1365 x 1850 mils
4. Board Thickness: 62 mils +/- 10%
5. Layers: 2 (Top, Bottom)
6. Minimum Trace/Spacing: 10mil / 7mil
7. Copper Thickness: 1oz on all layers
8. Surface mount pads: 27
9. Soldermask: BLUE
10. Legend: White. Double-Sided. Non-Co
11. Plating: Must be Lead free and RoHS
12. Finish: Most Economical Lead free a
13. Vendor Logo & date code: Allowed o
14. Through holes: quantity 38, Slot ho
15. Tolerances:
    - Plated-through holes +/- 3 mi
    - Pattern to pattern +/- 6 mi
    - Legend to legend no prefe
    - Soldermask to pattern +/- 6 mi
16. Electrical testing needed: YES

TOP METAL

62mil PCB

BOTTOM ASS

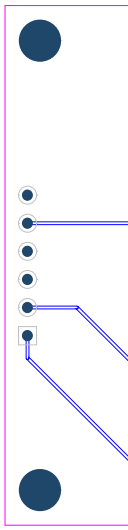

Bottom Metal

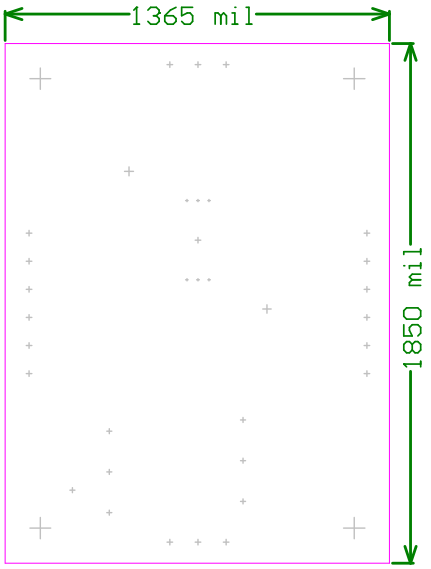

DS9122Q		
Part Number: 89-9122Q#000		
Property of maxim integrated™		Rev 1
Drill and Mechanical Layer		
Date: NOV 19 2014	Units in mils	

SIZE	QTY	SYM	PLATED	TOLERANCE
18	13	+	YES	+/- 0.003
39	19	+	YES	+/- 0.003
59	1	+	NO	+/- 0.003
66	1	+	NO	+/- 0.003
150	4	+	NO	+/- 0.003

Notes:

1. Fabricate using provided gerber fil
   Of IPC-A-600 unless otherwise noted
2. Material: RoHS Compliant FR-408 or
3. Board Dimensions: (1365 x 1850 mils
4. Board Thickness: 62 mils +/- 10%
5. Layers: 2 (Top, Bottom)
6. Minimum Trace/Spacing: 10mil / 7mil
7. Copper Thickness: 1oz on all layers
8. Surface mount pads: 27
9. Soldermask: BLUE
10. Legend: White. Double-Sided. Non-Co
11. Plating: Must be Lead free and RoHS
12. Finish: Most Economical Lead free a
13. Vendor Logo & date code: Allowed o
14. Through holes: quantity 38, Slot ho
15. Tolerances:
    - Plated-through holes +/- 3 mi
    - Pattern to pattern +/- 6 mi
    - Legend to legend no prefe
    - Soldermask to pattern +/- 6 mi
16. Electrical testing needed: YES

62mil PCB

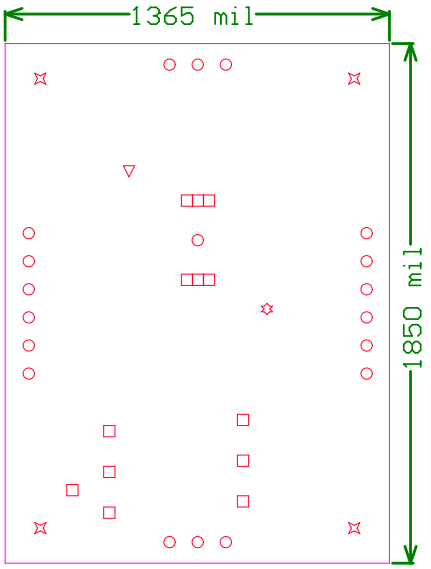

DS9122Q				
Part Number: 89-9122Q#000				
Property of maxim integrated™				Rev 1
Drill and Mechanical Layer				
Date: NOV 19 2014			Units in mils	

SIZE	QTY	SYM	PLATED	TOLERANCE
18	13	□	YES	+/- 0.003
39	19	○	YES	+/- 0.003
59	1	✡	NO	+/- 0.003
66	1	▽	NO	+/- 0.003
150	4	⌑	NO	+/- 0.003

Notes:

1. Fabricate using provided gerber fil
   Of IPC-A-600 unless otherwise noted
2. Material: RoHS Compliant FR-408 or
3. Board Dimensions: (1365 x 1850 mils
4. Board Thickness: 62 mils +/- 10%
5. Layers: 2 (Top, Bottom)
6. Minimum Trace/Spacing: 10mil / 7mil
7. Copper Thickness: 1oz on all layers
8. Surface mount pads: 27
9. Soldermask: BLUE
10. Legend: White. Double-Sided. Non-Co
11. Plating: Must be Lead free and RoHS
12. Finish: Most Economical Lead free a
13. Vendor Logo & date code: Allowed o
14. Through holes: quantity 38, Slot ho
15. Tolerances:
    - Plated-through holes +/- 3 mi
    - Pattern to pattern +/- 6 mi
    - Legend to legend no prefe
    - Soldermask to pattern +/- 6 mi
16. Electrical testing needed: YES

62mil PCB

X-ON Electronics

Largest Supplier of Electrical and Electronic Components

Click to view similar products for Programmers - Universal & Memory Based ***category:***

Click to view products by Maxim ***manufacturer:***

Other Similar products are found below :

DG-ACC-LX-DVD DSC-PROG-TIMEFLASH-2520 4D-UPA DC1508B-A DC1709A AS5XXX-EK-USB-PB CT002-S UMFT4222PROG-IC PDS4102-PM300N SUPERPRO 6100N SUPERPRO 610P AS5000 PROGRAMMER 844USB 866C CHIPMAX2 PROMAX 2 -4G TOPMAX III UMFT4222PROG