MIC5281

120V_{IN}, 25mA, Ultra-Low IQ, High-PSRR Linear Regulator

General Description

The MIC5281 high-performance linear regulator offers a very-wide input operating voltage range, up to 120V DC, and supplies an output current of up to 25mA.

Ideal for high input voltage applications such as industrial and telecom, the MIC5281 offers ±3% initial accuracy, extremely high-power supply rejection ratio (>90db) and ultra-low quiescent current of 6µA. The MIC5281 is optimized for high-voltage line transients, making it ideal for harsh environment applications.

The MIC5281 is offered in both fixed output voltage (3.3V/5.0V) and adjustable output voltage (1.27V to 5.5V) options.

The MIC5281 operates over a –40ºC to +125ºC temperature range and is available in lead-free, RoHS-compliant, 8-pin ePad MSOP, and 8-pin MSOP packages

Datasheets and support documentation are available on Micrel's web site at: www.micrel.com.

Features

- Wide input voltage range: 6V to 120V DC
- Ultra-low quiescent current: 6µA
- 25mA guaranteed output current
- Adjustable output from 1.27V to 5.5V
- Withstands up to +120V DC at the input
- Stable with ceramic capacitors
- Ultra-high PSRR >90dB
- Ultra-high line rejection (load dump)
- High output accuracy:
  - ±3% initial accuracy
- Thermal-shutdown and current-limit protection:
  - Thermally-efficient, 8-pin MSOP, and 8-pin ePad MSOP packages

Applications

- Industrial applications
- Remote keyless entry power supply
- Telecom applications
- Off-line power supplies

Typical Application

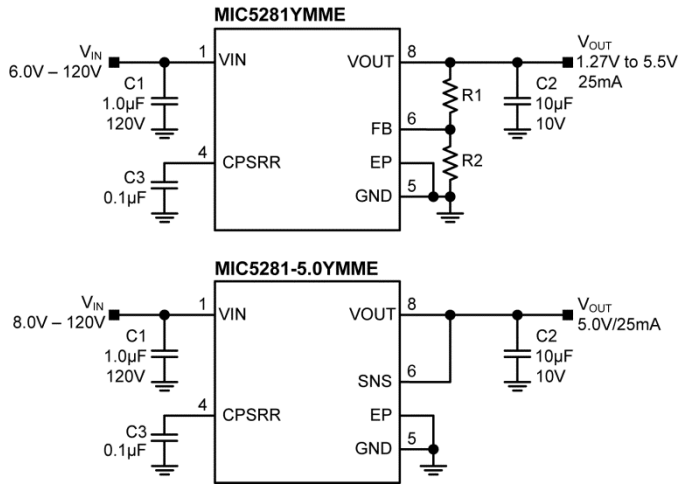

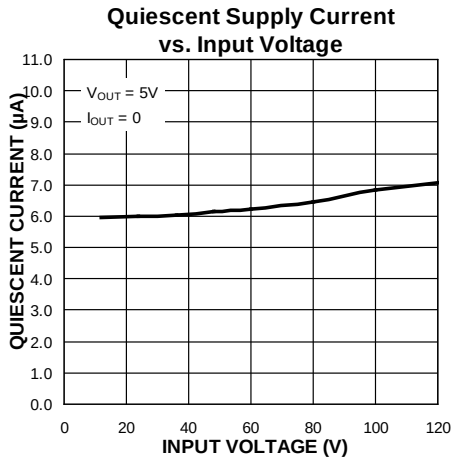

Ordering Information

Part Number	Output Voltage	Top Mark	Temperature Range	Package	Lead Finish
MIC5281YMME	Adjustable	781A	–40°C to +125°C	8-Pin ePad MSOP	Pb-Free
MIC5281-3.3YMME	3.3V	781S	–40°C to +125°C	8-Pin ePad MSOP	Pb-Free
MIC5281-5.0YMME	5.0V	7815	–40°C to +125°C	8-Pin ePad MSOP	Pb-Free
MIC5281YMM	Adjustable	5281 YMM	–40°C to +125°C	8-Pin MSOP	Pb-Free
MIC5281-3.3YMM	3.3V	5281 3.3Y	–40°C to +125°C	8-Pin MSOP	Pb-Free
MIC5281-5.0YMM	5.0V	5281 5.0Y	–40°C to +125°C	8-Pin MSOP	Pb-Free

Pin Configuration

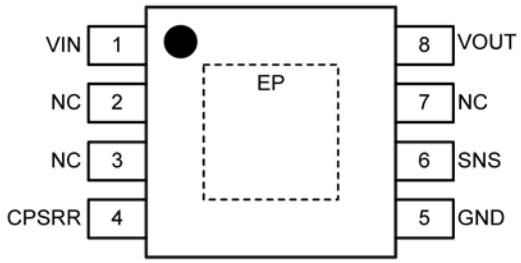

8-Pin ePAD MSOP
MIC5281-x.xYMME

(TOP VIEW)

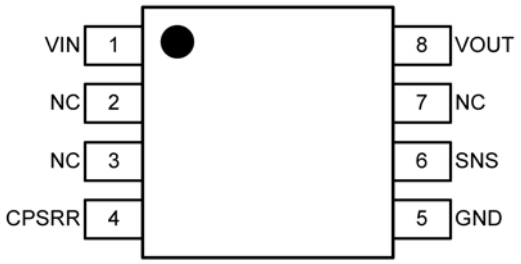

8-Pin MSOP
MIC5281-x.xYMM

(TOP VIEW)

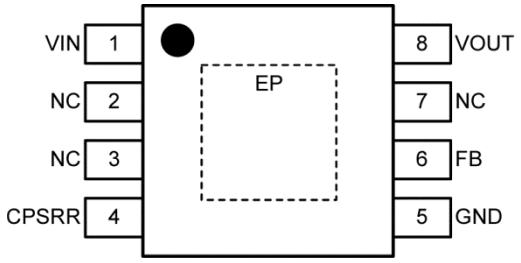

8-Pin ePAD MSOP
MIC5281YMME

(TOP VIEW)

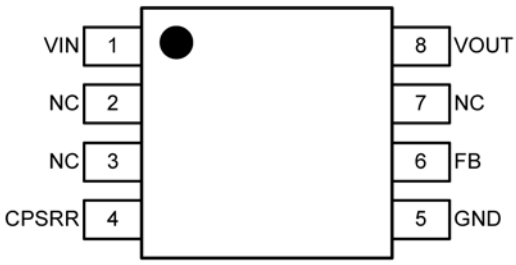

8-Pin MSOP
MIC5281YMM

(TOP VIEW)

Pin Description

Pin				Name	Function
MIC5281YMME	**MIC5281-x.xYMME**	**MIC5281YMM**	**MIC5281-x.xYMM**		
1	1	1	1	VIN	Supply Voltage Input. Connect 1µF capacitor from VIN to GND.
2, 3, 7	2, 3, 7	2, 3, 7	2, 3, 7	NC	Not internally connected. Connect NC to GND or leave unconnected.
4	4	4	4	CPSRR	Bypass Capacitor Connection. Connect 0.1µF capacitor from CPSRR to GND.
5	5	5	5	GND	Ground.
6	–	6	–	FB	Feedback Connection. For external resistor divider to set V_{OUT}.
–	6	–	6	SNS	Sense input. Connect SNS to VOUT.
8	8	8	8	VOUT	Regulator Output. Connect 10µF capacitor from VOUT to GND.
EP	EP	–	–	EP	Exposed Pad (ePad) for Thermal Relief. Connect EP to GND.

Absolute Maximum Ratings[1]

V_{IN} to GND ..... –0.3V to +125V
V_{CPSRR} to GND ..... –0.3 to +14V
V_{FB}, V_{SNS}, V_{OUT} to GND ..... –0.3V to +6V
Lead Temperature (soldering, 10s) ..... +260°C
Junction Temperature ..... –40°C ≤ T_J ≤ +125°C
Storage Temperature ..... –65°C ≤ T_A ≤ +150°C
ESD Ratings[4]
HBM 2kV
MM 200V

Operating Ratings[2]

V_{IN} ..... +6V to +120V
V_{OUT} Adjust Range ..... +1.27V to +5.5V
Junction Temperature ..... –40°C ≤ T_J ≤ +125°C
Power Dissipation (P_D) ..... Internally Limited[3]
Junction Thermal Resistance (θ_{JA})
8-pin ePad MSOP ..... 64°C/W
8-pin MSOP ..... 160°C/W

Electrical Characteristics[5]

V_{IN} = 12V, C_{IN} = 1.0µF, C_{PSRR} = 0.1µF, C_{OUT} = 10µF, V_{OUT} = 5.0V or 3.3V, I_{OUT} = 100µA, T_A = 25°C, **bold** values indicate –40°C ≤ T_J ≤ +125°C, unless noted.

Parameter	Condition	Min.	Typ.	Max.	Units
Power Supply Input					
Input Voltage Range[6]		6		120	V
Quiescent Supply Current	I_{OUT} = 0		6	**11**	µA
Output Voltage					
Output Voltage	Adjustable	1.27		5.5	V
	Fixed 3.3V	3.2	3.3	3.4	
		3.13	3.3	**3.47**	
	Fixed 5.0V	4.85	5.0	5.15	
		4.75	5.0	**5.25**	
Output Voltage Accuracy	Variation from nominal V_{OUT}	–3		+3	%
		–5		**+5**	%
Load Regulation	I_{OUT} = 100µA to 25mA	**–1.0**	0.2	**+1.0**	%
Line Regulation[7]	V_{IN} = 10V to 120V	**–0.5**	0.04	**+0.5**	%
Feedback Input (Adjustable)					
FB Voltage		1.232	1.270	1.308	V
		1.206	1.270	**1.333**	
FB Current	V_{FB} = 1.27V		3.2		nA
Current Limit					
Current Limit	V_{OUT} = 0V	**30**	65	**130**	mA
Ripple Rejection					
Power Supply Rejection Ratio	f = 20kHz to 2MHz		90		dB

Notes:

1. Exceeding an absolute maximum rating may damage the device.
2. The device is not guaranteed to function outside its operating rating.
3. The maximum allowable power dissipation at any T_A (ambient temperature) is $P_{D(max)} = (T_{J(max)} – T_A) / \theta_{JA}$. Exceeding the maximum allowable power dissipation results in excessive die temperature, and causes the regulator to enter thermal shutdown.
4. Devices are ESD sensitive; use proper handling precautions. Human body model, 1.5kΩ in series with 100pF.
5. Specifications are for packaged products only.
6. Assure that $V_{IN} \geq (V_{OUT} + 3V)$ and $V_{IN} \geq 6V$.
7. Line regulation is a percentage of V_{OUT}.

Electrical Characteristics[5] (Continued)

V_{IN} = 12V, C_{IN} = 1.0µF, C_{PSRR} = 0.1µF, C_{OUT} = 10µF, V_{OUT} = 5.0V or 3.3V, I_{OUT} = 100µA, T_A = 25°C, **bold** values indicate –40°C ≤ T_J ≤ +125°C, unless noted.

Parameter	Condition	Min.	Typ.	Max.	Units
Power Dropout Voltage					
Dropout Voltage	I_{OUT} = 25mA		2	**3**	V
Thermal Protection					
Thermal-Shutdown Temperature	T_J rising		157		°C
Thermal-Shutdown Hysteresis			15		°C

Typical Characteristics

Quiescent Supply Current vs. Input Voltage

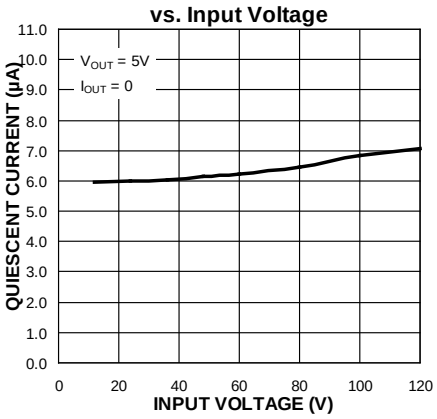

Quiescent Supply Current vs. Temperature

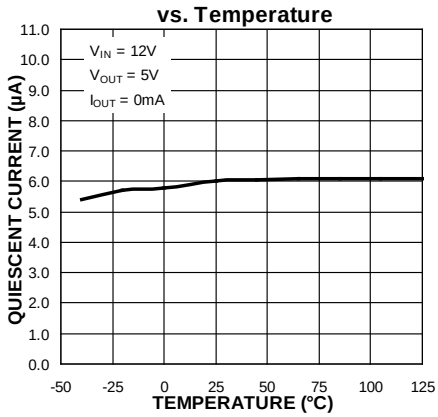

Output Voltage vs. Input Voltage

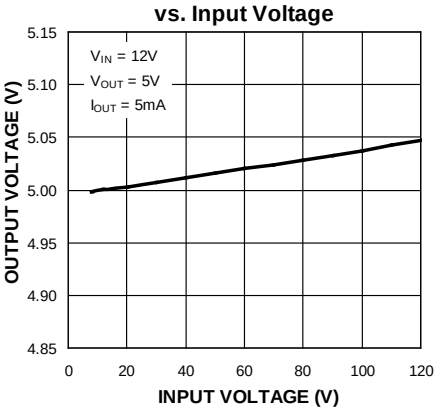

Output Voltage vs. Output Current

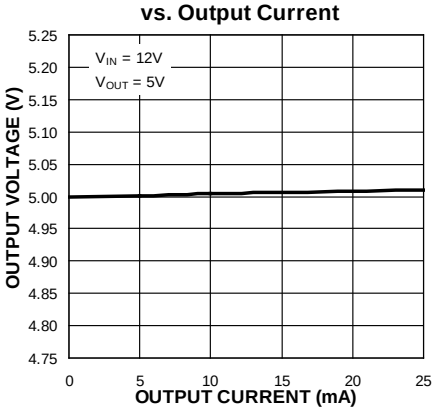

Output Voltage vs. Temperature

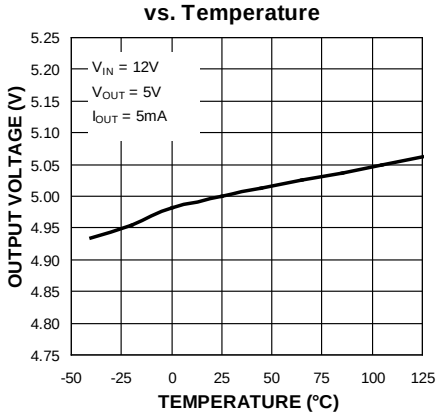

Dropout Voltage vs. Output Current

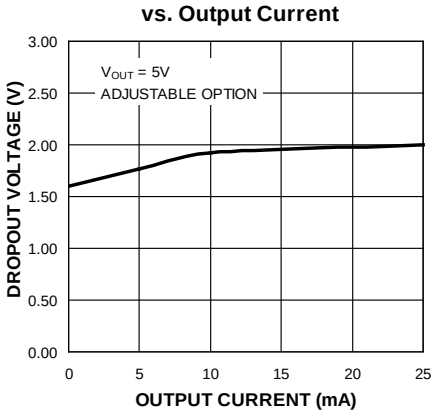

Dropout Voltage vs. Temperature

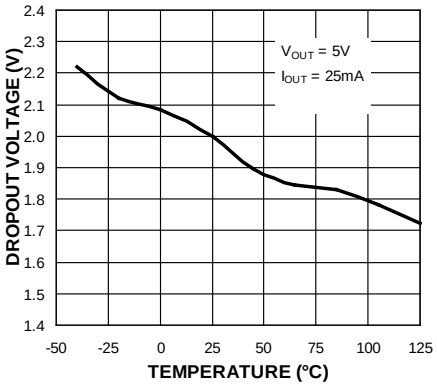

FB Voltage vs. Input Voltage

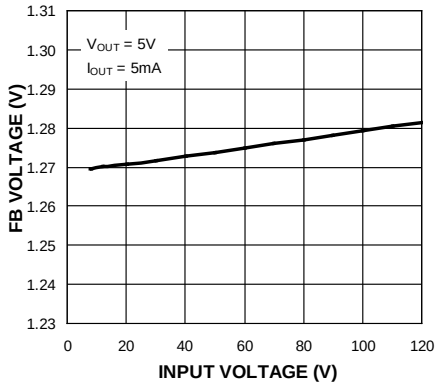

FB Current vs. Input Voltage

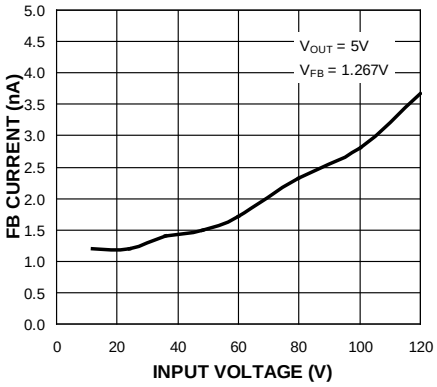

Typical Characteristics (Continued)

FB Voltage vs. Temperature

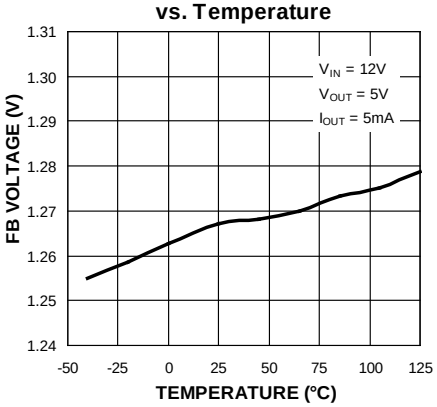

FB Current vs. Temperature

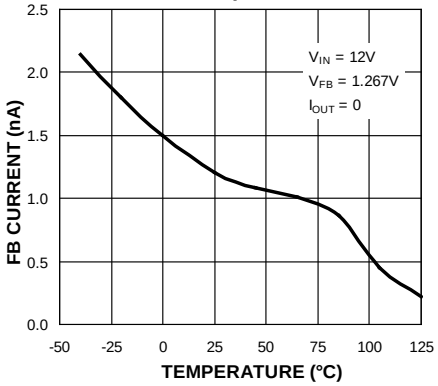

FB Voltage vs. Output Current

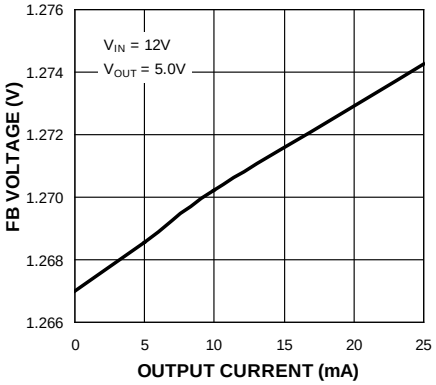

Current Limit vs. Temperature

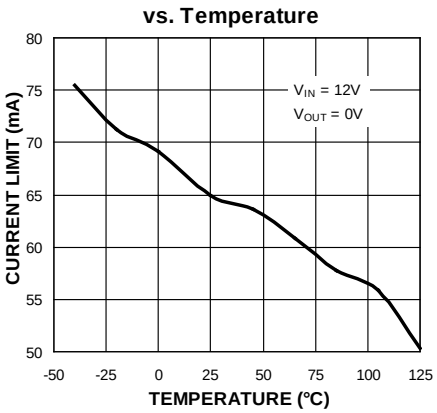

Line Regulation vs. Temperature

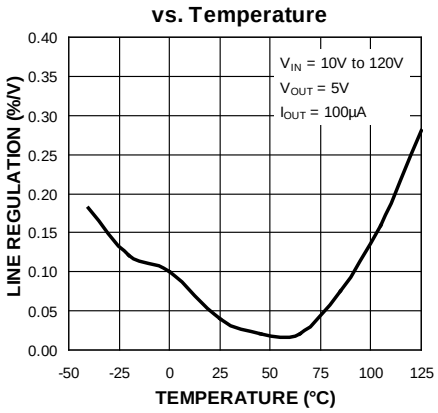

Load Regulation vs. Temperature

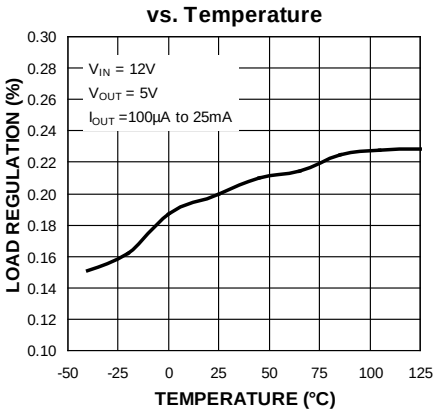

Power Dissipation vs. Output Current

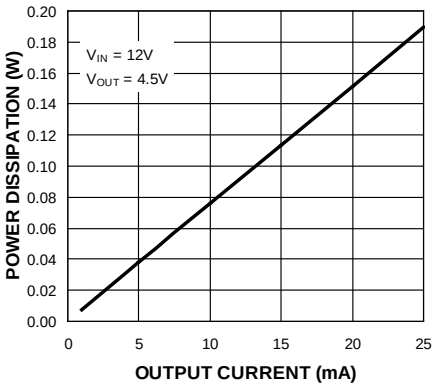

Case Temperature (MME) vs. Output Current

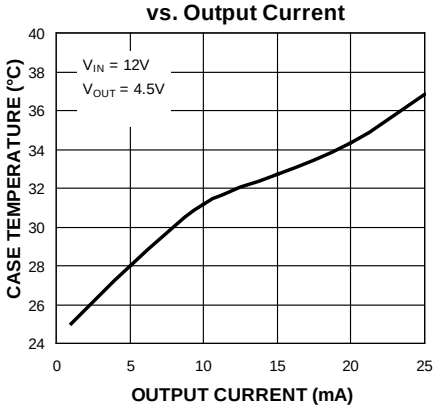

PSRR vs. Frequency

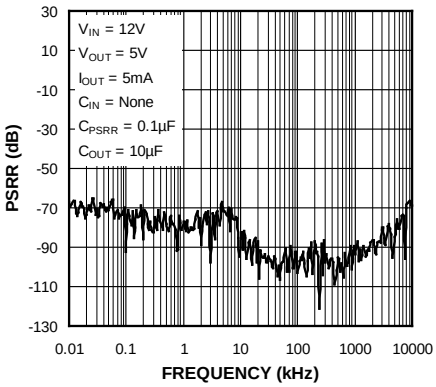

Functional Characteristics

Soft Turn-On into Full Load

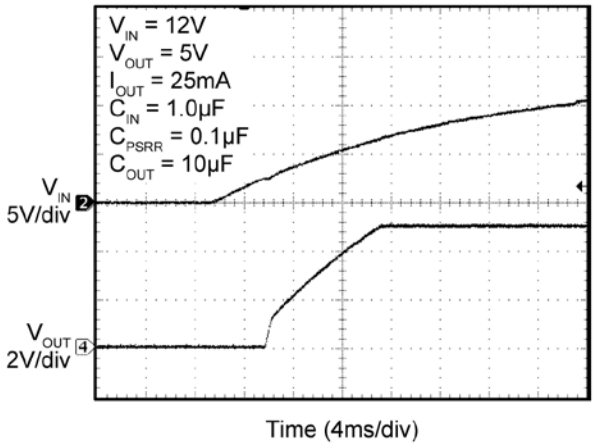

Soft Turn-Off

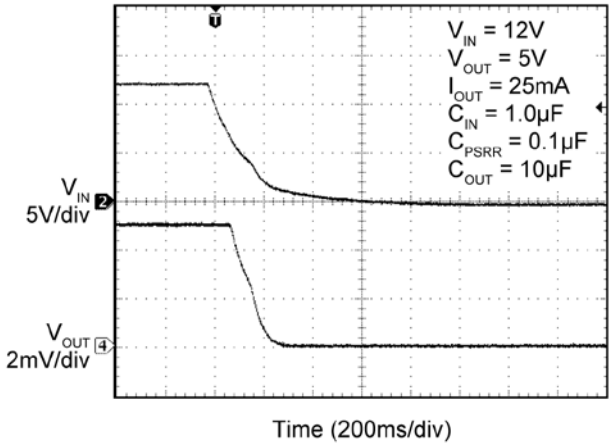

Hot Plug

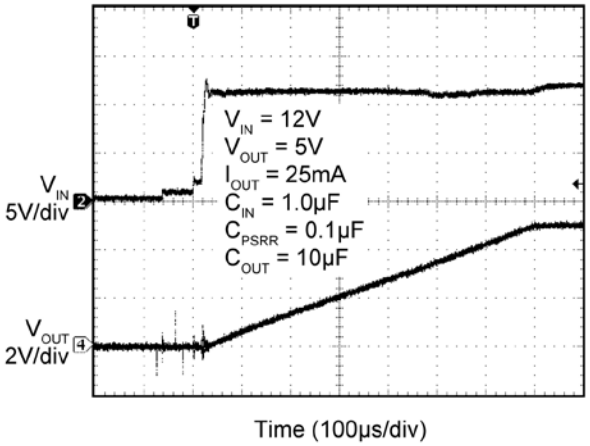

Hot Un-Plug

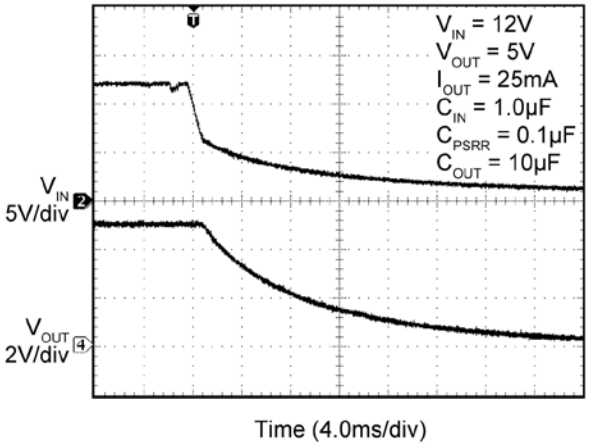

Turn-On and Turn-Off

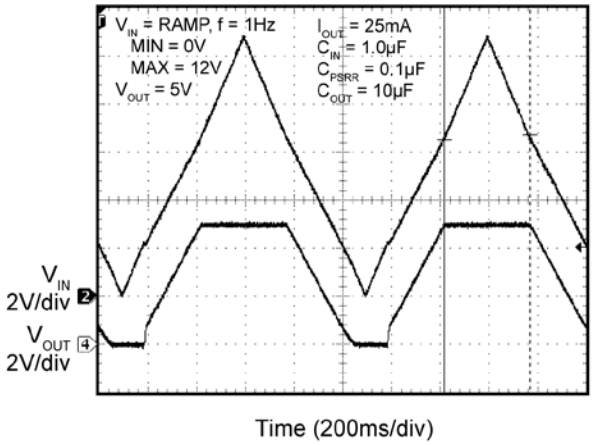

Current Limit

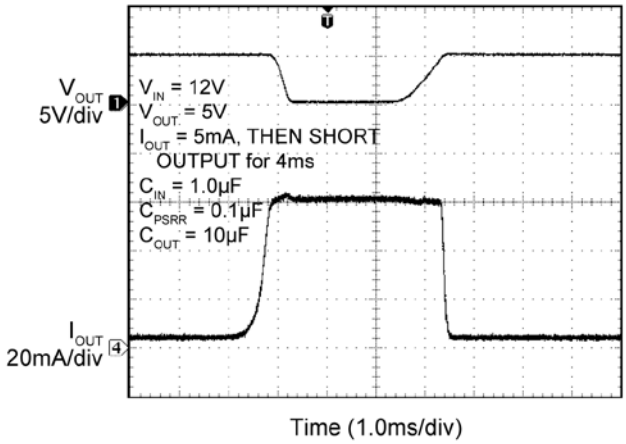

Functional Characteristics (Continued)

Thermal Shutdown, Short Circuit

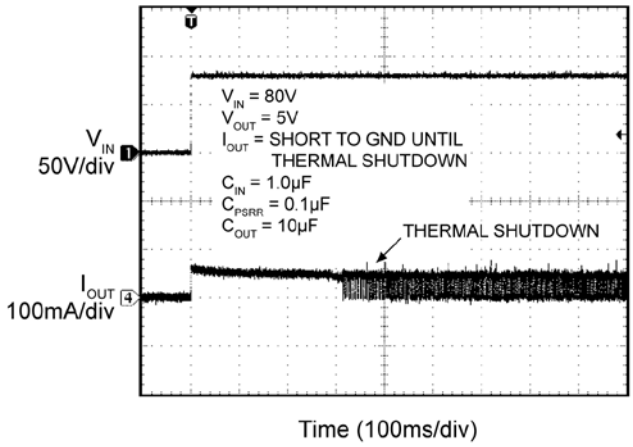

Turn-On into Short Circuit

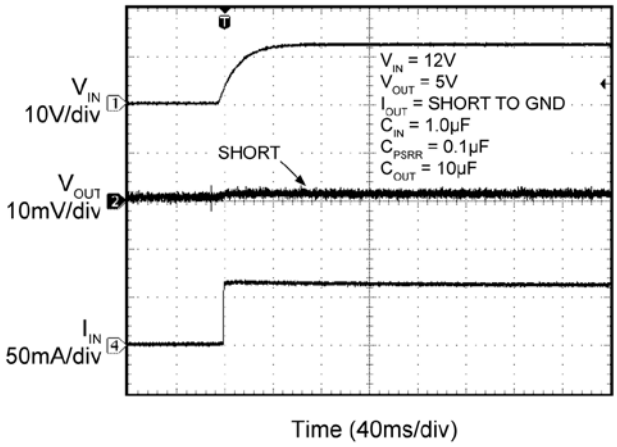

Short-Circuit Response

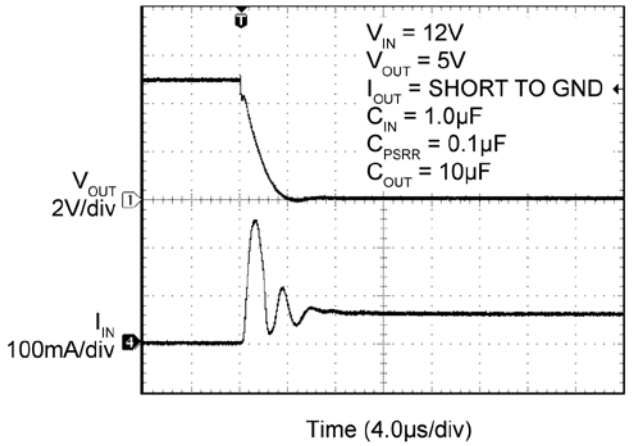

Short-Circuit Output Voltage Recovery

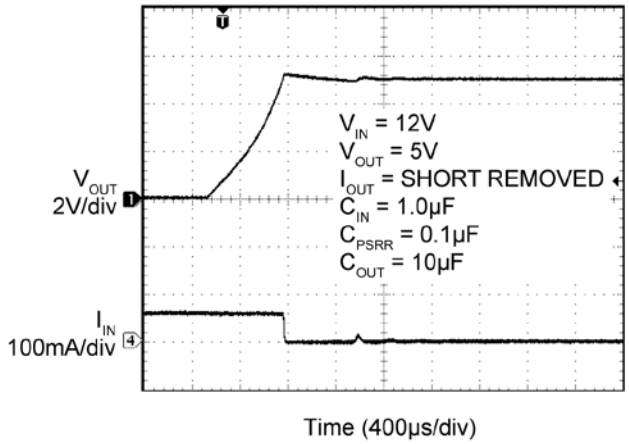

Load Transient Response

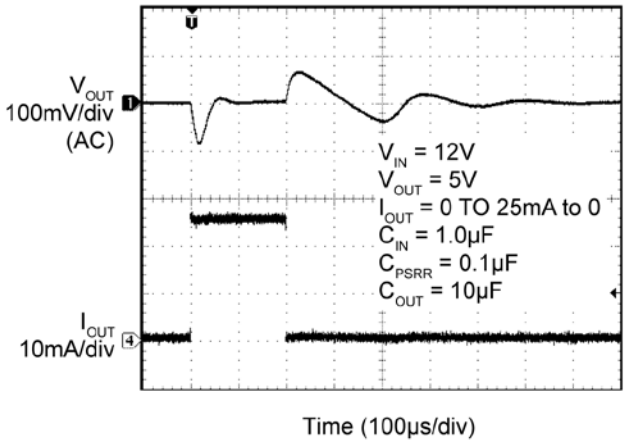

Line Transient Response

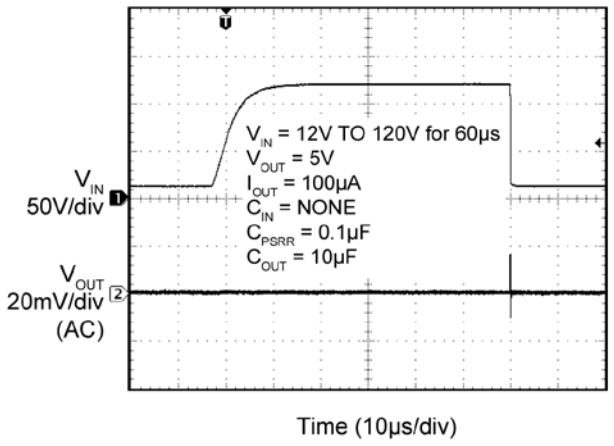

Functional Diagram

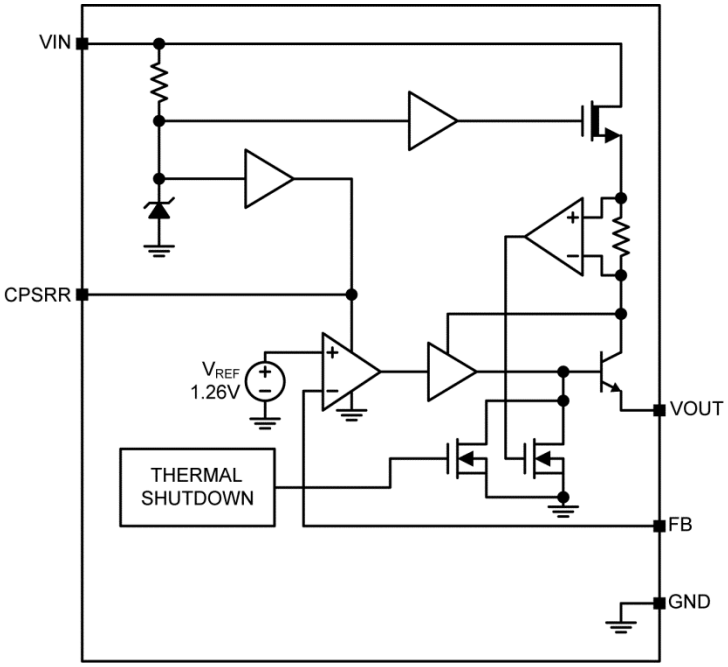

MIC5281 Adjustable Version

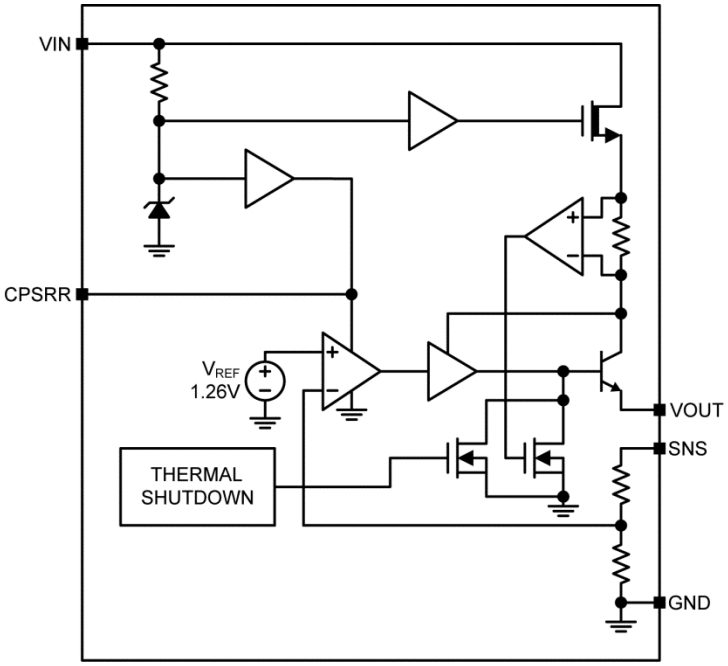

MIC5281 Fixed Version

Functional Description

The MIC5281 voltage regulator accepts a 6V to 120V input and has an ultra-low 6µA typical quiescent current while offering an excellent line transient response and PSRR. These features make it ideal for harsh, noisy environments. All options of the device offer 25mA of output current. The MIC5281YMM and MIC5281YMME offer an adjustable output voltage from 1.27V to 5.5V. The MIC5281-3.3YMME and MIC5281-3.3YMM offer fixed 3.3V outputs and the MIC5281-5.0YMME and MIC5281-5.0YMM offer fixed 5.0V outputs. The YMME packaged devices feature a heat slug to more effectively remove heat from the die.

Applications Information

Thermal Protection

MIC5281 has internal thermal shutdown to protect it from excessive heating of the die. When the junction temperature exceeds approximately +155°C, the output is disabled and the device begins to cool down. The device turns back on when the junction temperature cools by 15°C. This will result in a cycled output during continuous thermal-overload conditions.

Current Limit

MIC5281 features output current-limit protection. The output sustains a continuous short circuit to GND without damage to the device, but thermal shutdown often results.

Input Capacitor

Connect a 1.0µF capacitor from VIN to GND. Micrel recommends the C5750X7R2E105M, 1.0µF, 250V capacitor made by TDK. When using a different capacitor, assure that the voltage rating of the capacitor exceeds any potential transient.

CPSRR Capacitor

Connect a 0.1µF capacitor from CPSRR to GND to maintain high power supply rejection. The voltage rating of the capacitor must be at least 14V.

Output Capacitor

Connect a 10µF capacitor from VOUT to GND. Assure that the voltage rating of the capacitor exceeds the designed output voltage of the MIC5281.

Output Voltage Setting

For the MIC5281YMME and MIC5281YMM, V_{OUT} is programmed from 1.27V to 5.5V using Equation 1:

$$V_{OUT} = V_{REF} \times \left(\frac{R1}{R2} + 1\right) \qquad \text{Eq. 1}$$

where V_{REF} = 1.267V, and R1 and R2 are shown in the Typical Applications circuit.

Thermal Measurements

It is always wise to measure an IC's case temperature to make sure that it is within operating limits, but it is easy to get erroneous results. The standard thermal couple that comes with many voltage meters uses a large wire gauge that behaves like a heat-sink, resulting in artificially low case temperature measurements. Use a thermocouple of 36-gauge wire or smaller, such as the Omega (5SC-TT-K-36-36), to minimize the heat-sinking effect. Also, apply thermal compound to maximize heat transfer between the IC and the thermocouple.

An infrared thermometer is a recommended alternative. The IR thermometer from Optris has a 1mm spot size, ideal for monitoring small surface mount packages. Also, the optional stand makes it easy to keep the beam on the IC for long periods of time.

MIC5281 Evaluation Board Schematic

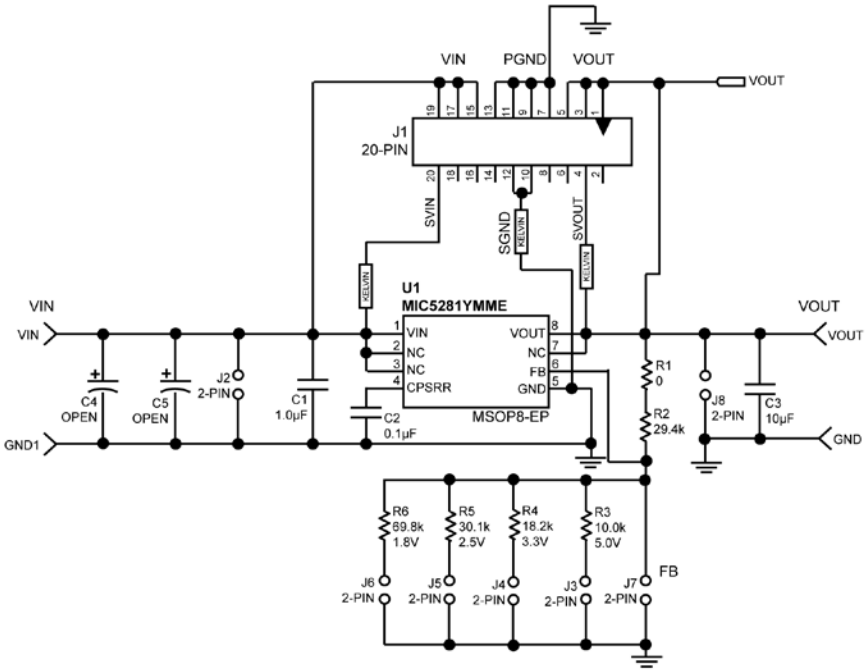

Bill of Materials

Item	Part Number	Manufacturer	Description	Qty.
C1	C5750X7R2E105M	TDK[8]	1.0µF, 250V, 20%, X7R capacitor (2220)	1
C2	08053C104KAT2A	AVX[9]	0.1µF 25V 20%, X5R capacitor (0805)	1
C3	0805ZD106KAT2A	AVX	10µF, 10V, 20%, X5R, capacitor (0805)	1
C4	OPEN	Panasonic[10]	100µF, 160V, 20% capacitor (ALU, 0.492"diameter can 0.197" lead spacing - Part # ECA-2CM101)	0
C5	OPEN	ANY	Capacitor	0
R1	CRCW06030000F	Vishay/Dale[11]	0Ω, 1% resistor, 0603	1
R2	CRCW06032942F	Vishay/Dale	29.4kΩ, 1% resistor, 0603	1
R3	CRCW06031002F	Vishay/Dale	10.0kΩ, 1% resistor, 0603	1
R4	CRCW06031822F	Vishay/Dale	18.2kΩ, 1%, resistor, 0603	1
R5	CRCW06033012F	Vishay/Dale	30.1kΩ, 1% resistor chip, 0603	1
R6	CRCW06036982F	Vishay/Dale	69.8kΩ, 1%, resistor, 0603	1
U1	**MIC5281YMME**	**Micrel[12]**	**120V$_{IN}$, 25mA, Ultra-Low I$_Q$, High-PSRR Linear Regulator**	**1**

Notes:

8. TDK: www.tdk.com.
9. AVX: www.avx.com.
10. Panasonic: www.panasonic.com.
11. Vishay: www.vishay.com.
12. **Micrel, Inc.:** www.micrel.com.

PCB Layout Recommendations

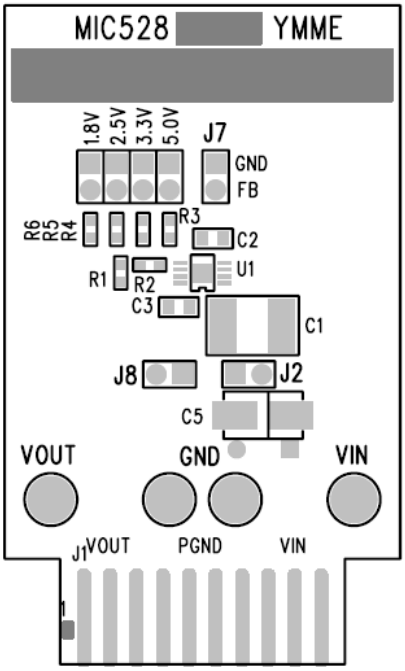

Top Layer Silk Screen

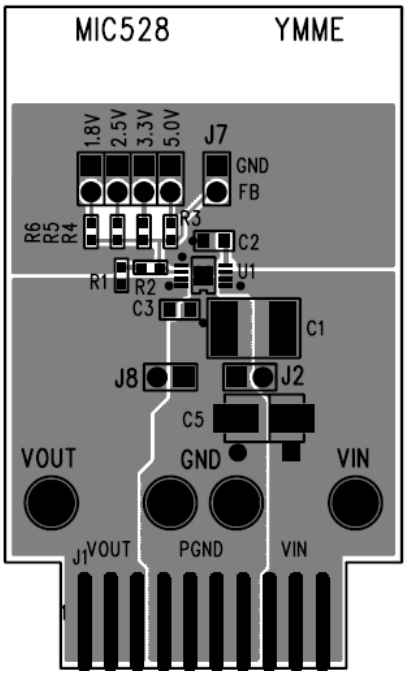

Top Layer Traces

PCB Layout Recommendations (Continued)

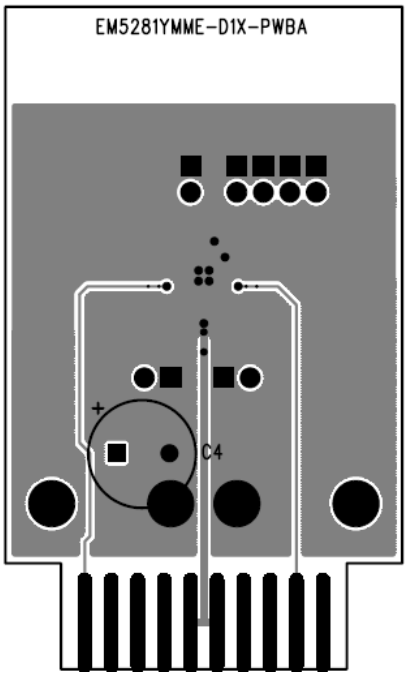

Bottom Layer Traces

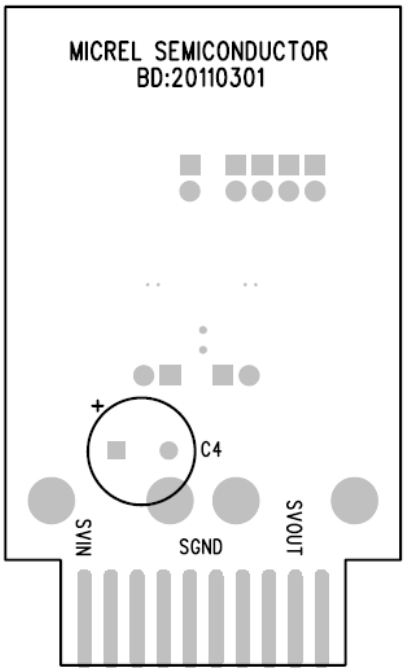

Bottom Layer Silk Screen

PCB Layout Recommendations (Continued)

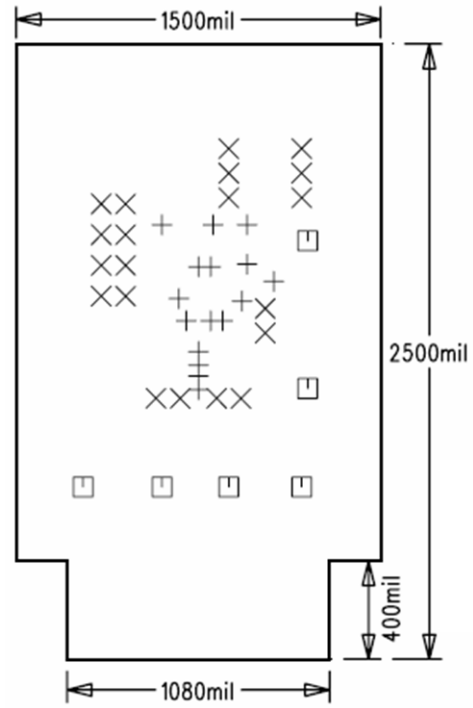

Evaluation Board Dimensions

Package Information and Recommended Landing Pattern[13]

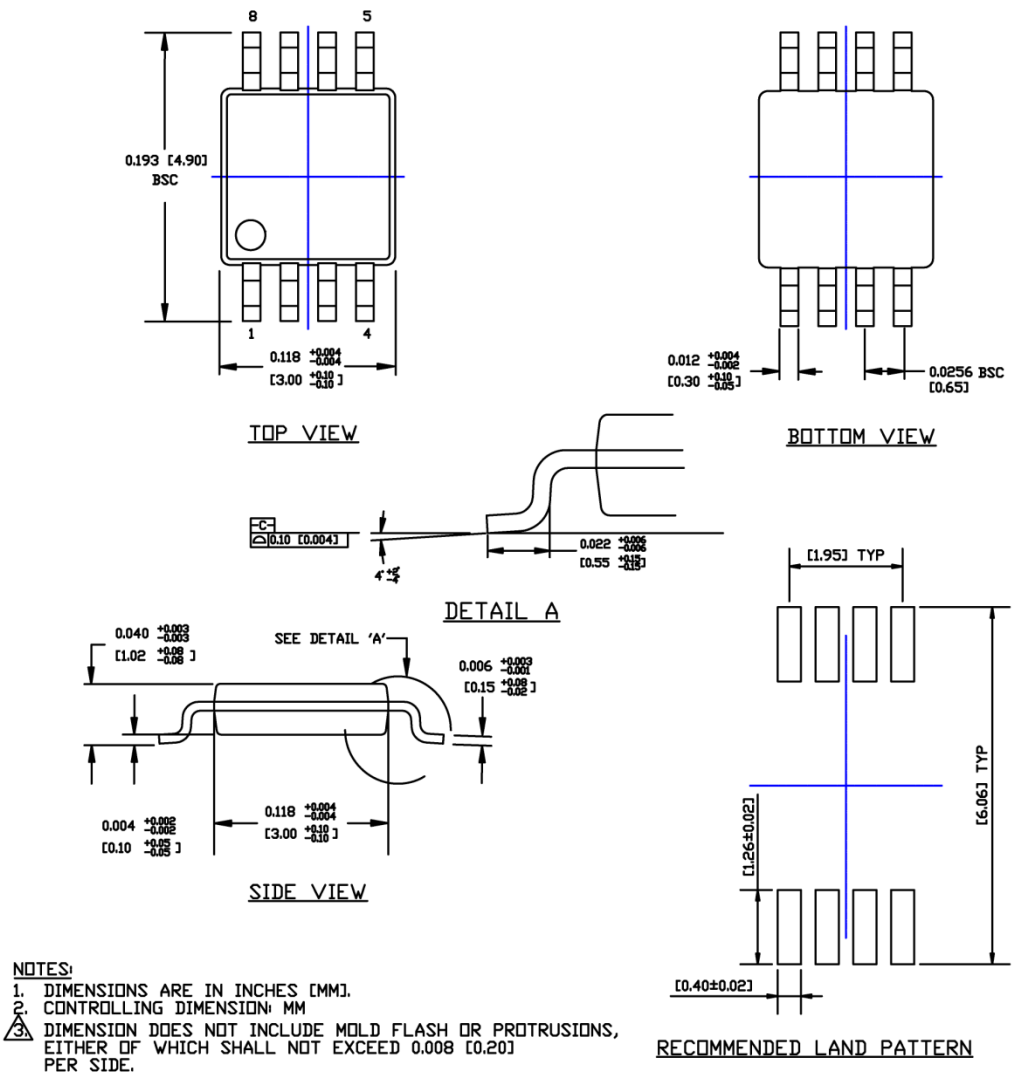

8-Pin MSOP

Note:

13. Package information is correct as of the publication date. For updates and most current information, go to www.micrel.com.

Package Information and Recommended Landing Pattern[13] (Continued)

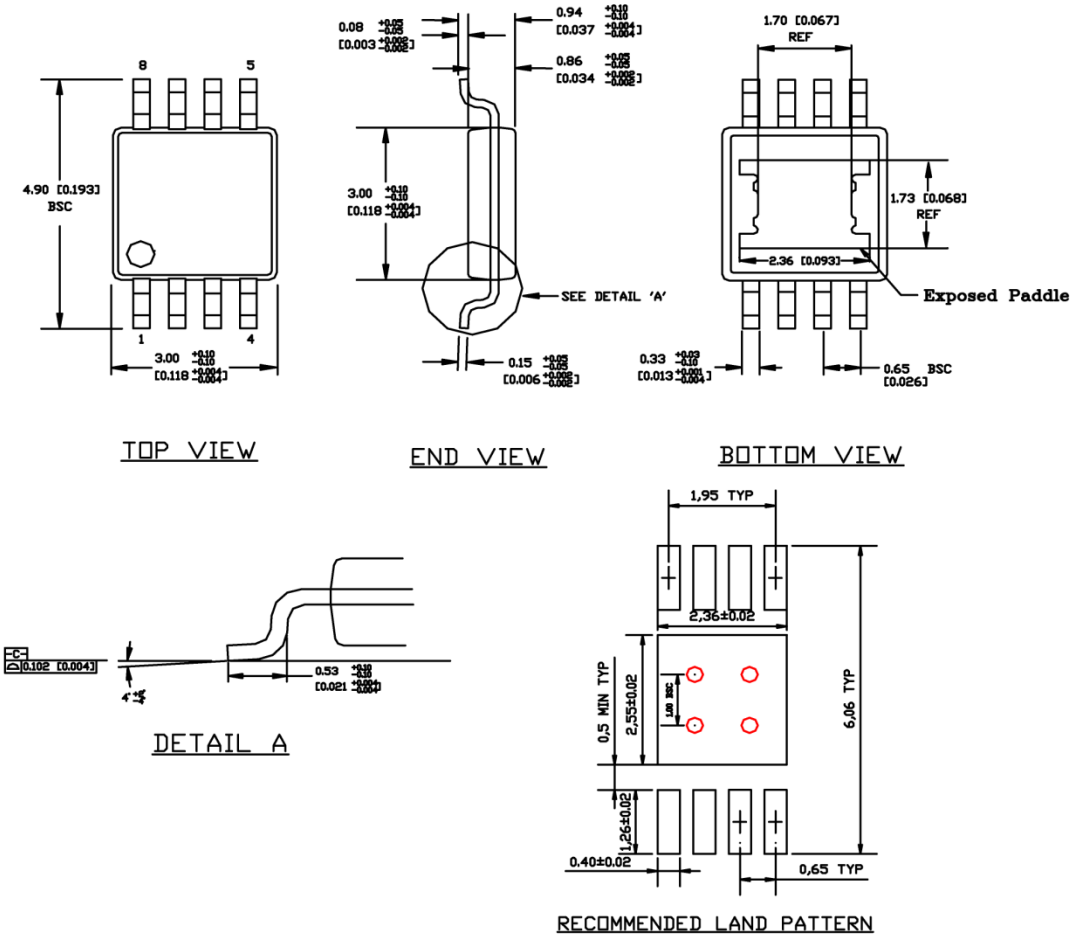

NOTE:
1. DIMENSION DOES NOT INCLUDE MOLD FLASH OR PROTRUSIONS, EITHER OF WHICH SHALL NOT EXCEED 0.20 [0.008] PER SIDE
2. RED CIRCLES IN LAND PATTERN REPRESENT THERMAL VIAS. RECOMMENDED SIZE IS 0.30–0.35MM IN DIAMETER, 1.00 PITCH AND SHOULD BE CONNECTED TO GND FOR MAXIMUM PERFORMANCE

8-Pin Exposed Pad (ePad) MSOP

MICREL, INC. 2180 FORTUNE DRIVE SAN JOSE, CA 95131 USA
TEL +1 (408) 944-0800 FAX +1 (408) 474-1000 WEB http://www.micrel.com

Micrel makes no representations or warranties with respect to the accuracy or completeness of the information furnished in this data sheet. This information is not intended as a warranty and Micrel does not assume responsibility for its use. Micrel reserves the right to change circuitry, specifications and descriptions at any time without notice. No license, whether express, implied, arising by estoppel or otherwise, to any intellectual property rights is granted by this document. Except as provided in Micrel's terms and conditions of sale for such products, Micrel assumes no liability whatsoever, and Micrel disclaims any express or implied warranty relating to the sale and/or use of Micrel products including liability or warranties relating to fitness for a particular purpose, merchantability, or infringement of any patent, copyright or other intellectual property right.

Micrel Products are not designed or authorized for use as components in life support appliances, devices or systems where malfunction of a product can reasonably be expected to result in personal injury. Life support devices or systems are devices or systems that (a) are intended for surgical implant into the body or (b) support or sustain life, and whose failure to perform can be reasonably expected to result in a significant injury to the user. A Purchaser's use or sale of Micrel Products for use in life support appliances, devices or systems is a Purchaser's own risk and Purchaser agrees to fully indemnify Micrel for any damages resulting from such use or sale.

© 2011 Micrel, Incorporated.

X-ON Electronics

Largest Supplier of Electrical and Electronic Components

Click to view similar products for Power Management IC Development Tools ***category:***

Click to view products by Micrel ***manufacturer:***

Other Similar products are found below :

EVB-EP5348UI MIC23451-AAAYFL EV MIC5281YMME EV 124352-HMC860LP3E DA9063-EVAL ADP122-3.3-EVALZ ADP130-0.8-EVALZ ADP130-1.8-EVALZ ADP1740-1.5-EVALZ ADP1870-0.3-EVALZ ADP1874-0.3-EVALZ ADP199CB-EVALZ ADP2102-1.25-EVALZ ADP2102-1.875EVALZ ADP2102-1.8-EVALZ ADP2102-2-EVALZ ADP2102-3-EVALZ ADP2102-4-EVALZ AS3606-DB BQ25010EVM BQ3055EVM ISLUSBI2CKIT1Z LP38512TS-1.8EV EVAL-ADM1186-1MBZ EVAL-ADM1186-2MBZ ADP122UJZ-REDYKIT ADP166Z-REDYKIT ADP170-1.8-EVALZ ADP171-EVALZ ADP1853-EVALZ ADP1873-0.3-EVALZ ADP198CP-EVALZ ADP2102-1.0-EVALZ ADP2102-1-EVALZ ADP2107-1.8-EVALZ ADP5020CP-EVALZ CC-ACC-DBMX-51 ATPL230A-EK MIC23250-S4YMT EV MIC26603YJL EV MIC33050-SYHL EV TPS60100EVM-131 TPS65010EVM-230 TPS71933-28EVM-213 TPS72728YFFEVM-407 TPS79318YEQEVM UCC28810EVM-002 XILINXPWR-083 LMR22007YMINI-EVM LP38501ATJ-EV