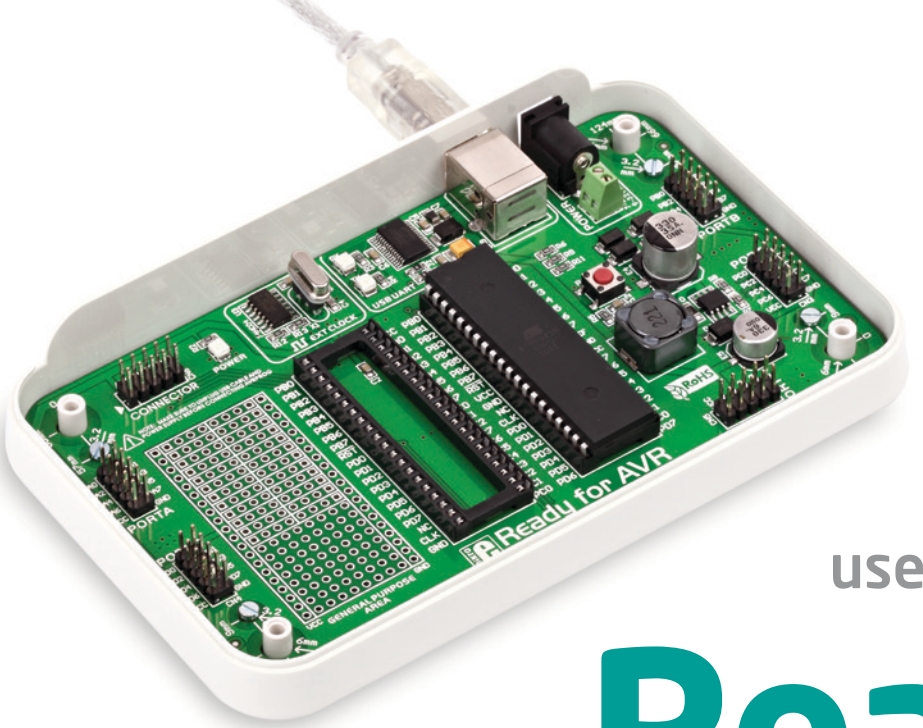

user's guide to

Ready for AVR

box version

MikroElektronika
DEVELOPMENT TOOLS | COMPILERS | BOOKS

TO OUR VALUED CUSTOMERS

I want to express my thanks to you for being interested in our products and for having confidence in Mikroelektronika.

The primary aim of our company is to design and produce high quality electronic products and to constantly improve the performance thereof in order to better suit your needs.

Nebojsa Matic
General Manager

The Microchip, Atmel, NXP and CYPRESS name, logo and products names are trademarks of Microchip, Atmel, NXP and CYPRESS Inc. in the U.S.A and other countries.

Table of Contents

Ready for AVR board Introduction 4
System Specification 5
Components 6
1. Power supply 8
6. External Oscillator 9
4. ATmega16 microcontroller 10
5. Programming the microcontroller 11
Programming with mikroBootloader 12
step 1 – Connecting 12
step 2 - Connecting 13
step 3 - Browsing for .hex file 13
step 4 - Browsing for .hex file 14
step 5 - uploading .hex file 14
step 6 - Finish upload 15
Programing with AVRProg™ programmer 16
6. USB-UART 18
7. Port headers 19
8. General Purpose Area 20
9. Integrating with the casing 21
10. Dimensions 22

Ready for AVR board Introduction

Ready for AVR Board is the best solution for fast and simple development of various microcontroller applications. It comes with **ATmega16** that is placed in DIP40B socket. It is preprogrammed with UART bootloader, so you don't have to use external programmers to program the microcontroller. Board contains double-row IDC10 headers for all available microcontroller ports. It also contains USB-UART module, prototyping area and a power supply circuit. Board is specially designed to fit into special white plastic casing so you can turn your cool AVR project into a final product.

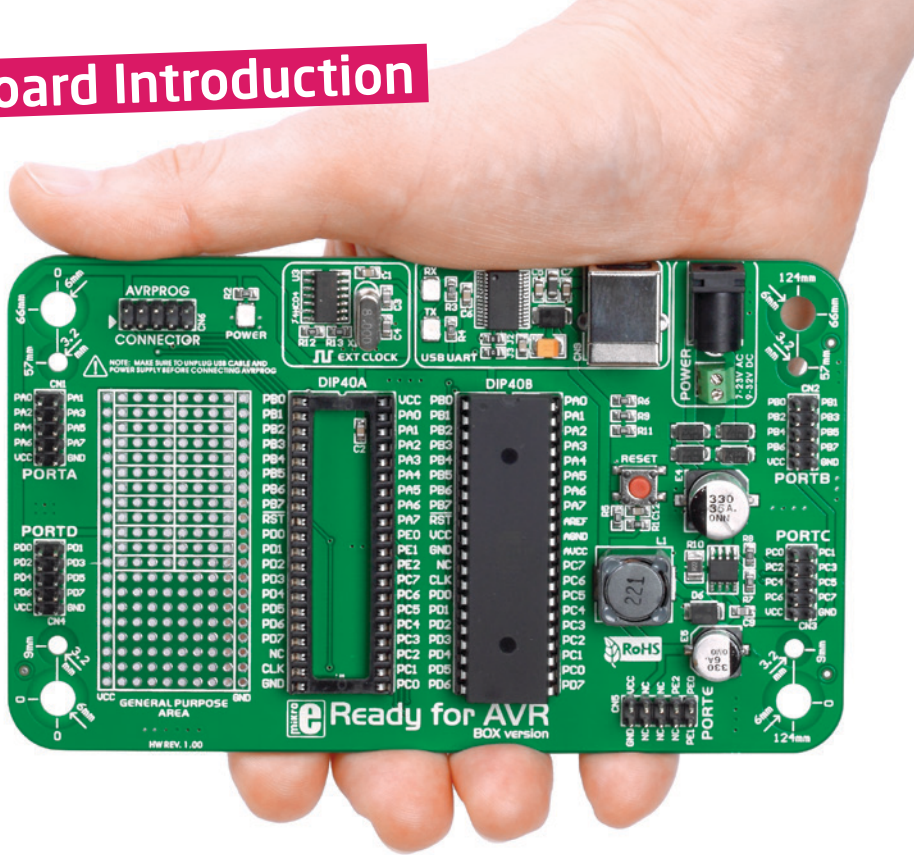

System Specification

power supply

Via AC/DC connector 7-23V AC

or 9-32V DC

power consumption

50mA in idle state

(when on-board modules are off)

board dimensions

14 x 8,2cm (5.51 x 3.23 inch)

weight

~69g (0.15 lbs)

Components

AVRProg™ connector 01
Power LED indicator 02
8MHz external oscillator 03
DIP40A socket 04
UART comm. LEDs (RX, TX) 05
FTDI chip 06
USB UART connector 07
Power connector 08
Power screw terminals 09
IDC10 PORT header 10
Power regulator 11
Reset button 12
ATmega16 microcontroller 13
Prototyping area 14
Mounting holes 15

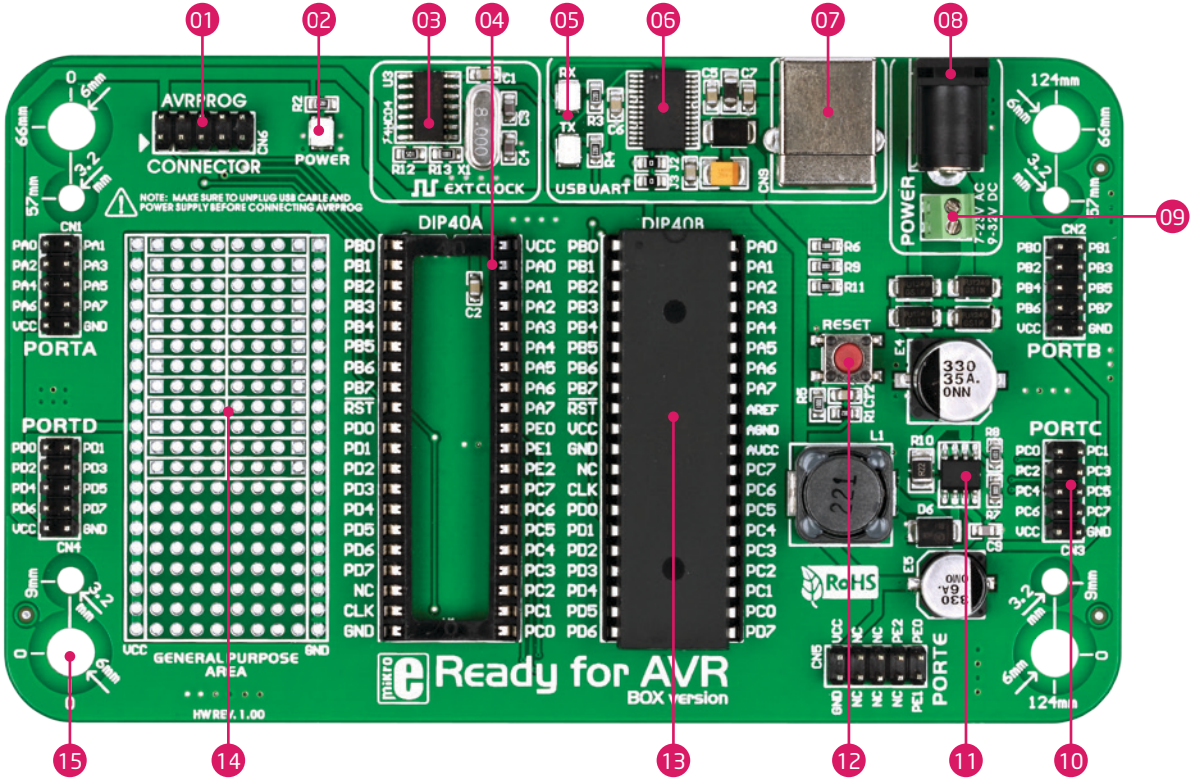
01
02
03
04
05
06
07
08
09
10
11
12
13
14
15
AVRPROG
CONNECTOR
POWER
EXT CLOCK
USB UART
DIP40A
DIP40B
RESET
PORTA
PORTB
PORTC
PORTD
PORTE
GENERAL PURPOSE AREA
HW REV. 1.00
Ready for AVR
BOX version
RoHS

1. Power supply

Ready for AVR board can be powered in two ways: over USB connection, or using external power sources, such as adapters, or laboratory power supplys. USB connection can provide up to 500mA of current, which is more than enough for evey on-board module and for operation of the microcontroller. If you decide to use external power supply, you can choose bewteen AC/DC adapter connector or power screw terminals . Voltage and current values must be within **7-23V AC** or **9-32V DC** ranges. Power LED will indicate the presence of current. Use only one method for powering the board.

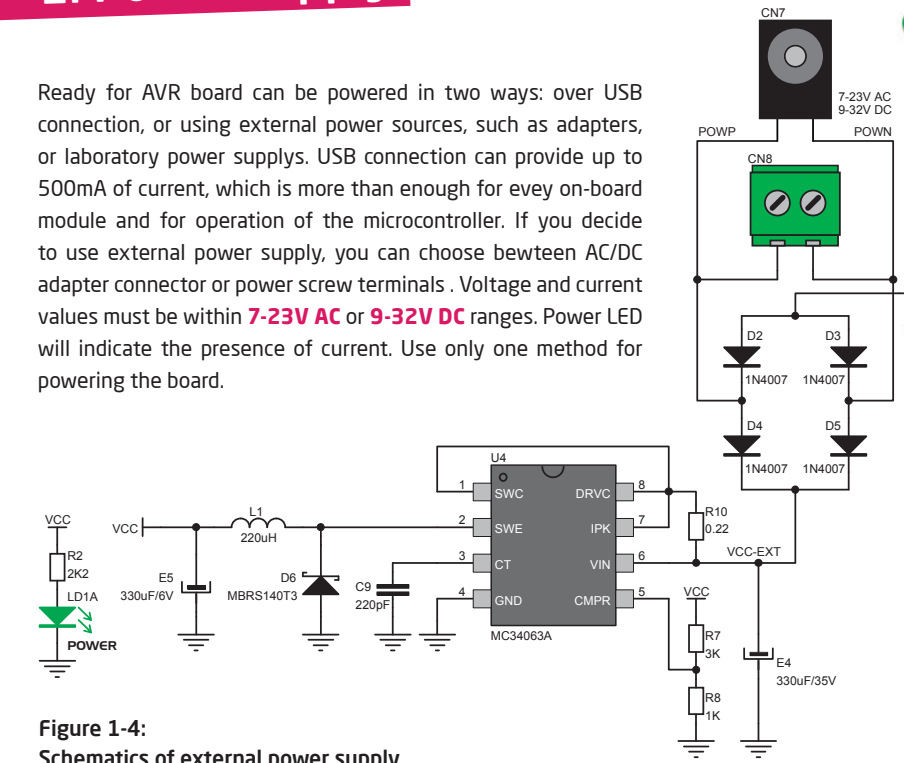

Figure 1-4:
Schematics of external power supply

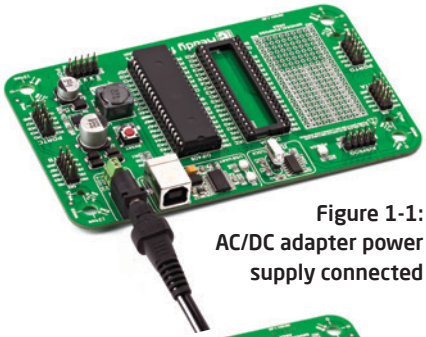

Figure 1-1:
AC/DC adapter power supply connected

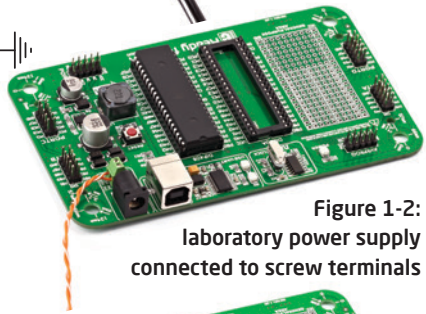

Figure 1-2:
laboratory power supply connected to screw terminals

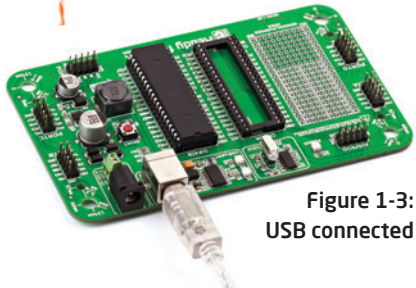

Figure 1-3:
USB connected

6. External Oscillator

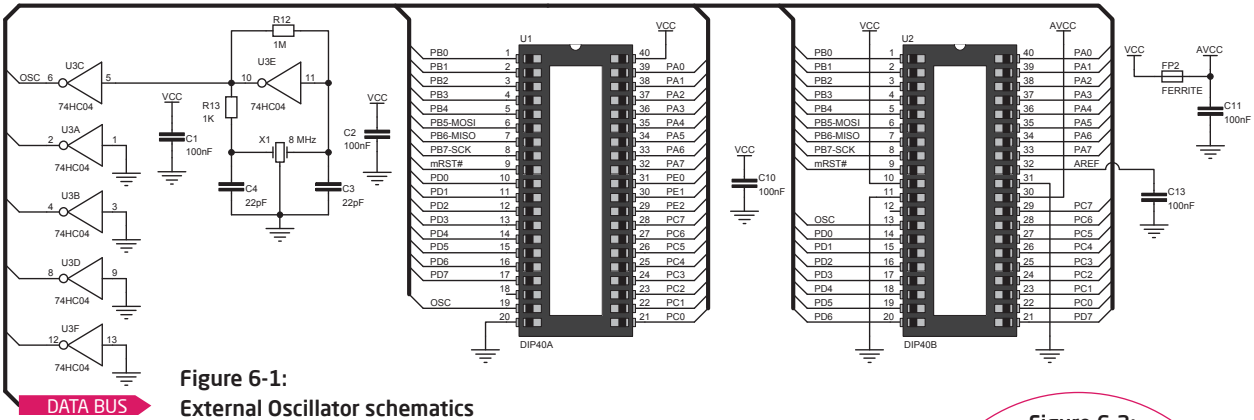

Figure 6-1:
External Oscillator schematics

Board contains 8MHz external crystal oscillator which delivers the clock necessary for the operation of microcontroller. Raw clock signal from the crystal is sinusoidal, so additional 74HC04 is provided which filters it to create square signal necessary for stable operation.

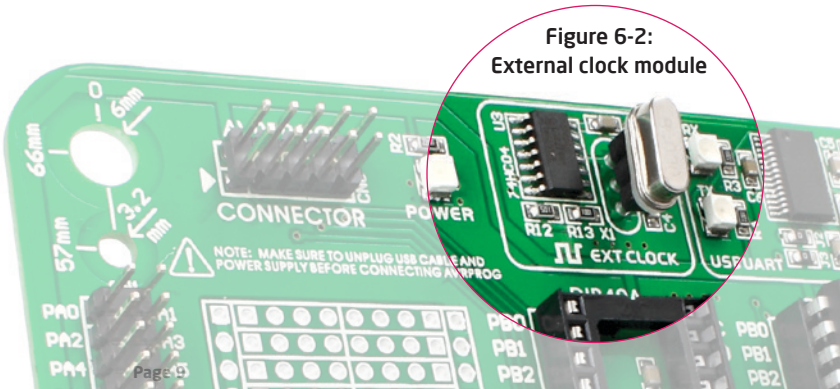

Figure 6-2:
External clock module

4. ATmega16 microcontroller

Ready for AVR development system comes with the **ATmega16** microcontroller. Having lots of MIPS power, flash and RAM, and rich set inegrated modules, ATmega16 is ideal choice for both beginners and professionals.

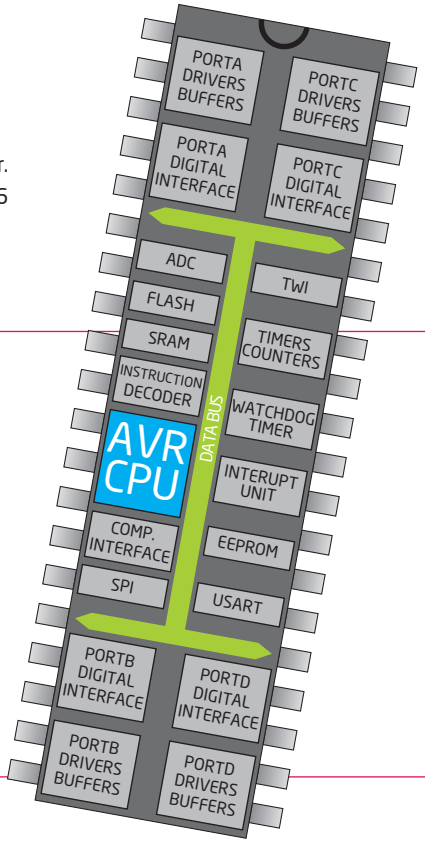

Key microcontroller features

- Up to **16 MIPS** Operation;
- 8-bit architecture;
- 16 KB of Flash program memory;
- 1 KB of internal SRAM memory;
- 512 Bytes of EEPROM
- 32 I/O pins;
- UART, SPI, ADC; etc.
- JTAG DEBUGING interface

5. Programming the microcontroller

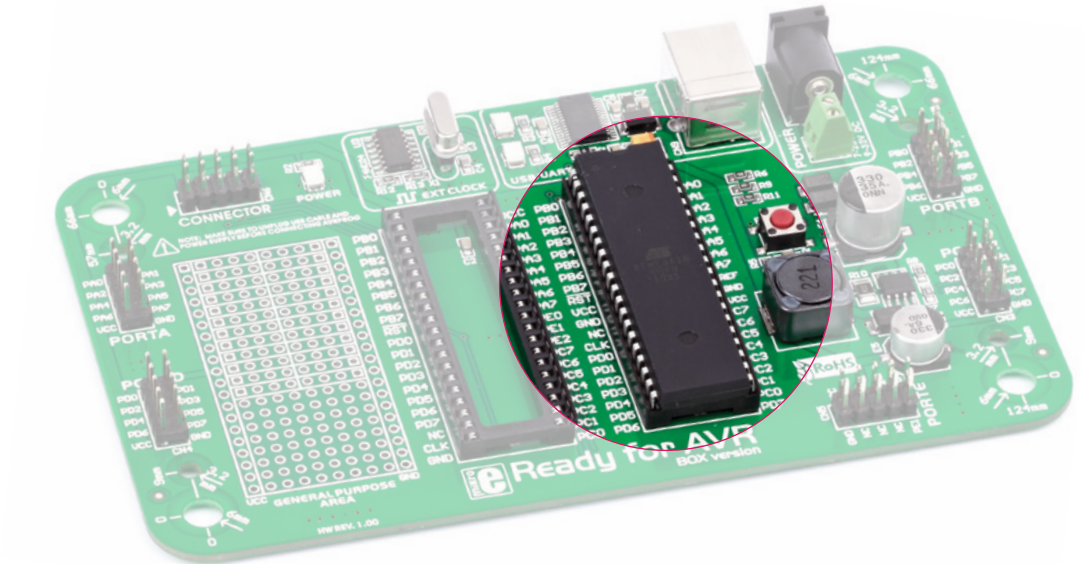

Figure 5-1: ATmega16

The microcontroller can be programmed in two ways:

01 Over USB-UART mikroBootloader

02 Using JTAG external programmer

Programming with mikroBootloader

You can program the microcontroller with bootloader which is preprogrammed into the device by default. To transfer .hex file from a PC to MCU you need bootloader software (**mikroBootloader USB HID**) which can be downloaded from:

http://www.mikroe.com/eng/downloads/get/1652/mikrobootloader_atmega16_v100.zip

After software is downloaded unzip it to desired location and start mikroBootloader USB HID software.

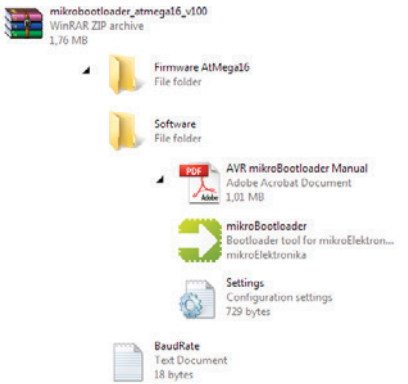

step 1 – Connecting

01 Start mikroBootloader

02 Click the **Change Settings button**.

03 In Setup window, select appropriate **COM port**. Click OK.

Figure 5-2: UART mikroBootloader

note *This version of mikroBootloader is for AVR microcontrollers only.*

step 2 - Connecting

Figure 5-3: Browse for HEX

01 Press **reset button** on Ready board.

02 Click **Connect button** within 5s, otherwise existing microcontroller program will execute.

step 3 - Browsing for .hex file

Figure 5-4: Browse for HEX

01 Click on **Browse for HEX button**.

step 4 - Browsing for .hex file

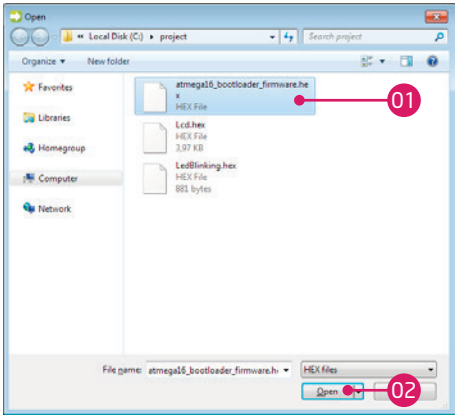

Figure 5-5: Locating and Selecting .hex file

01 Select .hex file via open dialog window.

02 Click on **Open button**.

step 5 - uploading .hex file

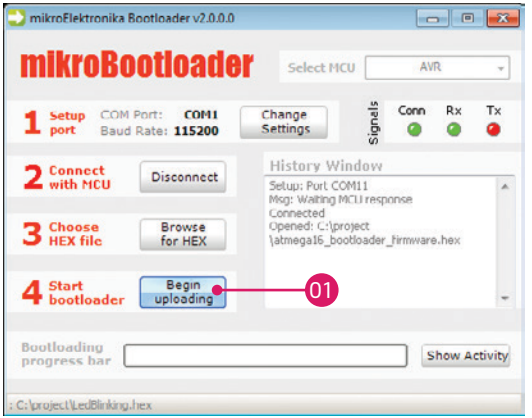

Figure 5-6: Begin uploading

01 To start .hex file uploading click on **Begin uploading button**.

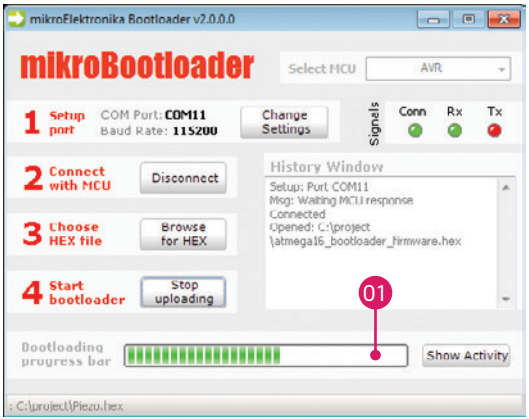

Figure 5-7: Progress bar

01 You can monitor .hex file uploading via progress bar.

step 6 - Finish upload

Figure 5-8: Browse for HEX

01 Click **OK button**.

02 Press **Reset button** on Ready board and wait for 5 seconds. Your program will execute automaticly.

Programing with AVRProg™ programmer

Ready for AVR board contains IDC10 male headers for connecting **AVRprog™** external USB 2.0 programmer. When connecting, make sure to orient the programmer connector so that first pins on both male and female header connectors align. Correct connector placement is shown on Figure 5-9.

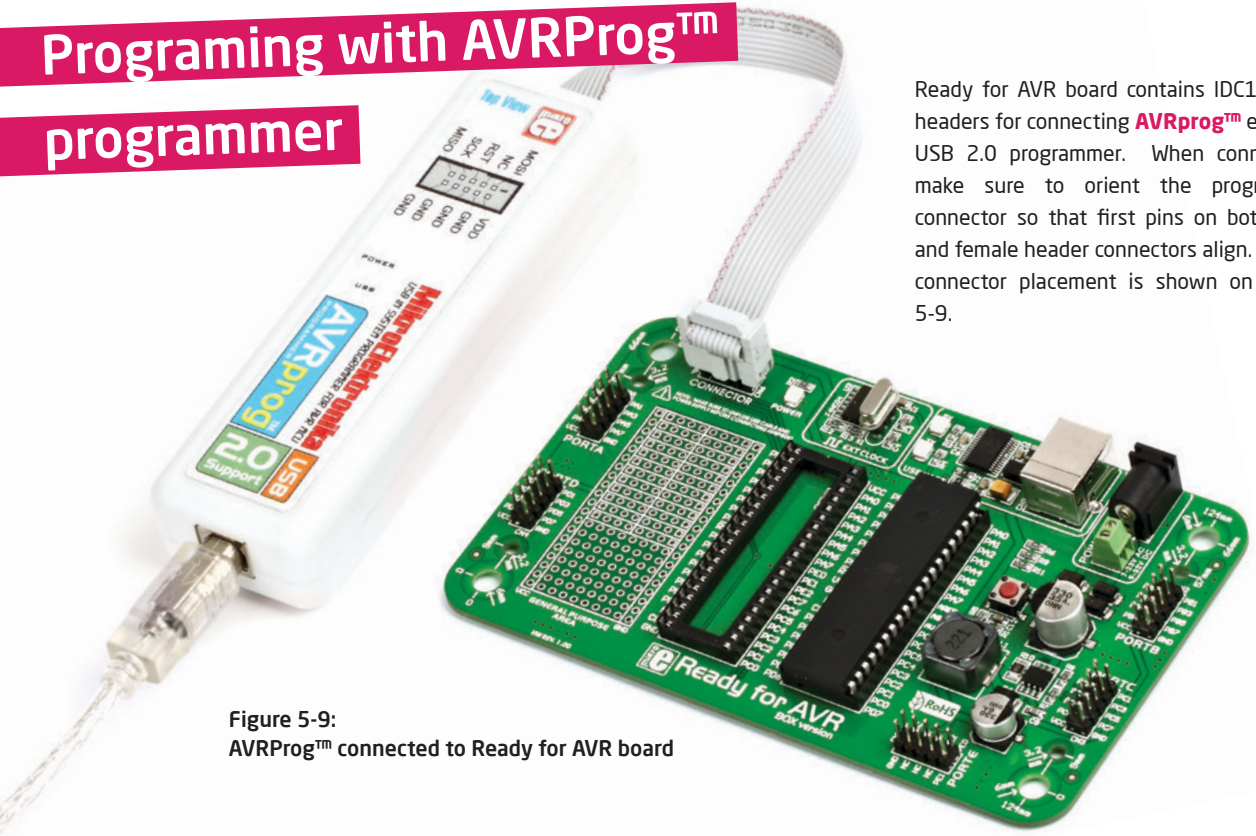

Figure 5-9:
AVRProg™ connected to Ready for AVR board

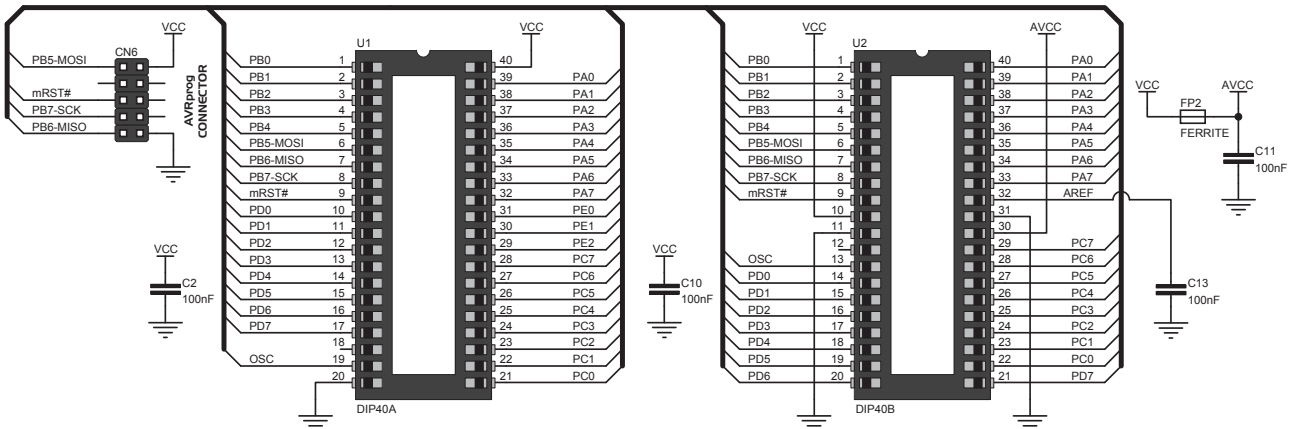

Figure 5-10: AVRprog™ connector schematics

6. USB-UART

Fast on-board FTDI chip allows you to communicate with a PC or other UART devices using USB-UART connection. Female USB Type-B connector (**CN9**) is used for connecting the USB cable. RX and TX LEDs will indicate communication status. Before connecting the board with the PC, make sure to have the appropriate FTDI drivers installed on your operating system. Drivers can be found at following URL: **http://www.ftdichip.com/Drivers/VCP.htm**

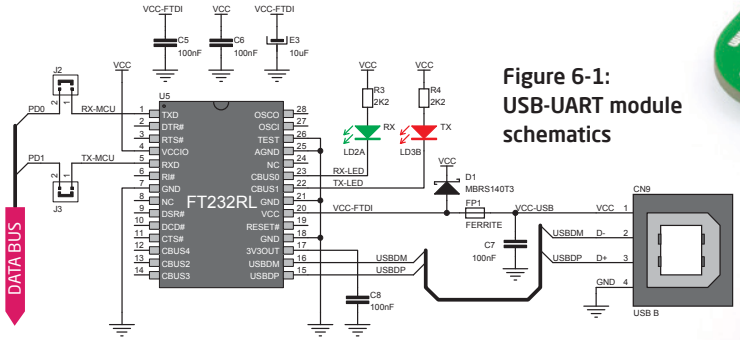

Figure 6-1: USB-UART module schematics

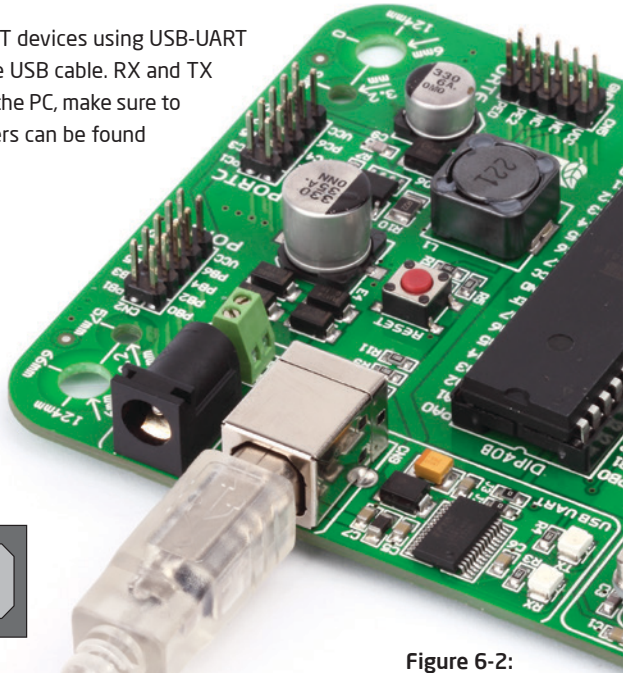

Figure 6-2: USB cable connected

7. Port headers

Each microcontroller pin is available for futher connections through on-board connection headers. Pins are clearly marked which makes them easier to interface. IDC10 headers are compatible with over 70 additional boards from mikroElektronika, so you can easily add new features to the base Ready for AVR board.

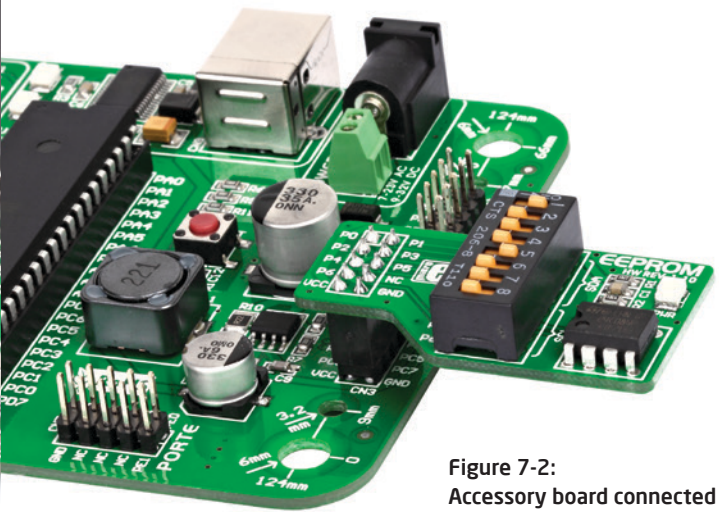

Figure 7-2:
Accessory board connected

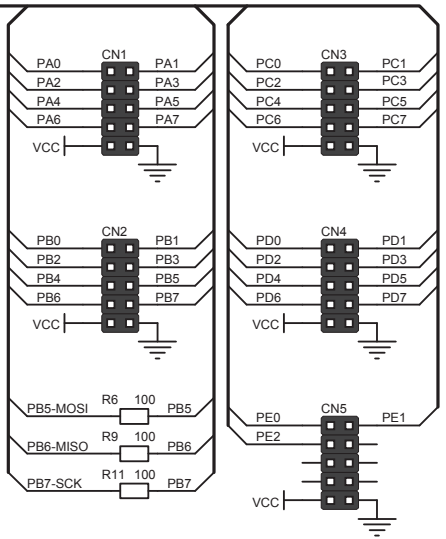

Figure 7-1:
Port headers connection schematics

8. General Purpose Area

General Purpose Area allows you to expand your Ready for AVR board with additional functionalities, by placing your additional components into available soldering pads. Pads are arranged in standard 100mil distance form factor. There are 12 connected lines on both halfs of the breadboard area, and each line consists of 4 soldering pads. 8x8 matrix of unconnected soldering pads are located in the lower section. VCC and GND lines are also availble on the ending sides of the entire breadboard area.

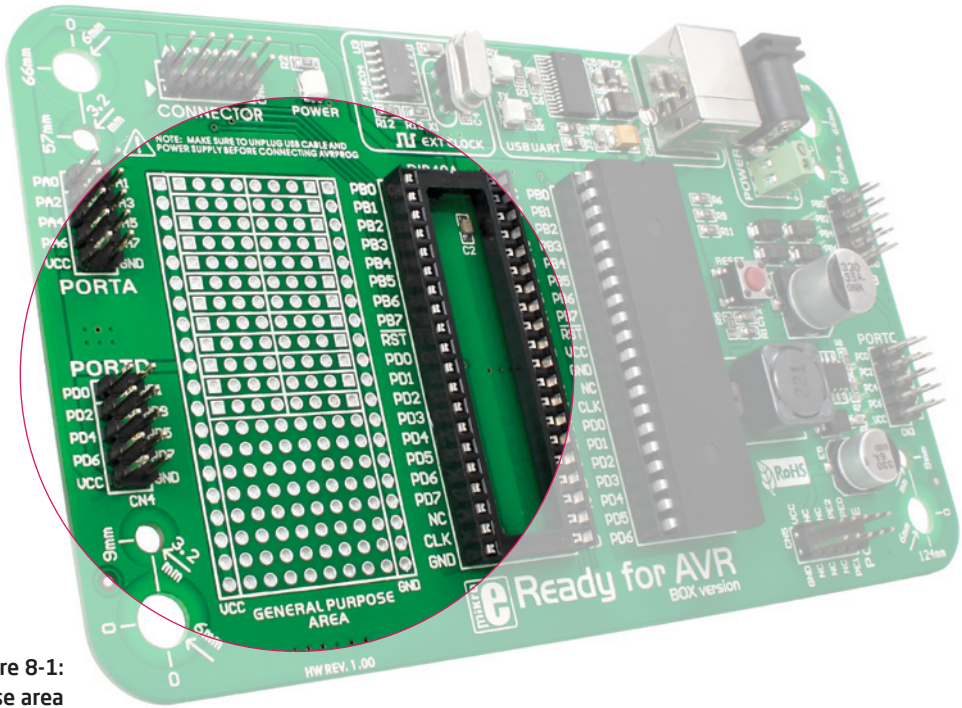

Figure 8-1:
General purpose area

9. Integrating with the casing

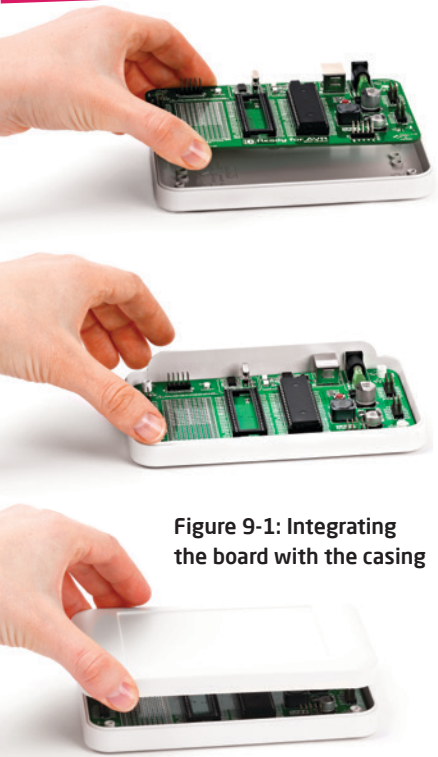

Figure 9-1: Integrating the board with the casing

Ready for AVR can easily be integrated into the specialized white plastic casing. This feature is very conveinent for turning the board into a final product. The white plastic casing contains inner and outter screw holes. Inner are used for attaching the board to the casing, and outter are used for connecting the top part of the casing, and enclosing the board. Casing comes with holes for USB and power adapter connector, but you can cosutmize it by driling and cutting holes in specific areas, depending on the target application. Casing does not provide
hydro insulation.

Figure 9-2: Board assembled with the casing to form a final poduct

10. Dimensions

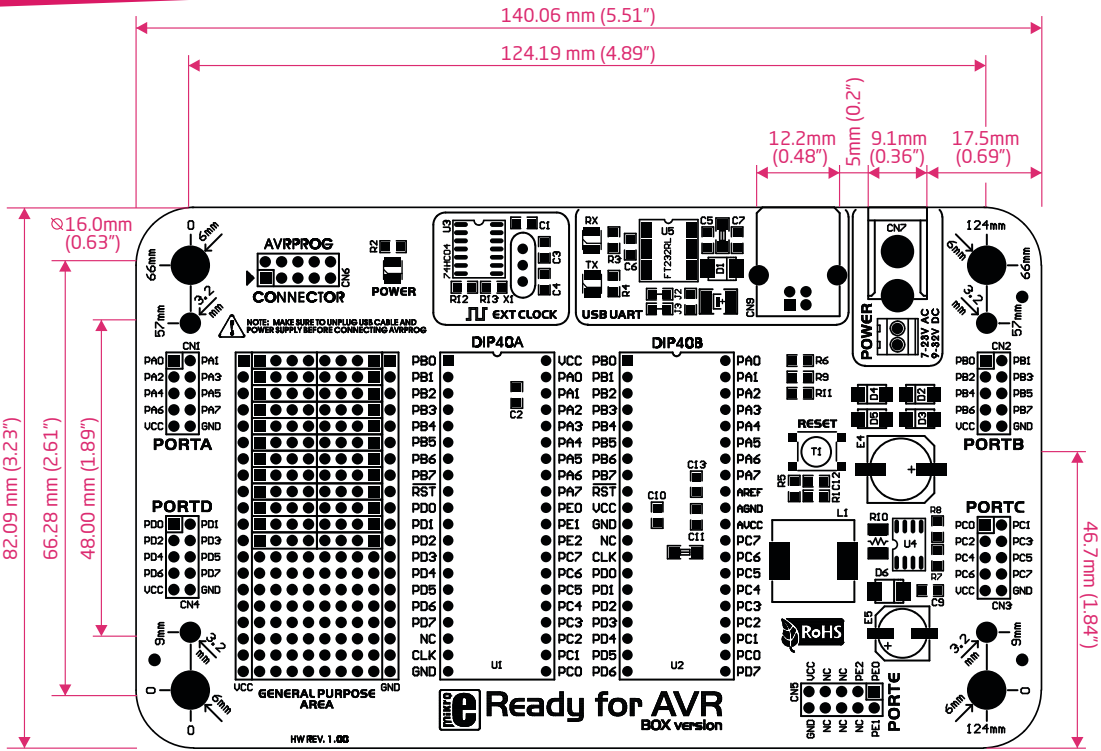

DISCLAIMER

All the products owned by MikroElektronika are protected by copyright law and international copyright treaty. Therefore, this manual is to be treated as any other copyright material. No part of this manual, including product and software described herein, may be reproduced, stored in a retrieval system, translated or transmitted in any form or by any means, without the prior written permission of MikroElektronika. The manual PDF edition can be printed for private or local use, but not for distribution. Any modification of this manual is prohibited.
MikroElektronika provides this manual 'as is' without warranty of any kind, either expressed or implied, including, but not limited to, the implied warranties or conditions of merchantability or fitness for a particular purpose.
MikroElektronika shall assume no responsibility or liability for any errors, omissions and inaccuracies that may appear in this manual. In no event shall MikroElektronika, its directors, officers, employees or distributors be liable for any indirect, specific, incidental or consequential damages (including damages for loss of business profits and business information, business interruption or any other pecuniary loss) arising out of the use of this manual or product, even if MikroElektronika has been advised of the possibility of such damages. MikroElektronika reserves the right to change information contained in this manual at any time without prior notice, if necessary.

HIGH RISK ACTIVITIES

The products of MikroElektronika are not fault – tolerant nor designed, manufactured or intended for use or resale as on – line control equipment in hazardous environments requiring fail – safe performance, such as in the operation of nuclear facilities, aircraft navigation or communication systems, air traffic control, direct life support machines or weapons systems in which the failure of Software could lead directly to death, personal injury or severe physical or environmental damage ('High Risk Activities'). MikroElektronika and its suppliers specifically disclaim any expressed or implied warranty of fitness for High Risk Activities.

TRADEMARKS

The MikroElektronika name and logo, the MikroElektronika logo, mikroC, mikroC PRO, mikroBasic, mikroBasic PRO, mikroPascal, mikroPascal PRO, AVRflash, PICflash, dsPICprog, 18FJprog, PSOCprog, AVRprog, 8051prog, ARMflash, EasyPIC5, EasyPIC6, BigPIC5, BigPIC6, dsPIC PRO4, Easy8051B, EasyARM, EasyAVR5, EasyAVR6, BigAVR2, EasydsPIC4A, EasyPSoC4, EasyVR Stamp LV18FJ, LV24-33A, LV32MX, PIC32MX4 MultiMedia Board, PICPLC16, PICPLC8 PICPLC4, SmartGSM/GPRS, UNI-DS are trademarks of Mikroelektronika. All other trademarks mentioned herein are property of their respective companies.
All other product and corporate names appearing in this manual may or may not be registered trademarks or copyrights of their respective companies, and are only used for identification or explanation and to the owners' benefit, with no intent to infringe.

© Mikroelektronika™, 2011, All Rights Reserved.

Ready for AVR

box version

If you want to learn more about our products, please visit our website at www.mikroe.com
If you are experiencing some problems with any of our products or just need additional information, please place your ticket at www.mikroe.com/en/support
If you have any questions, comments or business proposals, do not hesitate to contact us at office@mikroe.com

X-ON Electronics

Largest Supplier of Electrical and Electronic Components

Click to view similar products for Development Boards & Kits - AVR ***category:***

Click to view products by MikroElektronika ***manufacturer:***

Other Similar products are found below :

3264 ATAVRPARROT ATSAMR21B18MZ210PAT CS-EASE-03 EV35F40A A100053 1222 MIKROE-2474 1260 KIT0018 1405 DEV-10914 1500 1639 1657 174 193 2000 2010 3208 ATRCB256RFR2 ATXMEGAA1U-XPRO 2085 ATSTK600-SC48 2290 2466 2488 DEV-11520 2590 296 3000 ATAVRBLE-IOT ATTINY416-XNANO DFR0010 DFR0100 DFR0164 DFR0191 DFR0221 DFR0222 DFR0225 DFR0233 DFR0282 DFR0327 DRI0027 KIT0111 K030007 DFR0351 DEV-13614 KIT-14265 3379