NHD-0224BZ1-FSW-FBW

Character Liquid Crystal Display Module

NHD-	Newhaven Display
0224-	2 Lines x 24 Characters
BZ1-	Model
F-	Transflective
SW-	Side White LED Backlight
F-	FSTN Positive
B-	6:00 Optimal View
W-	Wide Temperature
	RoHS Compliant

Newhaven Display International, Inc.

2511 Technology Drive, Suite 101

Elgin IL, 60124

Ph: 847-844-8795 Fax: 847-844-8796

www.newhavendisplay.com

nhtech@newhavendisplay.com nhsales@newhavendisplay.com

Document Revision History

Revision	Date	Description	Changed by
0	10/21/08	Initial Release	-
1	11/5/09	User Guide Reformat	MC
2	3/2/11	Alternate controller information updated	AK
3	5/5/11	Electrical characteristics updated	AK
4	12/12/12	Mechanical drawing updated	AK
5	6/28/17	Mechanical Drawing, Electrical & Optical Char. Updated	NP
6	3/9/19	Electrical Characteristics Updated	SB

Functions and Features

- **2 lines x 24 characters**
- **Built-in controllers (ST7066U)**
- **+5.0V Power Supply**
- **1/16 duty, 1/5 bias**
- **RoHS compliant**

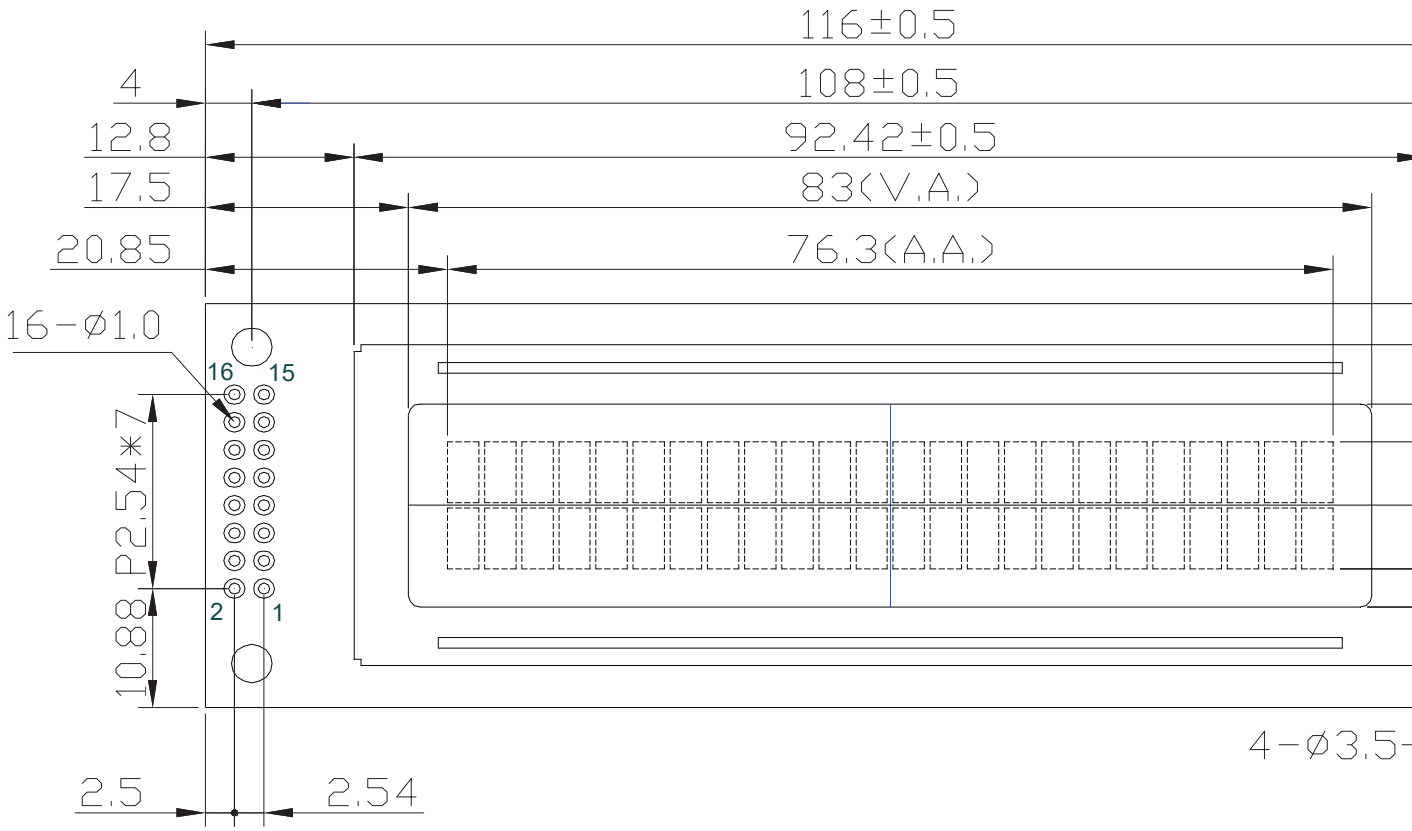

Notes:

1. Driver: 1/16 Duty, 1/5 Bias
2. Voltage: 5.0V VDD, 4.5V VLCD
3. Display Mode: FSTN Positive/ Transflective
4. Optimal View: 6:00
5. Backlight: White LED
6. Driver IC: ST7066U 8/4-Bit MPU Interfa

Pin Description and Wiring Diagram

Pin No.	Symbol	External Connection	Function Description
1	V_{SS}	Power Supply	Ground
2	V_{DD}	Power Supply	Supply Voltage for Logic (+5.0V)
3	V_0	Power Supply	Supply Voltage for Contrast (approx. 0.5V)
4	RS	MPU	Register Select signal. RS=0: Command, RS=1: Data
5	R/W	MPU	Read/Write select signal, R/W=1: Read R/W:=0: Write
6	E	MPU	Operation Enable signal. Falling edge triggered.
7-10	DB0-DB3	MPU	Four low order bi-directional three-state data bus lines. These four are not used during 4-bit operation.
11-14	DB4-DB7	MPU	Four high order bi-directional three-state data bus lines.
15	LED+	Power Supply	Backlight Anode (30mA @ 5.0V)
16	LED-	Power Supply	Backlight Cathode (Ground)

Recommended LCD connector: 2.54mm pitch pins
Backlight connector: --- **Mates with:** ---

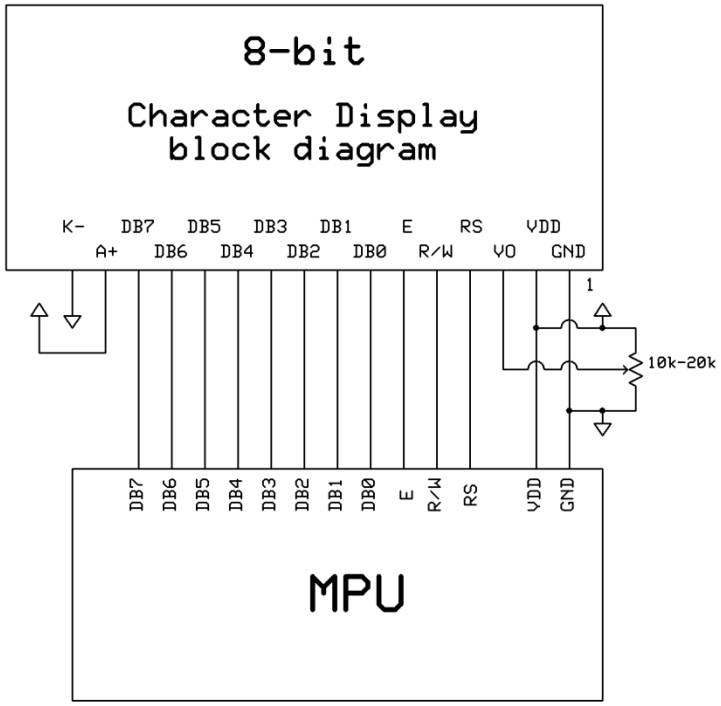

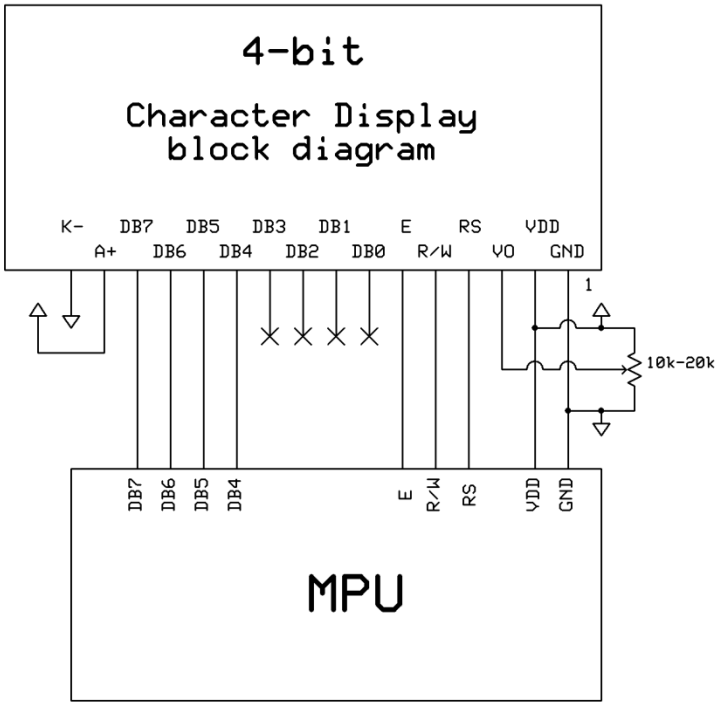

Electrical Characteristics

Item	Symbol	Condition	Min.	Typ.	Max.	Unit
Operating Temperature Range	T_{OP}	Absolute Max	-20	-	+70	°C
Storage Temperature Range	T_{ST}	Absolute Max	-30	-	+80	°C
Supply Voltage	V_{DD}	-	4.8	5.0	5.2	V
Supply Current	I_{DD}	V_{DD} = 5.0V T_{OP} = 25°C	0.5	1.5	2.5	mA
Supply for LCD (contrast)	V_{LCD}		4.3	4.5	4.7	V
"H" Level input	V_{IH}	-	0.7 * V_{DD}	-	V_{DD}	V
"L" Level input	V_{IL}	-	V_{SS}	-	0.6	V
"H" Level output	V_{OH}	-	3.9	-	V_{DD}	V
"L" Level output	V_{OL}	-	V_{SS}	-	0.4	V
Backlight Supply Voltage	V_{LED}	-	4.8	5.0	5.2	V
Backlight Supply Current	I_{LED}	V_{LED} = 5V	20	30	40	mA

Optical Characteristics

Item		Symbol	Condition	Min.	Typ.	Max.	Unit
Optimal Viewing Angles	Top	φY+	CR ≥ 2	30	40	-	°
	Bottom	φY-		50	60	-	°
	Left	θX-		50	60	-	°
	Right	θX+		50	60	-	°
Contrast Ratio		CR	-	2	5	-	-
Response Time	Rise	T_R	T_{OP} = 25°C	-	150	250	ms
	Fall	T_F		-	200	300	ms

Controller Information

Built-in ST7066U controller.
Please download specification at http://www.newhavendisplay.com/app_notes/ST7066U.pdf

DDRAM Address

1	2	3	4	5	6	7	8	9	10	11	12	13	14	15	16	17	18	19	20	21	22	23	24
00	01	02	03	04	05	06	07	08	09	0A	0B	0C	0D	0E	0F	10	11	12	13	14	15	16	17
40	41	42	43	44	45	46	47	48	49	4A	4B	4C	4D	4E	4F	50	51	52	53	54	55	56	57

Table of Commands

Instruction	Instruction code										Description	Execution time (f_{OSC}= 270 KHZ
	RS	R/W	DB7	DB6	DB5	DB4	DB3	DB2	DB1	DB0		
Clear Display	0	0	0	0	0	0	0	0	0	1	Write “20H” to DDRAM and set DDRAM address to “00H” from AC	1.52ms
Return Home	0	0	0	0	0	0	0	0	1	-	Set DDRAM Address to “00H” from AC and return cursor to its original position if shifted. The contents of DDRAM are not changed.	1.52ms
Entry mode Set	0	0	0	0	0	0	0	1	I/D	SH	Sets cursor move direction and specifies display shift. These parameters are performed during data write and read.	37µs
Display ON/ OFF control	0	0	0	0	0	0	1	D	C	B	D=1: Entire display on C=1: Cursor on B=1: Blinking cursor on	37µs
Cursor or Display shift	0	0	0	0	0	1	S/C	R/L	-	-	Sets cursor moving and display shift control bit, and the direction without changing DDRAM data.	37µs
Function set	0	0	0	0	1	DL	N	F	-	-	DL: Interface data is 8/4 bits N: Number of lines is 2/1 F: Font size is 5x11/5x8	37µs
Set CGRAM Address	0	0	0	1	AC5	AC4	AC3	AC2	AC1	AC0	Set CGRAM address in address counter	37µs
Set DDRAM Address	0	0	1	AC6	AC5	AC4	AC3	AC2	AC1	AC0	Set DDRAM address in address counter.	37µs
Read busy Flag and Address	0	1	BF	AC6	AC5	AC4	AC3	AC2	AC1	AC0	Whether during internal operation or not can be known by reading BF. The contents of address counter can also be read.	0s
Write data To Address	1	0	D7	D6	D5	D4	D3	D2	D1	D0	Write data into internal RAM (DDRAM/CGRAM).	37µs
Read data From RAM	1	1	D7	D6	D5	D4	D3	D2	D1	D0	Read data from internal RAM (DDRAM/CGRAM).	37µs

Timing Characteristics

Writing data from MPU to ST7066U

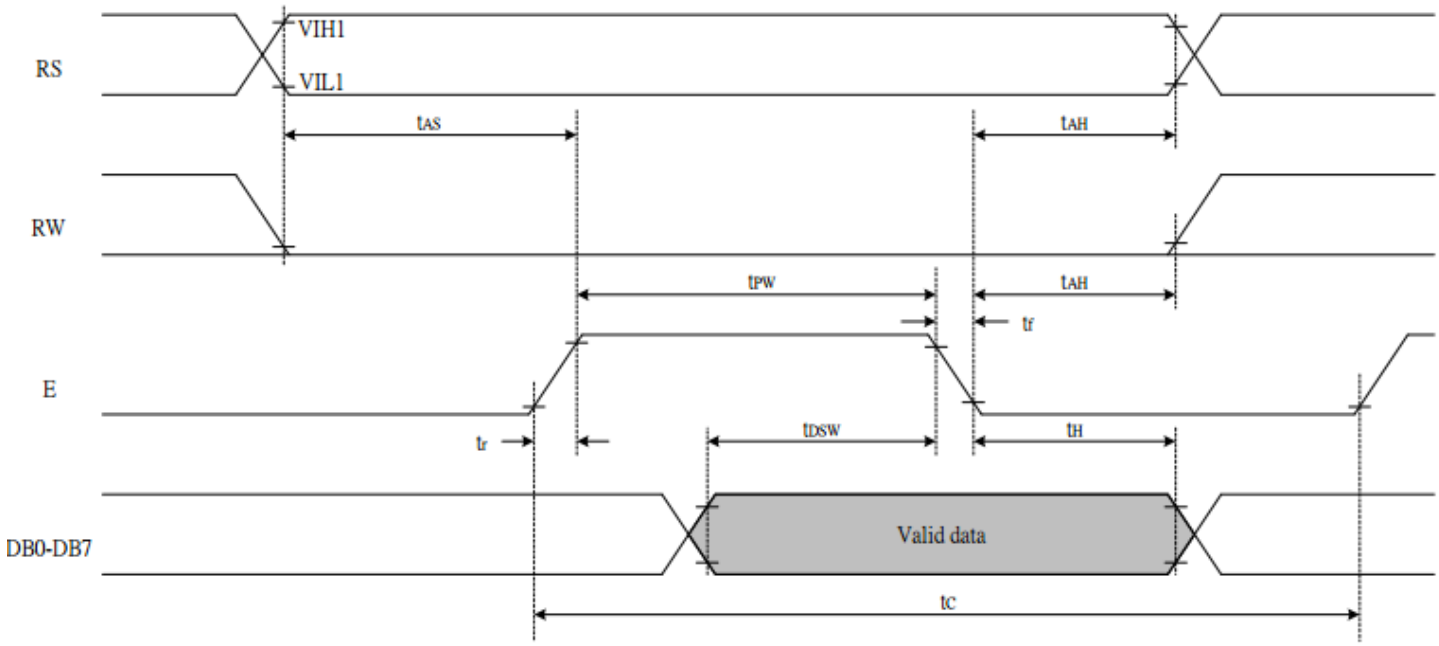

Write Mode (Writing data from MPU to ST7066U)						
T_C	Enable Cycle Time	Pin E	1200	-	-	ns
T_{PW}	Enable Pulse Width	Pin E	140	-	-	ns
T_R,T_F	Enable Rise/Fall Time	Pin E	-	-	25	ns
T_{AS}	Address Setup Time	Pins: RS,RW,E	0	-	-	ns
T_{AH}	Address Hold Time	Pins: RS,RW,E	10	-	-	ns
T_{DSW}	Data Setup Time	Pins: DB0 - DB7	40	-	-	ns
T_H	Data Hold Time	Pins: DB0 - DB7	10	-	-	ns

Reading data from ST7066U to MPU

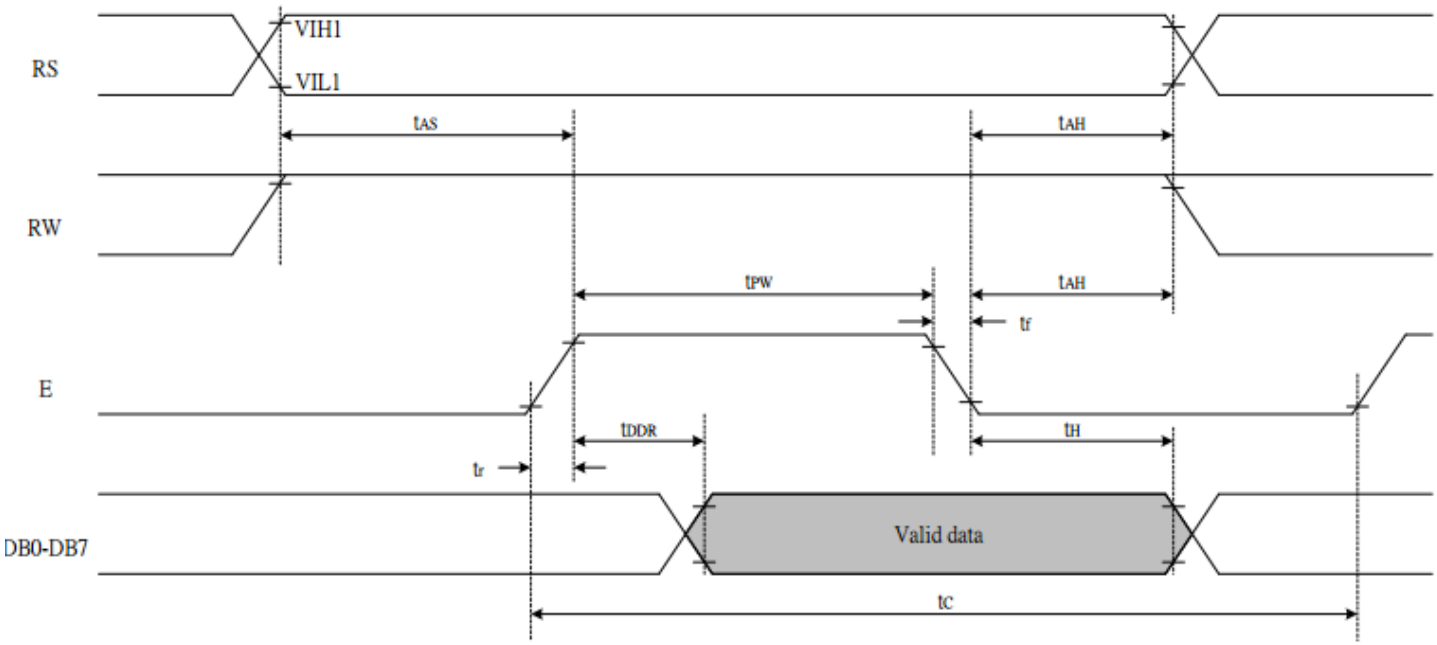

Read Mode (Reading Data from ST7066U to MPU)						
T_C	Enable Cycle Time	Pin E	1200	-	-	ns
T_{PW}	Enable Pulse Width	Pin E	140	-	-	ns
T_R, T_F	Enable Rise/Fall Time	Pin E	-	-	25	ns
T_{AS}	Address Setup Time	Pins: RS,RW,E	0	-	-	ns
T_{AH}	Address Hold Time	Pins: RS,RW,E	10	-	-	ns
T_{DDR}	Data Setup Time	Pins: DB0 - DB7	-	-	100	ns
T_H	Data Hold Time	Pins: DB0 - DB7	10	-	-	ns

Built-in Font Table

b7-b4 / b3-b0	0000	0001	0010	0011	0100	0101	0110	0111	1000	1001	1010	1011	1100	1101	1110	1111
0000	CG RAM (1)															
0001	(2)															
0010	(3)															
0011	(4)															
0100	(5)															
0101	(6)															
0110	(7)															
0111	(8)															
1000	(1)															
1001	(2)															
1010	(3)															
1011	(4)															
1100	(5)															
1101	(6)															
1110	(7)															
1111	(8)															

Example Initialization Program

8-bit Initialization:

```
/*********************************************************/
void command(char i)
{
      P1 = i;                       //put data on output Port
      D_I =0;                       //D/I=LOW : send instruction
      R_W =0;                       //R/W=LOW : Write
      E  = 1;
      Delay(1);                     //enable pulse width  >= 300ns
        E  = 0;                     //Clock enable: falling edge
}
/*********************************************************/
void write(char i)
{
      P1 = i;                       //put data on output Port
      D_I =1;                       //D/I=HIGH : send data
      R_W =0;                       //R/W=LOW : Write
      E  = 1;
      Delay(1);                     //enable pulse width  >= 300ns
      E  = 0;                       //Clock enable: falling edge
}
/*********************************************************/
void init()
{
      E = 0;
      Delay(100);                   //Wait >40 msec after power is applied
      command(0x30);                //command 0x30 = Wake up
      Delay(30);                    //must wait 5ms, busy flag not available
      command(0x30);                //command 0x30 = Wake up #2
      Delay(10);                    //must wait 160us, busy flag not available
      command(0x30);                //command 0x30 = Wake up #3
      Delay(10);                    //must wait 160us, busy flag not available
      command(0x38);                //Function set: 8-bit/2-line
      command(0x10);                //Set cursor
      command(0x0c);                //Display ON; Cursor ON
      command(0x06);                //Entry mode set
}
/*********************************************************/
```

4-bit Initialization:

```
/*********************************************************/
void command(char i)
{
      P1 = i;                       //put data on output Port
      D_I =0;                       //D/I=LOW : send instruction
      R_W =0;                       //R/W=LOW : Write
      Nybble();                     //Send Upper 4 bits
      i = i<<4;                     //Shift over by 4 bits
      P1 = i;                       //put data on output Port
      Nybble();                     //Send upper 4 bits
}
/*********************************************************/
void write(char i)
{
      P1 = i;                       //put data on output Port
      D_I =1;                       //D/I=HIGH : send data
      R_W =0;                       //R/W=LOW : Write
      Nybble();                     //Clock Upper 4 bits
      i = i<<4;                     //Shift over by 4 bits
      P1 = i;                       //put data on output Port
      Nybble();                     //Clock upper 4 bits
}
/*********************************************************/
void Nybble()
{
      E = 1;
      Delay(1);                     //enable pulse width  >= 300ns
      E = 0;                        //Clock enable: falling edge
}
/*********************************************************/
void init()
{
      P1 = 0;
      P3 = 0;
      Delay(100);                   //Wait >40 msec after power is applied
      P1 = 0x30;                    //put 0x30 on the output port
      Delay(30);                    //must wait 5ms, busy flag not available
      Nybble();                     //command 0x30 = Wake up
      Delay(10);                    //must wait 160us, busy flag not available
      Nybble();                     //command 0x30 = Wake up #2
      Delay(10);                    //must wait 160us, busy flag not available
      Nybble();                     //command 0x30 = Wake up #3
      Delay(10);                    //can check busy flag now instead of delay
      P1= 0x20;                     //put 0x20 on the output port
      Nybble();                     //Function set: 4-bit interface
      command(0x28);                //Function set: 4-bit/2-line
      command(0x10);                //Set cursor
      command(0x0F);                //Display ON; Blinking cursor
      command(0x06);                //Entry Mode set
}
/*********************************************************/
```

Quality Information

Test Item	Content of Test	Test Condition	Note
High Temperature storage	Endurance test applying the high storage temperature for a long time.	+80°C , 200 Hrs.	2
Low Temperature storage	Endurance test applying the low storage temperature for a long time.	-30°C , 200 Hrs.	1,2
High Temperature Operation	Endurance test applying the electric stress (voltage & current) and the high thermal stress for a long time.	+70°C, 200 Hrs.	2
Low Temperature Operation	Endurance test applying the electric stress (voltage & current) and the low thermal stress for a long time.	-20°C , 200 Hrs.	1,2
High Temperature / Humidity Operation	Endurance test applying the electric stress (voltage & current) and the high thermal with high humidity stress for a long time.	+60°C , 90% RH , 96 Hrs.	1,2
Thermal Shock resistance	Endurance test applying the electric stress (voltage & current) during a cycle of low and high thermal stress.	-20°C,30min -> 25°C,5min -> 70°C,30min = 1 cycle 10 cycles	
Vibration test	Endurance test applying vibration to simulate transportation and use.	10-55Hz , 1.5mm amplitude. 60 sec in each of 3 directions X,Y,Z For 15 minutes	3
Static electricity test	Endurance test applying electric static discharge.	V_S=±800V, R_S=330Ω, C_S=150pF 10 Times	

Note 1: No condensation to be observed.
Note 2: Conducted after 4 hours of storage at 25°C, 0%RH.
Note 3: Test performed on product itself, not inside a container.

Precautions for using LCDs/LCMs

See Precautions at www.newhavendisplay.com/specs/precautions.pdf

Warranty Information and Terms & Conditions

http://www.newhavendisplay.com/index.php?main_page=terms

X-ON Electronics

Largest Supplier of Electrical and Electronic Components

Click to view similar products for LCD Character Display Modules & Accessories ***category:***

Click to view products by Newhaven Display ***manufacturer:***

Other Similar products are found below :

HG9Z-AC501 HG9Z-SCI25B LCM-S01602DTRA-3 HG9Z-XC213 EA FL-10P MDLS-161612-G-LV-LED4G MDLS-81809-LV-GLED4G MDLS-20265-LV-GLED4G NMTC-S16205DFYHSAY-22 NHD-0420AZ-FSW-GBW-33V33-0 CM1644-SGR1 162A BC BW LCM-S02002DSM-Y 162D BA BC HDM24216H-2-P9XS DEM 16207 SYH-PY RC0802A1-LLG-JWVE RC0802A1-LLR-JWVE RC0802A-TIW-ESV RC1202A-BIY-CSX RC1202A-BIY-ESX RC1602A-BIW-CSV RC1602A-YHW-CSV RC1602B-GHY-CSXD RC1602B-TIW-CSV RC1602B-YHY-CSVD RC1602D-GHY-ESX RC2002A2-LLB-JSVE RC2002A-GHG-CSV RC2004A-BIW-ESX RC2004A-GHW-CSV RC2004A-LLB-JSVE RC2004A-LLH-JSV RC2004A-LLR-JSVE DEM 08171 SYH-LY DEM 08172 SYH-PY DEM16101SYH-LY DEM 16209 SBH-PW-N DEM 16210 SGH DEM 16214 FGH-PW DEM 16216 FDH-P(RGB)-N DEM16216SYH-LY DEM 16217 SYH-PY DEM 16221 SYH DEM 16221 SYH (FFCF/TR)/V DEM 16227 FGH-PW DEM 16227 SBH-PW-N DEM 16227 SYH-LY DEM 20231 SYH-PY-CYR22 DEM 20232 SBH-PW-N