OMRON

R88D-GT□

eries servo drive

o drive family for motion
ct size and integrated
K-II motion bus.

- Pulse servo drive models
- equency of 1 kHZ
- asy and quick start-up
- ssion
- ed or torque control
- and control power supply
- e positioning
- absolute encoder

phase 100 W to 1.5 kW (8.62 Nm)

AC Servo systems

guration

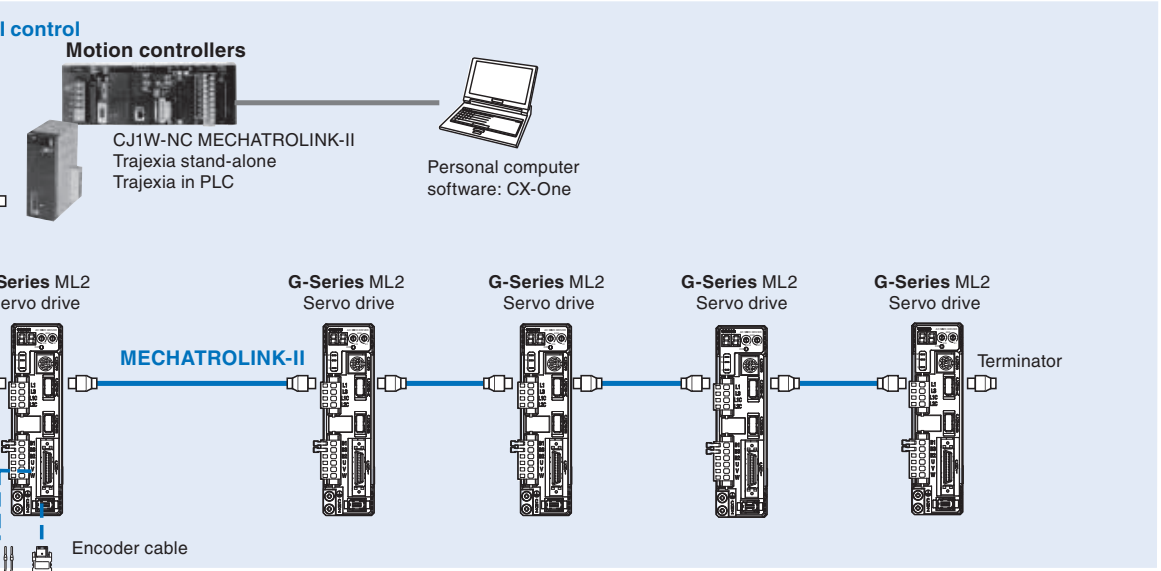

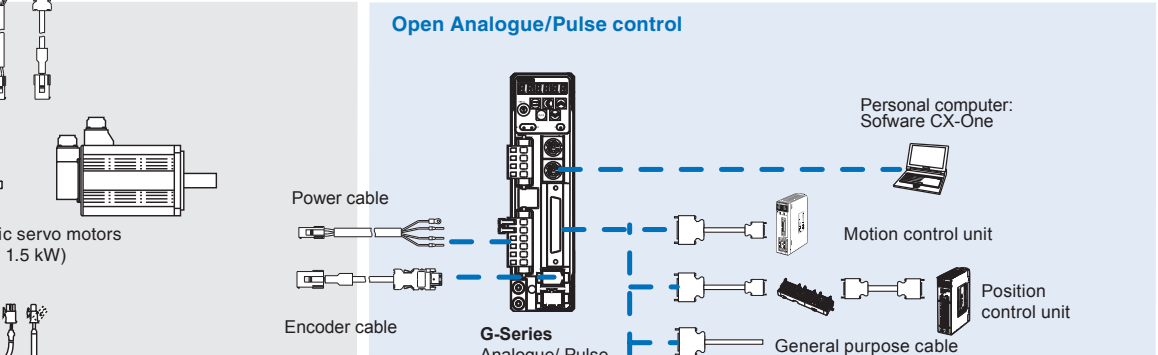

ported

Servo motor						G-Series servo drive	
	Voltage	Speed	Rated torque	Capacity	Model	MECHATROLINK-II	Analog/ Pulse
	230 V	3000 min^{-1}	0.16 Nm	50 W	R88M-G05030□-□S2	R88D-GN01H-ML2	R88D-GT01H
			0.32 Nm	100 W	R88M-G10030□-□S2	R88D-GN01H-ML2	R88D-GT01H
			0.64 Nm	200 W	R88M-G20030□-□S2	R88D-GN02H-ML2	R88D-GT02H
			1.3 Nm	400 W	R88M-G40030□-□S2	R88D-GN04H-ML2	R88D-GT04H
			2.4 Nm	750 W	R88M-G75030□-□S2	R88D-GN08H-ML2	R88D-GT08H
			3.18 Nm	1000 W	R88M-G1K030T-□S2	R88D-GN15H-ML2	R88D-GT15H
			4.77 Nm	1500 W	R88M-G1K530T-□S2	R88D-GN15H-ML2	R88D-GT15H
		2000 min^{-1}	4.8 Nm	1000 W	R88M-G1K020T-□S2	R88D-GN10H-ML2	R88D-GT10H
			7.15 Nm	1500 W	R88M-G1K520T-□S2	R88D-GN15H-ML2	R88D-GT15H
		1000 min^{-1}	8.62 Nm	900 W	R88M-G90010T-□S2	R88D-GN15H-ML2	R88D-GT15H
		3000 min^{-1}	0.32 Nm	100 W	R88M-GP10030□-□S2	R88D-GN01H-ML2	R88D-GT01H
			0.64 Nm	200 W	R88M-GP20030□-□S2	R88D-GN02H-ML2	R88D-GT02H
			1.3 Nm	400 W	R88M-GP40030□-□S2	R88D-GN04H-ML2	R88D-GT04H

R88D-GN04H-ML2

es servo drive

ype

gue/ pulse type

ork type

ty

Model

Blank: Analogue/ pulse type

ML2: MECHATROLINK-II communications

Source voltage

H: 230 V

0 W
0 W
0 W
0 W
) kW
5 kW

fications

s

R88D-G□	01H□	02H□	04H□	08H□	10H□	15H□
R88M-G□	05030□/10030□	20030□	40030□	75030□	G1K020T□	90010T□ / 1K030T□ / 1K5□0T□
R88M-GP□	10030□	20030□	40030□	-	-	-
pacity W	100	200	400	750	1000	1500
Arms	1.16	1.6	2.7	4.0	5.9	9.8
Arms	3.5	5.3	7.1	14.1	21.2	28.3
n circuit	For single-phase, 200 to 240 VAC +10 to -15% (50/60 Hz)			For single-phase/ three-phase, 200 to 240 VAC +10 to -15% (50/60 Hz)		
ntrol circuit	For single-phase, 200 to 240 VAC + 10 to -15% (50/60 Hz)					
	IGBT-driven PWM method					
	Serial encoder (incremental/absolute)					
ature	0 to +55 °C / -20 to 65 °C					
y	90% RH or less (non-condensing)					
	1000m or less above sea level					
nce	5.88 m/s^2 / 19.6 m/s^2					
	Base mounted					
Kg	0.8		1.1	1.5	1.7	

II servo drive specifications

Load variance	During 0 to 100% load ±0.01 max. (at rated speed)
Voltage variance	0% at ±10% of rated voltage (at rated speed)
Temperature variance	0 to 50ºC ±0.1% max. (at rated speed)
cteristics	1 kHz
ccuracy (reproducibility)	±3% (at 20% to 100% of rated torque)
tting	0 to 10 s (acceleration time and deceleration time can be set)
K	MECHATROLINK-II commands (for sequence, motion, data setting/reference, monitor, adjustament and other commands)
al	Emergency stop, 3 external latch signals, forward/reverse torque limit, forward/reverse run prohibit, origin proximity, 3 general-purpose inputs
nal	It is possible to output three types of signals: positioning completed, speed coincidence, rotation speed detection, servo ready, current limit, speed limit, brake release and warning signal
Interface	Personal computer
Transmission rate	From 2400 to 57600 bps
Functions	Parameter setting, status display, alarm display (monitor, clear, history), servo drive data tracing function, test run/autotuning operations, real time trace, absolute encoder setting, default values function
K Communications protocol	MECHATROLINK-II
Transmission rate	10 Mbps
Data length	32 bytes
Functions	Parameter setting, status display, alarm display (monitor, clear, history), default values function
	Horizontal and vertical axis mode. One parameter rigidity setting. Load inertia detection.
	Operates when main power OFF, servo alarm, overtravel or servo OFF
ssing	Built-in regeneration resistor in models from 750 W to 1.5 kW. External regeneration resistor optionally.
vention function	Dynamic brake, disables torque or emergency stop torque during POT and NOT operation
OP)	Emergency stop input
tion	Optional division pulses possible
	0,01<Numerator/Denominator<100
g function	8 internal speeds
	Overvoltage, undervoltage, overcurrent, overload, regeneration overload, servo drive overheat
ut	The actual servomotor speed, command speed, torque and number of accumulated pulses can be measured using an oscilloscope or other device.
Display functions	A 2-digit 7-segment LED display shows the servo drive status, alarm codes, parameters, etc.
	MECHATROLINK-II communications status LED indicator (COM)
Switches	Rotary switch for setting the MECHATROLINK-II node address

vo drive specifications

	Position, speed and torque control mode
Load variance	During 0 to 100% load ±0.01 max. (at rated speed)
Voltage variance	0% at ±10% of rated voltage (at rated speed)
Temperature dependence	0 to 50ºC ±0.1% max. (at rated speed)
istics	1 kHz
racy (reproducibility)	±3% (at 20% to 100% of rated torque)
g	0 to 10 s (acceleration time and deceleration time can be set)
Input pulse type	Signal + pulse, 90º phase displacement 2-phase pulse (phase A/B) or reverse and forward pulses (CW/CCW)
Input pulse frequency	500 kpps max. line-driver input, 200 kpps max. open-collector input
Electronic gearing	0,01<Numerator/Denominator<100
Speed reference voltage	10 VDC at 3000 r/min: set at delivery (the scale can be set by parameters)
Torque limit	3 VDC at rated torque (torque can be limited separately in positive/negative direction)
Preset speed control	Preset speed is selectable from 8 internal settings by digital inputs.
Torque reference voltage	3 VDC at rated torque: set at delivery (the scale and polarity can be set by parameters).
Speed limit	Speed limit can be set by parameter.
al	Forward/reverse run prohibit, deviation counter reset, alarm reset, control mode switch, pulse prohibited, speed selection, gain switch, zero speed designation, origin proximity
nal	Brake release, servo ready and alarm output. It is possible also to output two types of configurable signals: current limit, rotation speed detection, warning signal, speed coincidence, positioning completed

rface	Personal computer
nsmission rate	From 2400 to 57600 bps
ctions	Parameter setting, status display, alarm display (monitor, clear, history), servo drive data tracing function, test run/autotuning operations, real time trace, absolute encoder setting, default values function
rface	Communication data interface between servo drives.and personal computer.
nsmission rate	From 2400 to 57600 bps
ctions	Parameter setting, status display, alarm display (monitor, clear, history), servo drive data tracing function, test run/autotuning operations, real time trace, absolute encoder setting, default values function
	Horizontal and vertical axis mode. One parameter rigidity setting. Load inertia detection.
	Operates when main power OFF, servo alarm, overtravel or servo OFF
	Built-in regeneration resistor in models from 750 W to 1.5 kW. External regeneration resistor optionally.
n function	Dynamic brake, disables torque or emergency stop torque during POT and NOT operation
	Emergency stop input
	Optional division pulses possible
	Overvoltage, undervoltage, overcurrent, overload, regeneration overload, servo drive overheat
	The actual servomotor speed, command speed, torque and number of accumulated pulses can be measured using an oscilloscope or other device.
play functions	A 6-digit 7-segment LED display shows the servo drive status, alarm codes, parameters, etc.
tches	Unit No. switch for serial communications. Value from 0 to F. To identify which servo drive the computer is accesing in RS232 communications when multiple servo drives.

es

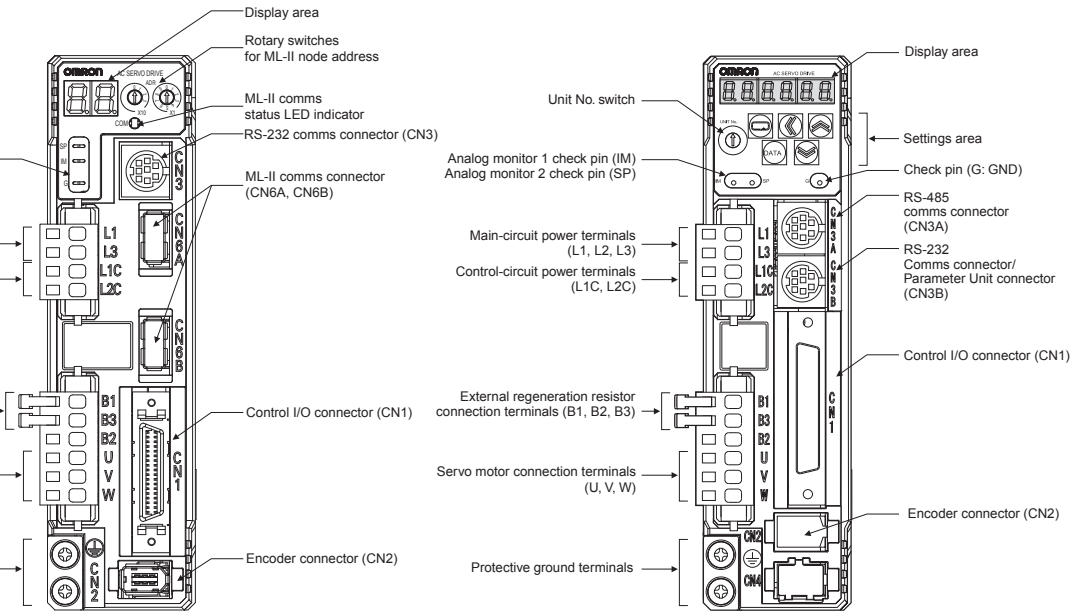

MECHATROLINK-II servo drive

Analogue/ pulse servo drive

ector (CNA) specifications

	Name	Function
	Main circuits power supply input	AC power input terminals for the main circuit **Note:** for single-phase connect the power supply input to L1 and L3
	Control circuit power supply input	AC power input terminals for the control circuit

ector (CNB) specifications

	Name	Function	
	External regeneration resistor connection terminals	Up to 400 W:	If regenerative energy is high, connect an external regeneration resistor between B1 and B2.
		From 750 W to 1.5kW:	Normally B2 and B3 are connected. If regenerative energy is high, remove the short-circuit bar between B2 and B3 and connect an external regeneration resistor between B1 and B2.
	Servo motor connection terminals	Terminals for outputs to the servomotor.	
	Frame ground	Ground terminal. Ground to 100Ω or less.	

- Input signals (for MECHATROLINK-II servo drives)

me	Function	
	Control power supply input for sequence signals: users must provide the +24 V power supply. Allowable voltage range: 12 to 24 VDC	
	Emergency Stop Input	Input for emergency stop. Emergency stop function factory default: enable.
	External Latch Signals	This external signal input latches the current value feedback pulse counter. Minimal signal width must be 1 ms.
	External general-purpose Input 0	This input is used as external general-purpose input.
	External general-purpose Input 1	
	External general-purpose Input 2	
	Forward Torque Limit Input	This signal input selects the torque limit.
	Reverse Torque Limit Input	
	Forward Run Prohibit Input	Forward/ reverse drive rotation overtravel input. Stops servomotor when movable part travels beyond the allowable range of motion.
	Reverse Run Prohibit Input	
	Origin Proximity Input	Connect the origin proximity input signal in the origin search operation.
	Battery backup input for absolute encoder	Connecting pin for the absolute backup battery. Do not connect when a battery is connected to the servomotor encoder cable.

- output signals (for MECHATROLINK-II servo drives)

me	Function
	The output turns OFF when an alarm is generated in the Servo drive.
	General-purpose output. The fucntion for this output is selected by changing the parameter: INP1 (Positioning completed), VCMP (Speed conformity signal), TGON (Servomotor rotation speed detection), READY (Servo ready), CLIM (Current limit detection), VLIM (Speed limit detection), BKIR (Brake interlock), WARN (Warning signal)
OM	
OM	
OM	

- Input signals (for analog/pulse servo drives)

ode	Signal name	Function
	+24 VCW	Reference pulse input for line driver and open collector according to parameter setting. Input mode: Sign + pulse string Reverse/forward pulse (CCW/CW pulse) Two-phase pulse (90° phase differential)
	+CW	
	-CW	
	+24 VCW	
	+CCW	
	-CCW	
	+CWLD	Reference pulse input for line driver only. Input mode: Reverse/forward pulse (CW/CCW pulse)
	-CWLD	
	+CCWLD	
	-CCWLD	
	REF	Speed reference input: ±10 V/rated motor speed (input gain can be modified using a parameter).

Signal name	Function	
+24 VIN	Control power supply input for sequence signals: users must provide the +24 V power supply (12 to 24 V).	
RUN	Servo ON: this turn ON the servo.	
DFSEL	Vibration filter switching	Enables vibration filter according parameter setting.
PNSEL	Speed command rotation direction switch	
VZERO	Zero speed designation	Speed command is regarder as 0. This function is enable/disabled by parameter.
GSEL	Gain switching	Enables gain value according parameter setting.
TLSEL	Torque limit switch.	
GESEL	Electronic gear switching	Switches the numerator fro electronic gear ratio.
VSEL3	Internal speed selection 3	Input to select the desired speed setting during internally speed operation. The speed selecton is combining this input with VSEL1 and VSEL2 inputs.
ECRST	Error counter reset input.	Resets the position error counter.
VSEL2	Internal speed selection 2	Input to select the desired speed setting during internally speed operation. The speed selecton is combining this input with VSEL1 and VSEL3 inputs.
RESET	Alarm reset input.	Release the alarm status. The error counter is reset when the alarm is reset.
TVSEL	Control mode switching	Position ↔ speed Position ↔ torque Torque ↔ speed } Enables control mode switching
IPG	Pulse prohibition input. Digital input to inhibit the position reference pulse.	
VSEL1	Internal speed selection 1	Input to select the desired speed setting during internally speed operation. The speed selecton is combining this input with VSEL2 and VSEL3 inputs.
NOT	Reverse run prohibited	Overtravel prohibited: stops servomotor when movable part travels beyond the allowable range of motion.
POT	Forward run prohibited	
SEN	Sensor ON input. Initial data request signal when using an absolute encoder.	
SENGND	Sensor ON signal ground.	
BAT (+)	Backup battery connection terminals when the absolute encoder power is interrupted. Do not connect when an absolute encoder battery cable for backup is used.	
BATGND (-)		
FG	Frame ground	

tput signals (for analog/pulse servo drives)

gnal name	Function	
A	Encoder phase A+	Encoder signals are output according Encoder Dividing Numerator parameter. This is the line-driver output (equivalent to R422).
	Encoder phase A-	
B	Encoder phase B+	
	Encoder phase B-	
Z	Encoder phase Z+	
	Encoder phase Z-	
	Encoder phase-Z output	Phase Z is output for encoder signals. Open-collector output.
COM	Encoder phase-Z common	
BKIR	Brake release signal output	Timing signal for operating the electromagnetic brake on a motor.
BKIRCOM		
READY	Servo ready: ON if there is not servo alarm when the control/main circuit power supply is turned ON.	
READYCOM		
ALM	Servo alarm: turns OFF when an error is detected.	
ALMCOM		
AGON	Motor rotation speed detection. This output turns ON when the motor rotation speed reaches the speed set in a parameter.	
AGONCOM		
INP	Positioning complete output: turns ON when position error is equal to setting parameter.	
INPCOM		
INP2	Position complete output 2	The function of output signals allocated to pins 11,10, 34 to 39 can be changed with these options by parameters settings.
PCMD	Position command status	
ZSP	Zero speed	
WARN1	Warning 1	
WARN2	Warning 2	
ALM-ATB	Alarm output	
SCMP	Speed conformity output	
SCMD	speed command status	
VLIMIT	Speed limit detection	
TLIMIT	Torque limit detection	
OUTM1	General-purpose Output 1	Use the parameter settings to assign the desired function
OUTM2	General-purpose Output2	
COM	General-purpose common	Output ground common

ML2, R88D-GT01/02H (200 V, 100 to 200 W)

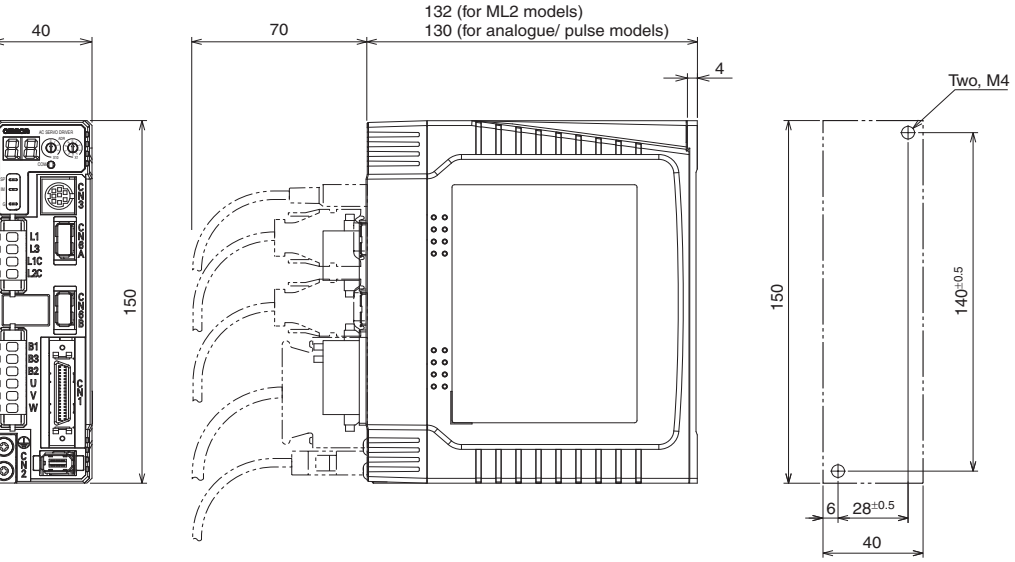

2, R88D-GT04H (200 V, 400 W)

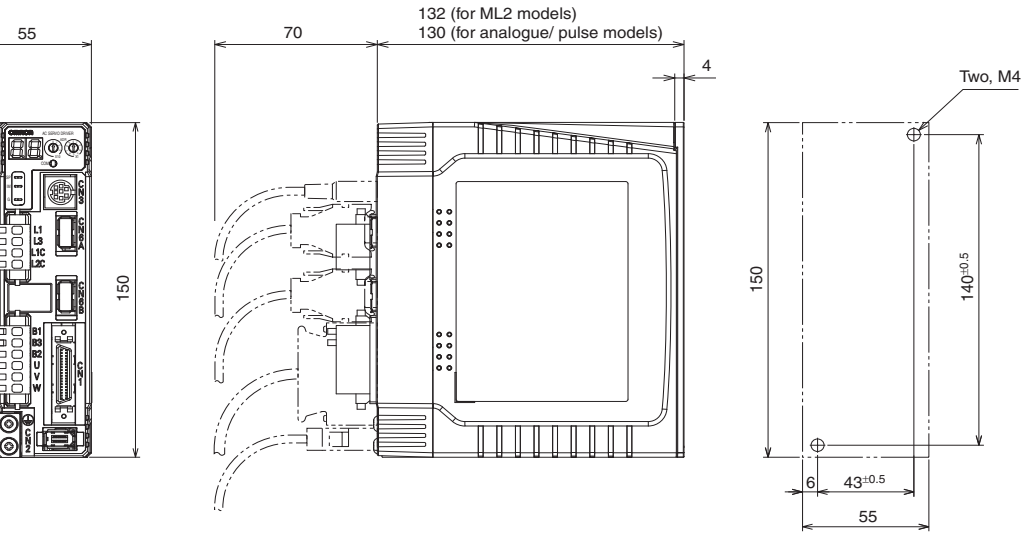

2, R88D-GT08H (200 V, 750 W)

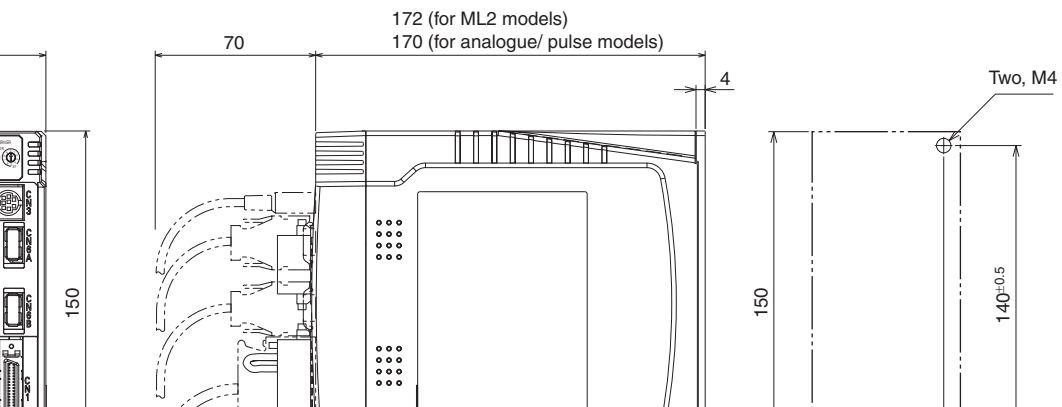

R88D-GT10/15H (200 V, 1 kW to 1,5 kW)

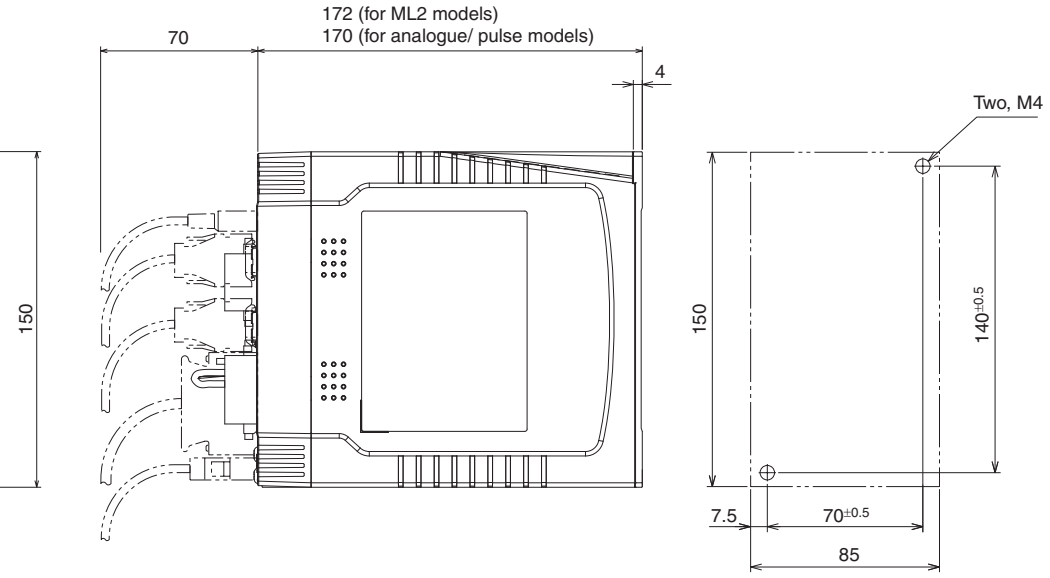

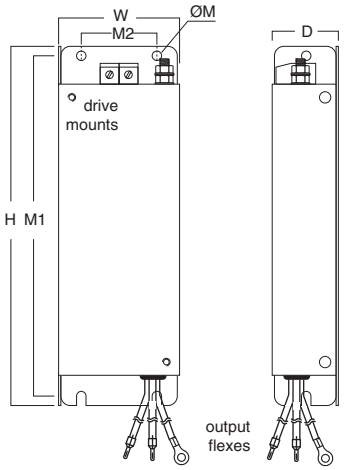

urrent	Leakage current	External dimensions			Mount dimensions		FIlter Fixing	Rated voltage
		H	W	D	M1	M2		
	3.5 mA	190	42	44	180	20	M4	250 VAC single-phase
	3.5 mA	190	57	30	180	30	M4	
	3.5 mA	190	64	35	180	40	M4	
	3.5 mA	190	86	35	180	60	M4	

VAC

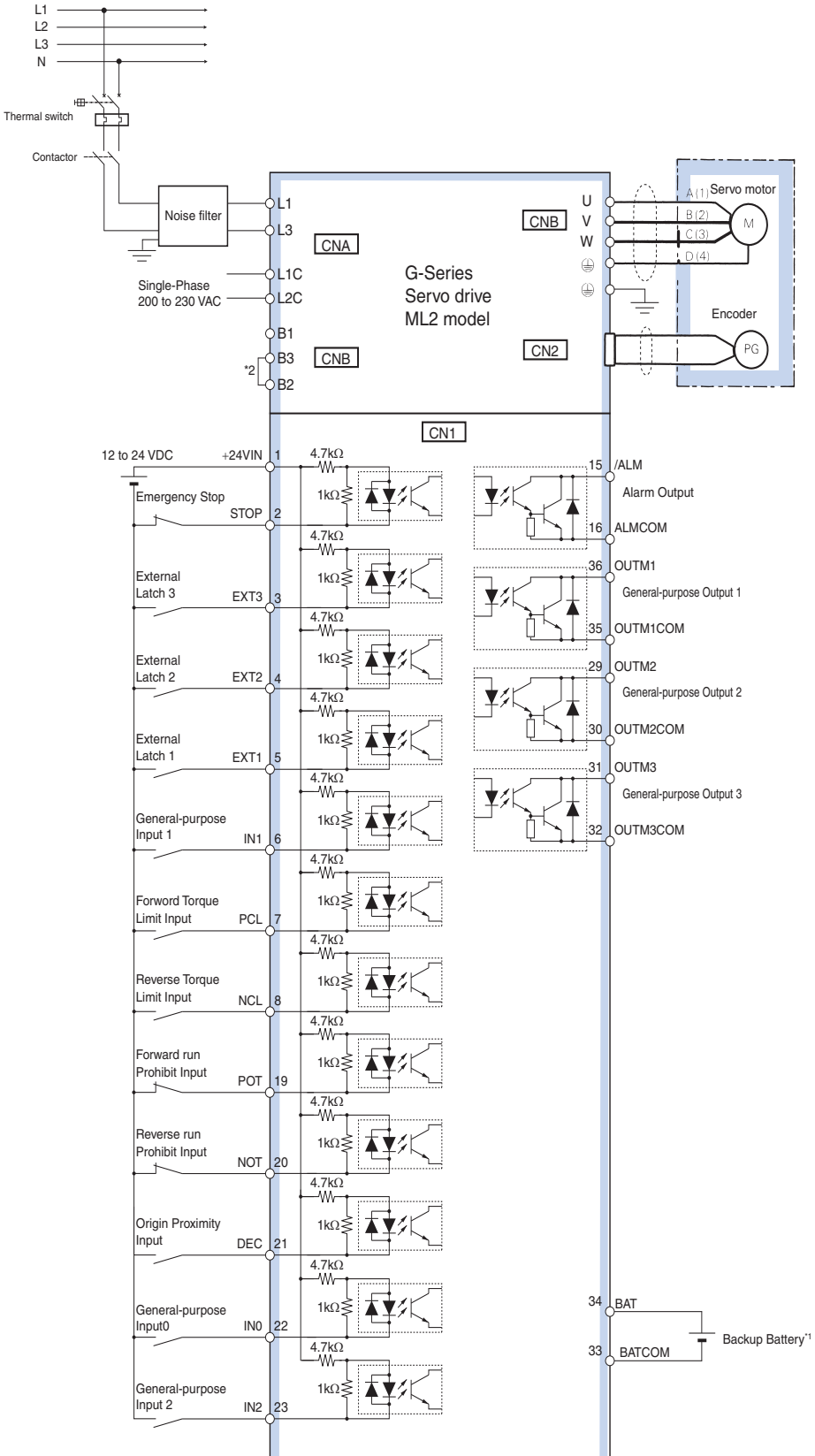
L1
L2
L3
N
Thermal switch
Contactor
Noise filter
Single-Phase
200 to 230 VAC
L1
L3
L1C
L2C
B1
B3
B2
*2
CNA
CNB
G-Series
Servo drive
ML2 model
CNB
CN2
CN1
U
V
W
A (1)
B (2)
C (3)
D (4)
Servo motor
M
Encoder
PG
12 to 24 VDC
+24VIN 1
Emergency Stop
STOP 2
External
Latch 3
EXT3 3
External
Latch 2
EXT2 4
External
Latch 1
EXT1 5
General-purpose
Input 1
IN1 6
Forword Torque
Limit Input
PCL 7
Reverse Torque
Limit Input
NCL 8
Forward run
Prohibit Input
POT 19
Reverse run
Prohibit Input
NOT 20
Origin Proximity
Input
DEC 21
General-purpose
Input0
IN0 22
General-purpose
Input 2
IN2 23
4.7kΩ
1kΩ
15 /ALM
Alarm Output
16 ALMCOM
36 OUTM1
General-purpose Output 1
35 OUTM1COM
29 OUTM2
General-purpose Output 2
30 OUTM2COM
31 OUTM3
General-purpose Output 3
32 OUTM3COM
34 BAT
33 BATCOM
Backup Battery*1

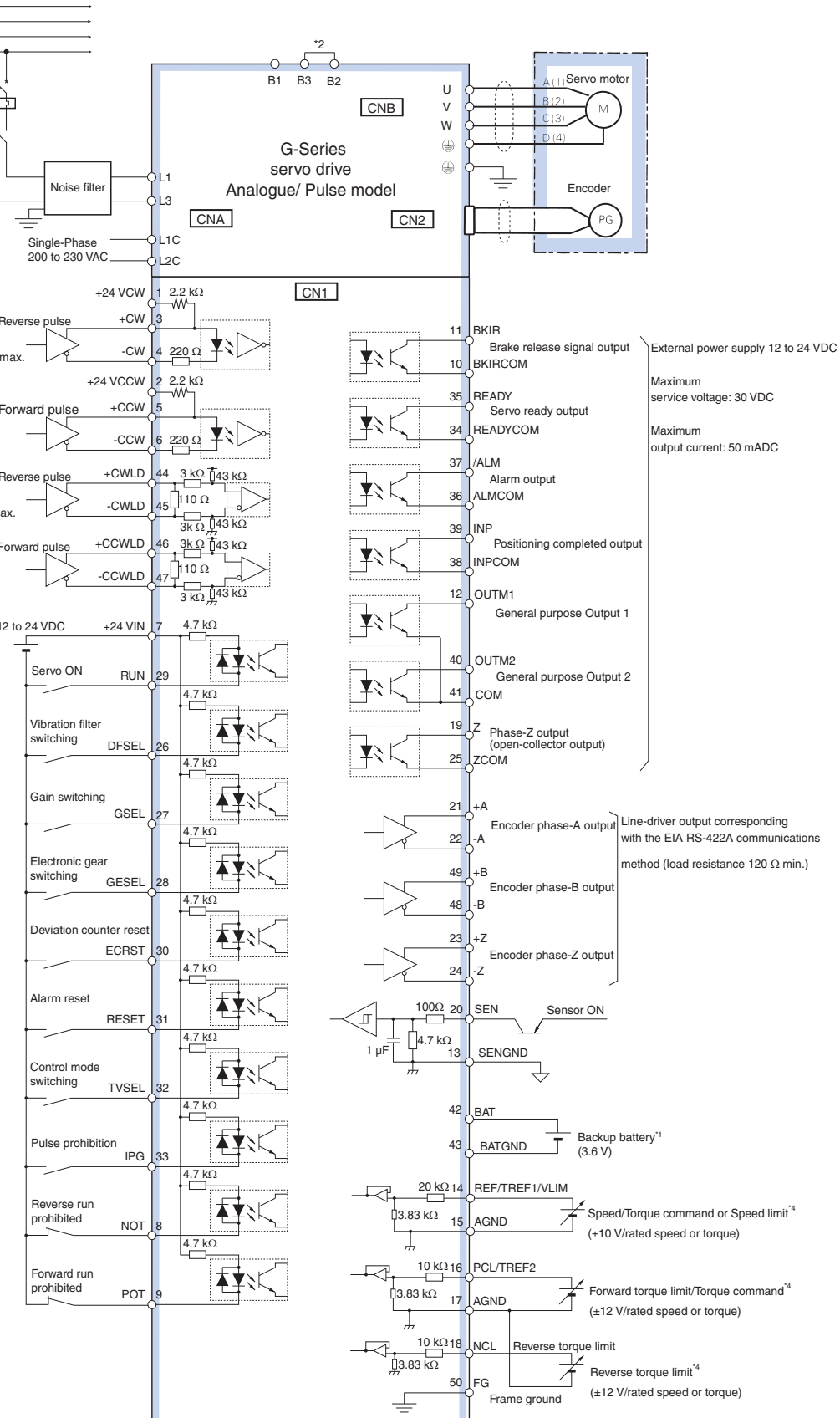

G-Series
servo drive
Analogue/ Pulse model
CNA
CNB
CN1
CN2
Noise filter
Single-Phase
200 to 230 VAC
L1
L3
L1C
L2C
B1
B3
B2
*2
U
V
W
Servo motor
A (1)
B (2)
C (3)
D (4)
M
Encoder
PG
+24 VCW
+CW
-CW
+24 VCCW
+CCW
-CCW
+CWLD
-CWLD
+CCWLD
-CCWLD
2.2 kΩ
220 Ω
3 kΩ
43 kΩ
110 Ω
3k Ω
+24 VIN
4.7 kΩ
Servo ON
RUN
Vibration filter switching
DFSEL
Gain switching
GSEL
Electronic gear switching
GESEL
Deviation counter reset
ECRST
Alarm reset
RESET
Control mode switching
TVSEL
Pulse prohibition
IPG
Reverse run prohibited
NOT
Forward run prohibited
POT
BKIR
Brake release signal output
BKIRCOM
READY
Servo ready output
READYCOM
/ALM
Alarm output
ALMCOM
INP
Positioning completed output
INPCOM
OUTM1
General purpose Output 1
OUTM2
General purpose Output 2
COM
Z
Phase-Z output
(open-collector output)
ZCOM
External power supply 12 to 24 VDC
Maximum
service voltage: 30 VDC
Maximum
output current: 50 mADC
+A
Encoder phase-A output
-A
+B
Encoder phase-B output
-B
+Z
Encoder phase-Z output
-Z
Line-driver output corresponding
with the EIA RS-422A communications
method (load resistance 120 Ω min.)
100Ω
SEN
Sensor ON
1 μF
SENGND
BAT
BATGND
Backup battery*1
(3.6 V)
20 kΩ
REF/TREF1/VLIM
3.83 kΩ
AGND
Speed/Torque command or Speed limit*4
(±10 V/rated speed or torque)
10 kΩ
PCL/TREF2
Forward torque limit/Torque command*4
(±12 V/rated speed or torque)
NCL
Reverse torque limit
Reverse torque limit*4
(±12 V/rated speed or torque)
FG
Frame ground

rmation

TROLINK-II model reference configuration

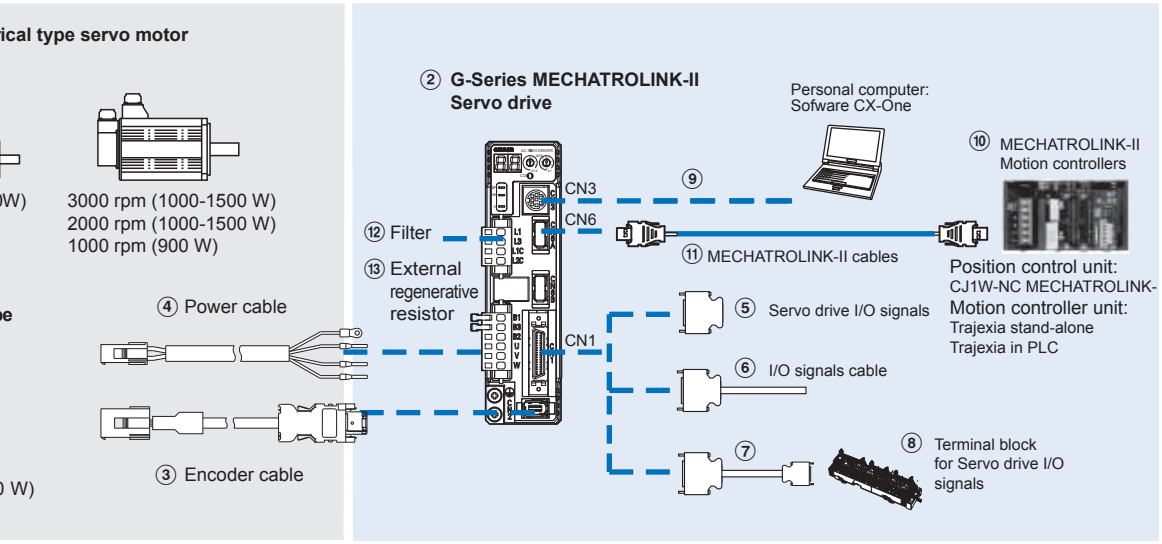

①②③④⑤... show the recommended sequence to select the components in a G-Series servo system

wer & encoder cables

to the G-Series servo motor chapter for servomotor, motor cables or connectors selection

drive model	① Compatible rotary servo motors	
	Cylindric type	Flat type
GN01H-ML2	R88M-G05030□	R88M-GP10030□
	R88M-G10030□	
GN02H-ML2	R88M-G20030□	R88M-GP20030□
GN04H-ML2	R88M-G40030□	R88M-GP40030□
GN08H-ML2	R88M-G75030□	-
GN10H-ML2	R88M-G1K020T□	-
GN15H-ML2	R88M-G90010T□	-
	R88M-G1K030T□	-
	R88M-G1K520T□	-
	R88M-G1K530T□	-

CN1)

	Connect to		Model
kit	Servo drive I/O signals	-	R88A-CNU01C
se cable		1 m	R88A-CPGB001S-E
		2 m	R88A-CPGB002S-E
cable		1 m	XW2Z-100J-B33
		2 m	XW2Z-200J-B33
		-	XW2B-20G4
			XW2B-20G5
			XW2D-20G6

CN3)

		Model
e RS232	2 m	R88A-CCG002P2

Motion controllers

	Model
alone motion controller	TJ2-MC64 (64 axes)
	TJ1-MC16 (16 axes)
	TJ1-MC04 (4 axes)
motion controller	CJ1W-MCH72 (30 axes)

MECHATROLINK-II cables (for CN6)

Symbol	Specifications	Length	Model
⑪	MECHATROLINK-II Terminator resistor	-	JEPMC-W6022-E
	MECHATROLINK-II cables	0.5 m	JEPMC-W6003-A5-E
		1 m	JEPMC-W6003-01-E
		3 m	JEPMC-W6003-03-E
		5 m	JEPMC-W6003-05-E
		10 m	JEPMC-W6003-10-E
		20 m	JEPMC-W6003-20-E
		30 m	JEPMC-W6003-30-E

Filters

Symbol	Applicable servodrive	Filter model	Rated current	Leak-age current	Rated voltage
⑫	R88D-GN01H□ R88D-GN02H□	R88A-FIK102-RE	2.4 A	3.5 mA	250 VAC single-phase
	R88D-GN04H□	R88A-FIK104-RE	4.1 A	3.5 mA	
	R88D-GN08H□	R88A-FIK107-RE	6.6 A	3.5 mA	
	R88D-GN10H□ R88D-GN15H□	R88A-FIK114-RE	14.2 A	3.5 mA	

External regenerative resistor

Symbol	Regenerative resistor unit model	Specifications
⑬	R88A-RR08050S	50 Ω, 80 W
	R88A-RR080100S	100 Ω, 80 W
	R88A-RR22047S	47 Ω, 220 W
	R88A-RR50020S	20 Ω, 500 W

Computer software

Specifications	Model
Configuration and monitoring software tool for servo drives and inverters. (CX-drive version 1.70 or higher)	CX-drive
Complete OMRON software package including CX-drive. (CX-One version 3.10 or higher)	CX-One

tion

e model reference configuration

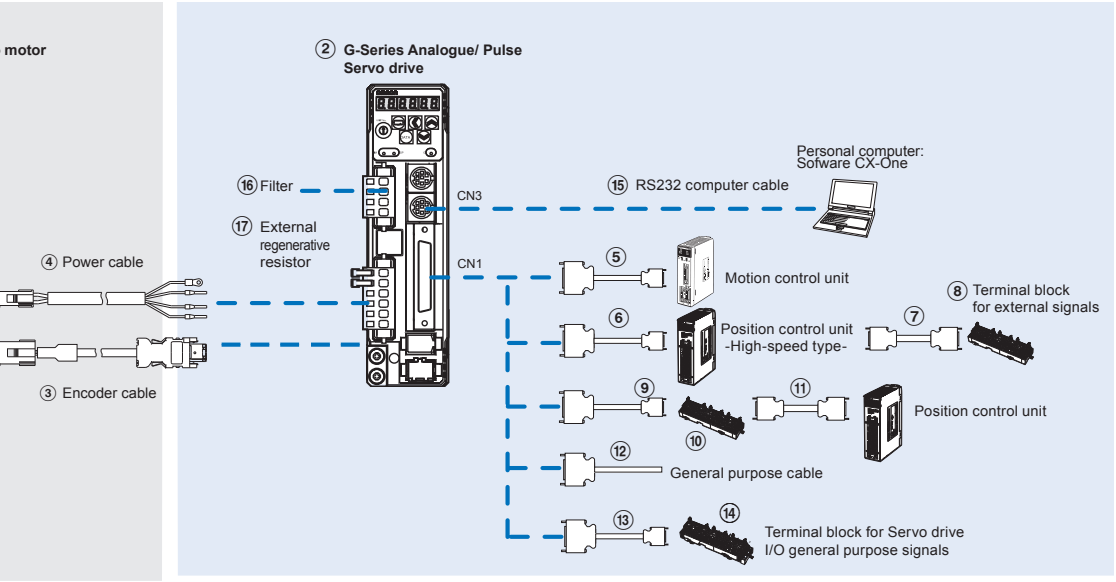

③④⑤... show the recommended sequence to select the components in a G-Series servo system

& encoder cables

e G-Series servo motor chapter for servomotor, motor cables or connectors selection

	Servo drive model	① Compatible rotary servo motors	
		Cylindric type	Flat type
0 W	R88D-GT01H	R88M-G05030□	R88M-GP10030□
		R88M-G10030□	
0 W	R88D-GT02H	R88M-G20030□	R88M-GP20030□
0 W	R88D-GT04H	R88M-G40030□	R88M-GP40030□
0 W	R88D-GT08H	R88M-G75030□	-
0 kW	R88D-GT10H	R88M-G1K020T□	-
5 kW	R88D-GT15H	R88M-G90010T□	-
		R88M-G1K030T□	-
		R88M-G1K520T□	-
		R88M-G1K530T□	-

	Connect to		Model
	Motion control units CS1W-MC221 CS1W-MC421	1 m	R88A-CPG001M1
		2 m	R88A-CPG002M1
		3 m	R88A-CPG003M1
		5 m	R88A-CPG005M1
	Motion control units CS1W-MC221 CS1W-MC421	1 m	R88A-CPG001M2
		2 m	R88A-CPG002M2
		3 m	R88A-CPG003M2
		5 m	R88A-CPG005M2
or 1 axis)	Position control units (high-speed type) CJ1W-NC234 CJ1W-NC434	1 m	XW2Z-100J-G9
		5 m	XW2Z-500J-G9
		10 m	XW2Z-10MJ-G9
ut for 1 axis)	Position control units (high-speed type) CJ1W-NC214 CJ1W-NC414	1 m	XW2Z-100J-G13
		3 m	XW2Z-300J-G13
or 2 axis)	Position control units (high-speed type) CJ1W-NC234 CJ1W-NC434	1 m	XW2Z-100J-G1
		5 m	XW2Z-500J-G1
		10 m	XW2Z-10MJ-G1
ut for 2 axis)	Position control units (high-speed type) CJ1W-NC214 CJ1W-NC414	1 m	XW2Z-100J-G5
		3 m	XW2Z-300J-G5

	Connect to		Model
k cable for external signals mon, forward/reverse run prohibited inputs, op input, origin proximity input and interrupt in-	Position control units (high-speed type) CJ1W-NC234 CJ1W-NC434 CJ1W-NC214 CJ1W-NC414	0.5 m	XW2Z-C50X
		1 m	XW2Z-100X
		2 m	XW2Z-200X
		3 m	XW2Z-300X
		5 m	XW2Z-500X
		10 m	XW2Z-010X
k for external signals (M3 screw, pin terminals)		-	XW2B-20G4
k for ext. signals (M3.5 screw, fork/round terminals)		-	XW2B-20G5
k for ext. signals (M3 screw, fork/round terminals)		-	XW2D-20G6
rvo relay unit to servo drive	CS1W-NC1□3, CJ1W-NC1□3, C200HW-NC113, CS1W-NC2□3/4□3, CJ1W-NC2□3/4□3, C200HW-NC213/413, CQM1H-PLB21 or CQM1-CPU43	1 m	XW2Z-100J-B25
		2 m	XW2Z-200J-B25
	CJ1M-CPU21/22/23	1 m	XW2Z-100J-B31
		2 m	XW2Z-200J-B31
it	Position control units CS1W-NC1□3, CJ1W-NC1□3 or C200HW-NC113	-	XW2B-20J6-1B (1 axis)
	Position control units CS1W-NC2□3/4□3, CJ1W-NC2□3/4□3 or C200HW-NC213/413	-	XW2B-40J6-2B (2 axes)
	CQM1H-PLB21 or CQM1-CPU43	-	XW2B-20J6-3B (1 axis)
	CJ1M-CPU21/22/23	-	XW2B-20J6-8A (1 axis) XW2B-40J6-9A (2 axes)
ol unit ble	CQM1H-PLB21 or CQM1-CPU43	0.5 m	XW2Z-050J-A3
		1 m	XW2Z-100J-A3
	CS1W-NC113 or C200HW-NC113	0.5 m	XW2Z-050J-A6
		1 m	XW2Z-100J-A6
	CS1W-NC213/413 or C200HW-NC213/413	0.5 m	XW2Z-050J-A7
		1 m	XW2Z-100J-A7
	CS1W-NC133	0.5 m	XW2Z-050J-A10
		1 m	XW2Z-100J-A10
	CS1W-NC233/433	0.5 m	XW2Z-050J-A11
		1 m	XW2Z-100J-A11
	CJ1W-NC113	0.5 m	XW2Z-050J-A14
		1 m	XW2Z-100J-A14
	CJ1W-NC213/413	0.5 m	XW2Z-050J-A15
		1 m	XW2Z-100J-A15
	CJ1W-NC133	0.5 m	XW2Z-050J-A18
		1 m	XW2Z-100J-A18
	CJ1W-NC233/433	0.5 m	XW2Z-050J-A19
		1 m	XW2Z-100J-A19
	CJ1M-CPU21/22/23	0.5 m	XW2Z-050J-A33
		1 m	XW2Z-100J-A33
se cable	For general purpose controllers	1 m	R88A-CPG001S
		2 m	R88A-CPG002S
k cable	For general purpose controllers	1 m	XW2Z-100J-B24
		2 m	XW2Z-200J-B24
k (M3 screw and for pin terminals)		-	XW2B-50G4
k (M3.5 screw and for fork/round terminals)		-	XW2B-50G5
k (M3 screw and for fork/round terminals)		-	XW2D-50G6

CN3)

		Model
e RS232	2 m	R88A-CCG002P2

ble ve	Filter model	Rated current	Leak-age current	Rated voltage
T01H T02H	R88A-FIK102-RE	2.4 A	3.5 mA	250 VAC single-phase
T04H	R88A-FIK104-RE	4.1 A	3.5 mA	
T08H	R88A-FIK107-RE	6.6 A	3.5 mA	
T10H T15H	R88A-FIK114-RE	14.2 A	3.5 mA	

e resistor

rative resistor unit model	Specifications

Connectors

Specifications	Model
I/O connector kit, 50 pins (for CN1)	R88A-CNU11C

Computer software

Specifications	Model
Configuration and monitoring software tool for servo drives and inverters. (CX-drive version 1.70 or higher)	CX-drive
Complete OMRON software package including CX-drive. (CX-One version 3.10 or higher)	CX-One

X-ON Electronics

Largest Supplier of Electrical and Electronic Components

Click to view similar products for AC, DC & Servo Motors ***category:***

Click to view products by Omron ***manufacturer:***

Other Similar products are found below :

805470B40040MY R88M-G10030H-S2 R88MK15K015CS2 R88MK1K520HS2 R88MK3K030FBS2 R88MK1K530HBS2 R88MK75030TS2 1032 M4E068-CF01-01 80510503 805470A403.6MY 805470B40020MY 80627003 82800003 82830009 R88MK2K030FS2 KDE4014XF-380 (D5) R88A-RG08UA 82810017 82861019 89850008 R88M-K75030H R88M-G10030L-OS2 R88M-GP20030L-OS2 R88M-K90010F-S2 R88M-GP40030L-OS2 R88M-K1K030H-S2 R88M-GP20030H-BO R88M-G10030L-BO R88M-GP20030S-OS2 R88M-K20030H-B R88M-G40030H-BS2 R88M-GP20030H-O R88M-G40030T-S2 R88M-K10030L 82840003 82840004 R88M-GP20030L R88M-GP20030H-BS2 R88M-GP10030S R88M-GP20030L-S2 R88M-G40030H R88M-GP20030L-O R88M-GP20030L-BS2 R88M-GP20030T-OS2 82869011 89850007 R88M-K1K020F 82524021 R88M-K1K520F