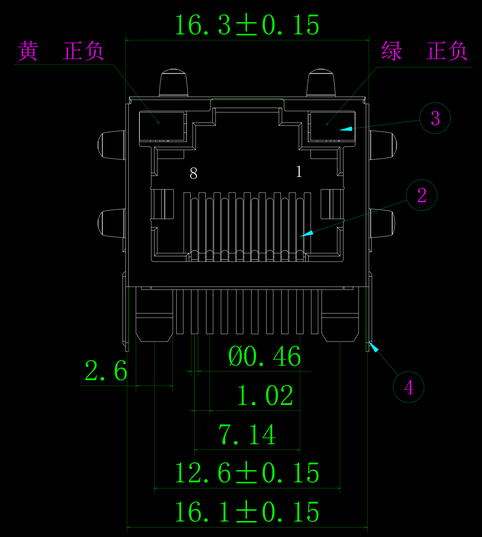

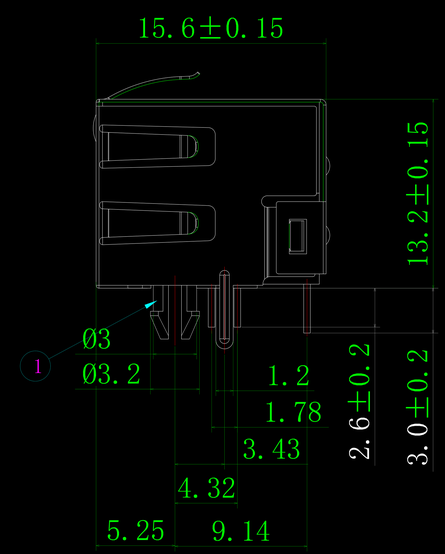

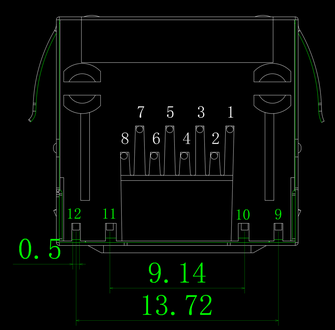

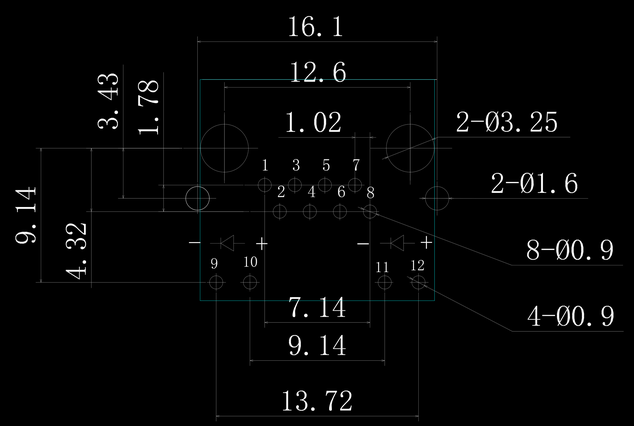

PCB LAYOUT
RECOMMENDED

技术参数 (SPECIFICATION):

温度范围 (TEMPERATURE RANGE):-40～+70℃
额定电压 (VOLTAGE RATING):125V
额定电流 (CURRENT RATING):1.5A
接触电阻 (CONTACT RESISTANCE):≤30mΩ
绝缘电阻 (INSULATION RESISTANCE):≥500MΩ
耐　压 (DIELECTRIC STRENGTH):500V AC/(50HZ)/Min
插拔力 (MATING AND UNMATING FORCE):3～20N
寿　命 (DURABILITY):750 CYCLES MIN

Table 1

X	Terminal Plating
0	Au Fu" Plating
1	Au 1u" Plating
2	Au 2u" Plating
3	Au 3u" Plating
4	Au 6u" Plating
5	Au 10u" Plating
6	Au 15u" Plating
7	Au 30u" Plating

Material & Plating

Table 4

X	MOULD
N	NEW MOULD
O	OLD MOULD

MOULD

Part NO.:
RCH5631-DD-X-XX-X

LED position
Table 2

D	L LED/R LED
YG	YELLOW/GREEN
GY	GREEN/YELLOW
YY	YELLOW/YELLOW
GG	GREEN/GREEN
OO	OTHER/OTHER

Material & Color
Table 3

XX	Material/Color
BB	PBT/BLACK
BW	PBT/WHITE
AB	PA/BLACK
AW	PA/WHITE
OO	OTHER/OTHER

序号	名　称	材　料	数　量	镀层/颜色	备　注
4	外　壳	H62	1	NI	
3	LED灯	树脂/FE	2	NI/AG	
2	插　针	PHOSPHOR BRONZE	8	"FU"	
1	塑　座	PA46	1	BLACK	

温州瑞川电子有限公司
WEN ZHOU RUI CHUAN ELECTRONIC CO., LTD.

网络插座外形图

一般公差	
30～	±0.25
10～30	±0.20
～10	±0.15
角　度:	±2°
页　面:	1 of 1

绘　图:		日　期:	
审　核:		日　期:	
核　准:		日　期:	

品　名:	RCH-56-31(带灯带弹)
料　号:	RC01061
型　号:	RJ45
图　号:	
版本:	
单位:mm	
比例: 1:1	
纸张: A4	

版次	变更履历	变更单号	绘制	日期
A/0	新出版发行			

禁止在图面上随意涂改

该图面供温州瑞川电子有限公司内部使用,不得私自复印

X-ON Electronics

Largest Supplier of Electrical and Electronic Components

Click to view similar products for rch ***manufacturer:***

Other Similar products are found below :

RC01412 RC02609 RC01251 RC02515 RC01061 RC01227 RC00117 RC01459 RC01852 RC02117 RC00116 RC00156 RC01937 RC00222 RC01132 RC02123 RC01515 RC01081 RC02014 RC02434 RC00991 RC01928 RC01248 RC01455 RC01812 RC01834 RC02408 WR00013 RC02115 RC01789 RC40012 RC01077 RC01605 RC01723 RC01736 RC01835 RC02327 RC02405 RC01606 RC02301 RC02624 RC01185 RC01448