1. Scope :

This specification applies for the RMS series of Anti-Sulfurated thick film chip resistors made by TA-I.

2. Construction:

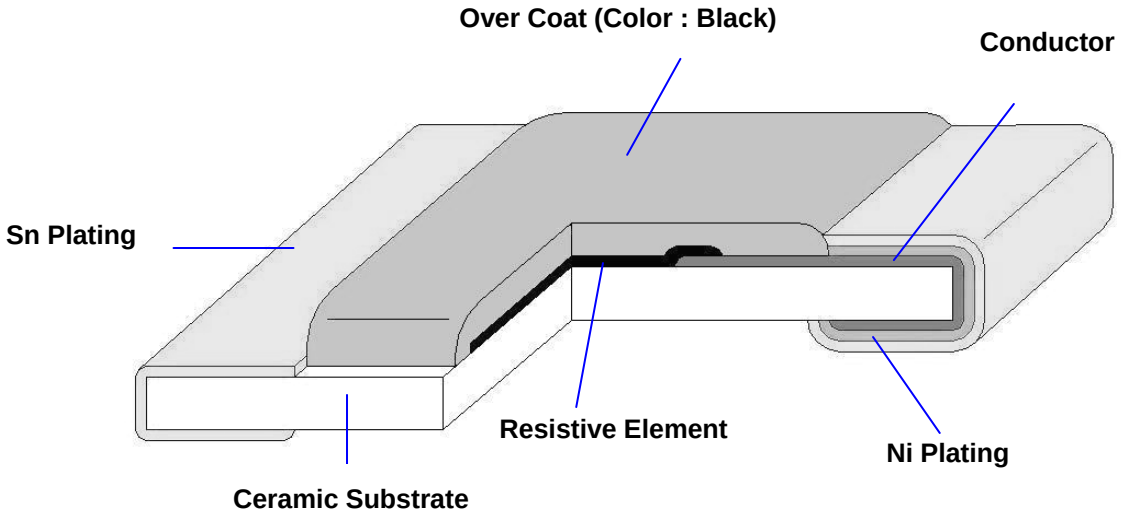

3. Type Designation:

RMS	10	J	T	103
Product Code RMS : Anti-Sulfurated Chip Resistor	Size Power Rating	Tolerance	Packaging	Nominal Resistance

02-0201(0603) 1/20W 04-0402(1005) 1/16W 06-0603(1608) 1/10W 10-0805(2012) 1/8W 12-1206(3216) 1/4W 13-1210(3226) 1/3W 20-2010(5025) 1/2W 25-2512(6432) 1 W	J-±5% G-±2% F-±1% D-0.5%	T-Paper Tape E-Embossed Tape Special L : 06 – 2mm pitch paper Tape	3 digits, e.g.,: (E-24) 103 = 10kΩ 0 = 0Ω 4 digits, e.g., : (E-96) 1540 = 154Ω 43R2 = 43.2Ω

4. Dimensions :

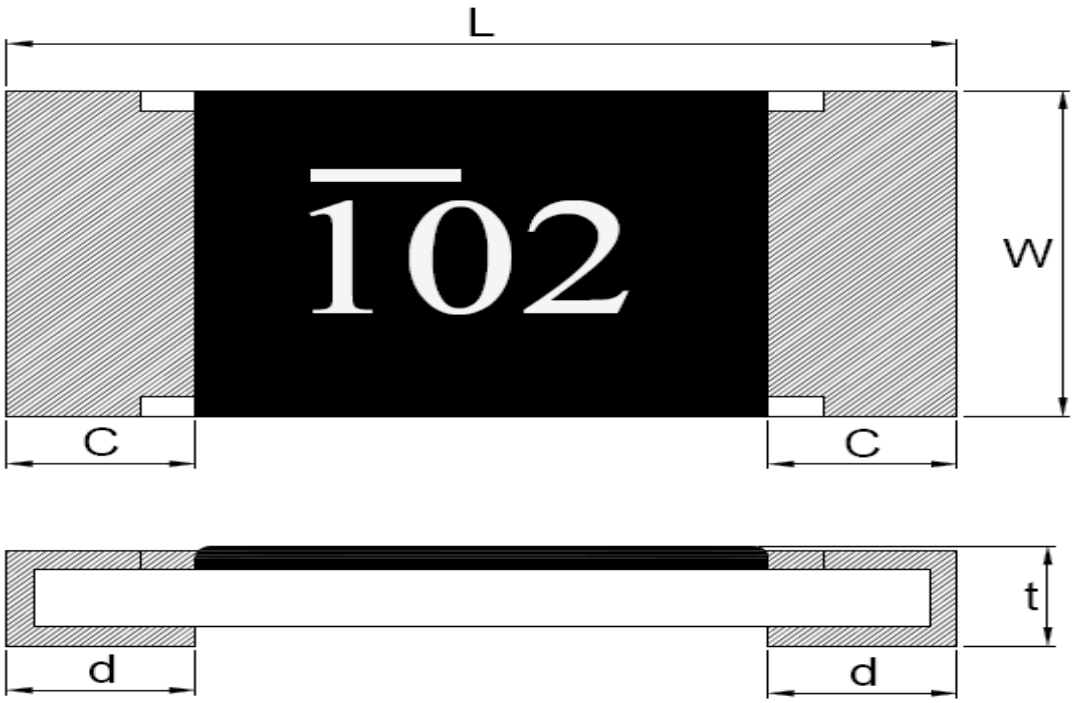

UNIT: mm

Type	L	W	C	d	t
RMS02	0.6 ±0.03	0.3 ±0.03	0.1 ±0.05	0.15 ±0.05	0.23 ±0.03
RMS04	$1.00^{+0.1}_{-0.05}$	0.50±0.05	0.20±0.10	0.25±0.10	0.32±0.05
RMS06	1.60±0.10	0.80±0.10	0.30±0.20	$0.30^{+0.2}_{-0.1}$	0.45±0.10
RMS10	2.00±0.10	1.25±0.10	0.40±0.20	0.40±0.20	0.50±0.10
RMS12	3.10±0.10	1.55±0.10	0.50±0.30	0.40±0.20	0.55±0.10
RMS13	3.10±0.10	2.55±0.10	0.50±0.30	0.40±0.20	0.60±0.10
RMS20	5.00±0.15	2.50±0.15	0.60±0.30	0.50±0.25	0.60±0.10
RMS25	6.30±0.20	3.20±0.20	0.60±0.30	0.50±0.25	0.60±0.10

5. Ratings & Characteristics :

Type	Power Rating at 70℃	Rating Voltage	Max. Working Voltage	Max. Over- Load Voltage	T.C.R (PPM/℃)	Resistance Range(Ω)			
						D(±0.5%) E-96&E-24	F(±1%) E-96&E-24	G(±2%) E-24	J(±5%) E-24
RMS02	1/20W	Refer 5.2	25V	50V	±200	100Ω-10KΩ	10Ω-3MΩ	10Ω-3MΩ	10Ω-10MΩ
					+600 -200		1-9.1Ω	1-9.1Ω	1-9.1Ω
RMS04	1/16W	Refer 5.2	50V	100V	±100	100Ω~1MΩ	100Ω~1MΩ		
					±200	10Ω≦R<100Ω	10Ω≦R<100Ω 1MΩ<R≦10MΩ	10Ω-10MΩ	10Ω-10MΩ
					+500 -200		1Ω-9.1Ω	1Ω-9.1Ω	1Ω-9.1Ω
					±400				10MΩ≦R≦20MΩ
RMS06	1/10W	Refer 5.2	50V	100V	±100	10Ω-1MΩ	10Ω-1MΩ		
					±200		1M<R≦10MΩ	10Ω-10MΩ	10Ω-10MΩ
					±400		1Ω-9.1Ω	1Ω-9.1Ω	1Ω-9.1Ω 10MΩ<R≦20MΩ
RMS10	1/8W	Refer 5.2	150V	300V	±100	10Ω-1MΩ	10Ω-1MΩ		
					±200		1M<R≦10MΩ	10Ω-10MΩ	10Ω-10MΩ
					±400		1Ω-9.1Ω	1Ω-9.1Ω	1Ω-9.1Ω 10MΩ<R≦20MΩ
RMS12	1/4W	Refer 5.2	200V	400V	±100	10Ω-1MΩ	10Ω-1MΩ		
					±200		1M<R≦10MΩ	10Ω-10MΩ	10Ω-10MΩ
					±400		1Ω-9.1Ω	1Ω-9.1Ω	1Ω-9.1Ω 10MΩ<R≦20MΩ
RMS13	1/3W	Refer 5.2	200V	400V	±100	10Ω-1MΩ	10Ω-1MΩ		
					±200		1M<R≦10MΩ	10Ω-10MΩ	10Ω-10MΩ
					±400		1Ω-9.1Ω	1Ω-9.1Ω	1Ω-9.1Ω 10MΩ<R≦20MΩ
RMS20	1/2W	Refer 5.2	200V	400V	±100	10Ω-1MΩ	10Ω-1MΩ		
					±200		1M<R≦10MΩ	10Ω-10MΩ	10Ω-10MΩ
					±400		1Ω-9.1Ω	1Ω-9.1Ω	1Ω-9.1Ω 10M<R≦20MΩ
RMS25	1W	Refer 5.2	200V	400V	±100	10Ω-1MΩ	10Ω-1MΩ		
					±200		1M<R≦10MΩ	10Ω-10MΩ	10Ω-10MΩ
					±400		1Ω-9.1Ω	1Ω-9.1Ω	1Ω-9.1Ω 10M<R≦20MΩ

OΩ THICK FILM CHIP RESISTORS			
Type	Rated Current	Max Overload Current	Resistance Range
RMS02	0.5A	1A	50mΩ MAX
RMS04	1A	2.5A	50mΩ MAX
RMS06	1A	2.5A	50mΩ MAX
RMS10	2A	5A	50mΩ MAX
RMS12	2A	5A	50mΩ MAX
RMS13	2A	5A	50mΩ MAX
RMS20	2A	5A	50mΩ MAX
RMS25	2A	5A	50mΩ MAX

Operating Temp(℃): -55℃ ～ +155℃ (RMS02 : -55℃ ～ +125℃)

Note : Except for the above standardized products, we also provide the customized products.

5.1 Derating Curve :

For resistors operated at ambient temperature over 70℃ , power rating shall be derated in accordance with figure 1.

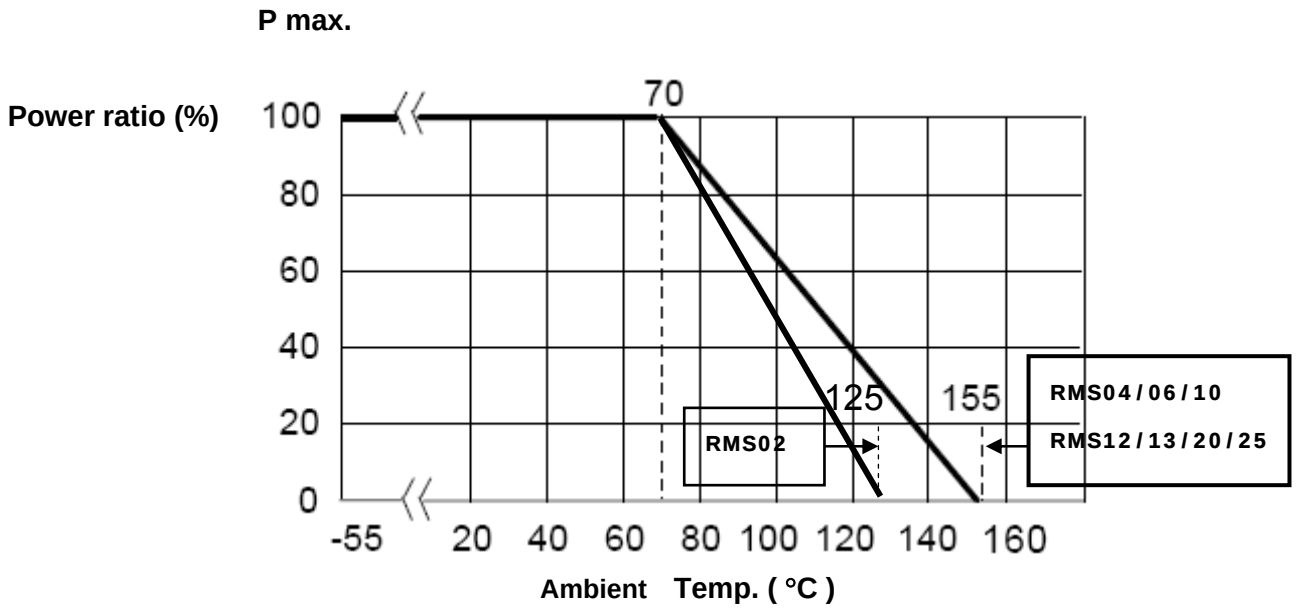

Figure 1

5.2 Rated Voltage:

The rated voltage is calculated by the following formula:

$$E = \sqrt{P * R}$$

E=Rated Voltage(V)
P=Rated Power(W)
R=Resistance Value(Ω)

E.G. : What is RMS06JT102 the rated voltage ?

RMS06JT102 P:1/10W ; R:102 = 1KΩ = 1000Ω

$$E = \sqrt{0.1(W) * 1000(\Omega)} = 10\ (V)$$

6. Reliability Tests:

Test Items	Reference standard	Condition of Test	Test Limits △R
Temperature Coefficient of Resistance	IEC 60115-1 4.8	-At +25/–55 °C and +25/+125 °C	Refer 5.0
Short Time Overload	IEC60115-1 4.13	2.5 X rated voltage for 5 sec	±(1% + 0.05Ω) Remarks : 0201: ±(3% + 0.1Ω) 0402 : ±(2% + 0.1Ω) 0Ω : 50mΩ or less
High Temperature Exposure (Storage)	AEC-Q200-REV C-Test 3 MIL-STD-202 Method 108	1000 hrs. @ T=125°C. Unpowered. Measurement at 24±2 hours after test conclusion.	0.5%,1%:±(1.0%+0.05Ω) 2%,5%:±(2.0%+0.1Ω) 0201 : ±(3% + 0.1Ω) 0Ω : 50mΩ or less
Moisture Resistance	AEC-Q200-REV C-Test 6 MIL-STD-202 Method 106	T=24 hours / Cycle ,10Cycles . Notes : Steps 7a& 7b not required. Unpowered .	0.5%,1%:±(1.0%+0.05Ω) 2%,5%:±(2.0%+0.1Ω) 0201 : ±(3% + 0.1Ω) 0Ω : 50mΩ or less
Biased Humidity	AEC-Q200-REV C-Test 7 MIL-STD-202 Method 103	1000 hours 85°C/85%RH. Note: Specified conditions: 10% of operating power(not exceeding max working voltage). Measurement at 24±2 hours after test conclusion.	±(3% + 0.1Ω) 0201 : ±(5% + 0.1Ω) 0Ω : 100mΩ or less
Operational Life	AEC-Q200-REV C-Test 8 MIL-STD-202 Method 108	1000 hours TA=70°C at rated power. Measurement at 24±2 hours after test conclusion.	0.5%,1%: ±(1% + 0.1Ω) 2%.5% : ±(3% + 0.1Ω) 0201 : ±(5% + 0.1Ω) 0Ω : 100mΩ or less
External Visual	AEC-Q200-REV C-Test 9 MIL-STD-883 Method 2009	Electrical test not required. Inspect device construction, marking and workmanship.	
Physical Dimension	AEC-Q200-REV C-Test 10 JESD22 Method JB-100	Verify physical dimensions to the applicable device detail specification. Note: User(s) and Suppliers spec. Electrical test not required.	
Resistance to Solvents	AEC-Q200-REV C-Test 12 MIL-STD-202 Method 215	a:Isopropyl Alcohol：Mineral Spirits= 1：3 b:Terpene Defluxer (Bioact EC-7R) c:Deionized water ：Propylene Glycol Monomethyl Ether：monoethanolamine = 42：1：1	Marking and protective layer can not be detached
Mechanical Shock	AEC-Q200-REV C-Test 13 MIL-STD-202 Method 213	Wave Form : Tolerance for half sine shock pluse. Peak value is 100g's. Normal duration(D) is 6(ms)	±(1% + 0.1Ω) 0Ω : 50mΩ or less
Vibration	AEC-Q200-REV C-Test 14 MIL-STD-202 Method 204	5 g's for 20 min., 12 cycles each of 3 orientations. Note: Test from 10-2000 Hz.	±(1% + 0.1Ω) 0Ω : 50mΩ or less
Resistance to Soldering Heat	AEC-Q200-REV C-Test 15 MIL-STD-202 Method 210	Condition B : Immerse the specimens in and eutectic solder at 260±5℃ for 10±1S .	0.5%,1% : ±(0.5% + 0.05Ω) 2%.5% : ±(1% + 0.1Ω) 0201 : ±(2% + 0.1Ω) 0Ω : 50mΩ or less
Thermal Shock	AEC-Q200-REV C-Test 16 MIL-STD-202 Method 107	-55°C/+155°C. Note: Number of cycles required-300, Maximum transfer time-20 seconds, Dwell time-15 minutes. Air-Air.	±(1% + 0.1Ω) 0201 : ±(2% + 0.1Ω) 0Ω : 50mΩ or less

ESD	AEC-Q200-REV C-Test 17	verify the voltage setting at 500V	±(1% + 0.1Ω) 0201 : ±(2% + 0.1Ω)
Solderability	AEC-Q200-REV C-Test 18 J-STD-002	Method B, aging 4 hours at 155 °C dry heat Lead-free solder bath at 245±3 °C Dipping time: 3±0.5 seconds	> 95% area covered with tin
Flammability	AEC-Q200-REV C-Test 17 UL-94	V-0 or V-1 are acceptable. Electrical test not required.	V-0 or V-1
Board Flex (Bending)	AEC-Q200-REV C-Test 21	3mm deflection(RMS02~RMS13) 2mm deflection(RMS20~RMS25)	0.5%,1% : ±(0.5% + 0.05Ω) 2%.5% : ±(1% + 0.1Ω) 0201 : ±(1% + 0.1Ω) 0Ω : 50mΩ or less
Terminal Strength (SMD)	IEC 60115-1 4.32	Force of 1.02kg for 10±1 seconds. Remarks : RMS04:0.51kg Remarks : 0201-NA	±(0.5% + 0.05Ω) 0Ω : 50mΩ or less
Sulfuration Test	ASTM-B-809-95	Sulfur(saturated vapor) 1,000 hours,105±2°C, unpowered	0.5%,1%:±(1%+0.05Ω) 2%, 5%:±(2%+0.05Ω) 0201: 0.5%,1%:±(2%+0.05Ω) 2%, 5%:±(3%+0.05Ω) 0Ω : 100mΩ or less

Note* : RCWV : Rated continuous working voltage .

7. Marking

7.1 ±2% & ±5%(E24) : RMS06 / RMS10 / RMS12 / RMS13 / RMS20 / RMS25

Resistance value is expressed by 3 digits, the first two digits represent the significant figures of nominal resistance value in Ω, and the third digit represents exponent for base of 10.

E.G. :, $\overline{1}02 = 10 \times 10^2 = 1000\Omega = 1K\Omega$

7.2 ±0.5% , ±1% (E96) : RMS10 / RMS12 / RMS13 / RMS20 / RMS25

Resistance value is expressed by 4 digits , the first three digits represent the significant figures of nominal resistance value in Ω, and the fourth digit represents exponent for base of 10.

E.G. : $\overline{1}000 = 100 \times 10^0 = 100\Omega$

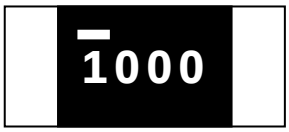

7.3 ±0.5% , ±1% (E96): RMS06

When the marking space is too small in such small-sized resistors as RMS06, the marking can not made by 4 digits and may be made by two digits combined with one English capital.

Symbol for E96 series nominal resistance value

Symbol	E96	Symbol	E96	Symbol	E96	Symbol	E96
01	100	25	178	49	316	73	562
02	102	26	182	50	324	74	576
03	105	27	187	51	332	75	590
04	107	28	191	52	340	76	604
05	110	29	196	53	348	77	619
06	113	30	200	54	357	78	634
07	115	31	205	55	365	79	649
08	118	32	210	56	374	80	665
09	121	33	215	57	383	81	681
10	124	34	221	58	392	82	698
11	127	35	226	59	402	83	715
12	130	36	232	60	412	84	732
13	133	37	237	61	422	85	750
14	137	38	243	62	432	86	768
15	140	39	249	63	442	87	787
16	143	40	255	64	453	88	806
17	147	41	261	65	464	89	825
18	150	42	267	66	475	90	845
19	154	43	274	67	487	91	866
20	158	44	280	68	499	92	887
21	162	45	287	69	511	93	909
22	165	46	294	70	523	94	931
23	169	47	301	71	536	95	953
24	174	48	309	72	549	96	976

Symbol for multipliers

Symbol	A	B	C	D	E	F	G	H	X	Y	Z
multipliers	10^0	10^1	10^2	10^3	10^4	10^5	10^6	10^7	10^{-1}	10^{-2}	10^{-3}

E.G : $\overline{0}$1A = 100×10^0 = 100Ω

Notes :

When the resistance value is not in the list of E96 , 3 digitals with underline in E-24 series is used as mark .

E.G. : 0603 , 120Ω , 1% Marking is $\overline{1}$21

7.4 ±0.5% ,±1%(E96/3digitals) :

The resistance value by 3 digits is requirement for customer.

7.5 RMS04 :

7.6 RMS02 :

NO Marking

8. Taping & Reel :

8.1 Taping Dimensions

8.1.1 4 mm pitch paper:

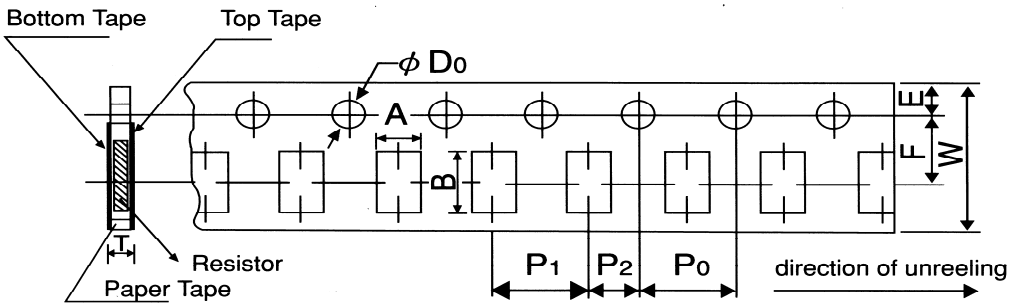

Packing	Type	A	B	W	F	E	P_1	P_2	P_0	D_0	T
Paper	RMS06	1.1±0.1	1.9±0.1	8.0±0.2	3.5±0.05	1.75±0.1	4.0±0.1	2.0±0.05	4.0±0.1	ϕ 1.5 $^{+0.1}_{-0}$	0.64±0.1
	RMS10	1.6±0.15	2.4±0.2								0.84±0.1
	RMS12	2.0±0.15	3.6±0.2								
	RMS13	2.8±0.2	3.6±0.2								

8.1.2 2 mm pitch paper :

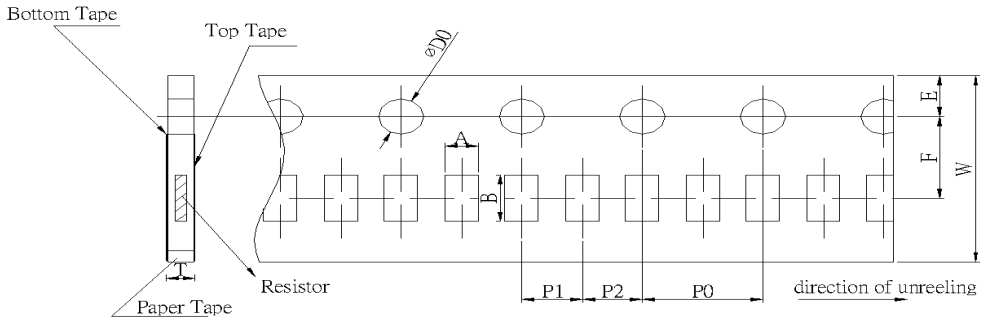

Packing	Type	A	B	W	F	E	P_1	P_2	P_0	D_0	T
Paper	RMS02	0.37±0.05	0.67±0.1	8.0±0.2	3.5±0.05	1.75±0.1	2.0±0.1	2.0±0.05	4.0±0.1	ϕ 1.5 +0.1 -0	0.37±0.1
	RMS04	0.7±0.05	1.2±0.05				2.0±0.1	2.0±0.1			0.45±0.1
	RMS06	1.1±0.1	1.9±0.1				2.0±0.1	2.0±0.1			0.64±0.1

8.1.3 4 mm pitch Emboss :

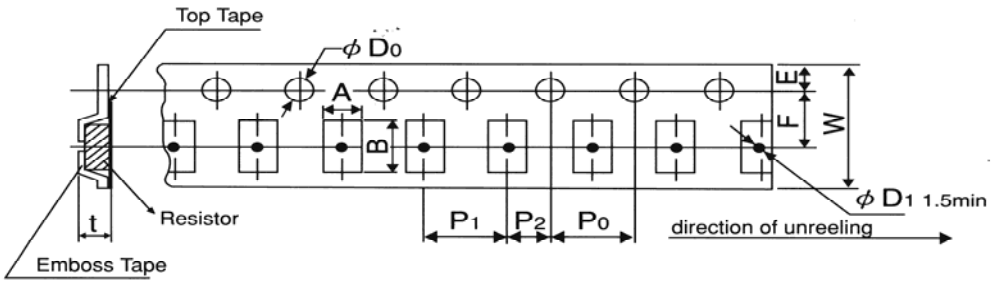

Packing	Type	A	B	W	F	E	P_1	P_2	P_0	D_0	T
Emboss	RMS20	2.8±0.2	5.3±0.2	12.0±0.2	5.5±0.05	1.75±0.1	4.0±0.1	2.0±0.05	4.0±0.05	ϕ 1.5 +0.1 -0	0.85±0.15
	RMS25	3.6±0.2	6.9±0.2								

Type \ Size \ Package		Paper Tape				Emboss Plastic Tape 4 mm pitch
		4 mm pitch		2 mm pitch		
		178mm/R	250mm/R	178mm/R	250mm/R	
RMS	02			10000		
RMS	04			10000	20000	
RMS	06	5000	10000	10000	20000	
RMS	10	5000	10000			
RMS	12	5000	10000			
RMS	13	5000				
RMS	20					4000
RMS	25					4000

8.2 Reel Specifications:

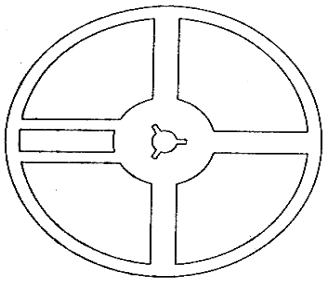

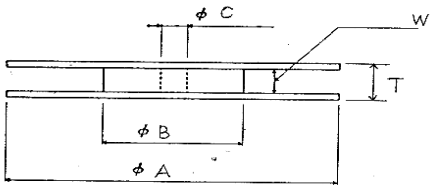

UNIT: mm

Type	ϕA	ϕB	ϕC	W	T
RMS02 /04 / 06 RMS10 /12 /13	178.0 ± 2.0	60.0 ± 1.0	13.0 ± 1.0	9.0 ± 1.0	11.5 ± 1.0
RMS20 / 25				13.0 ± 1.0	15.5 ± 1.0

8.3. Peel –off force :

Peel –off force of paper and blister tape is in accordance with “JIS-C5202 ”

that is , 0.1 to 0.7 N at a peel-off speed of 300 mm / minute.

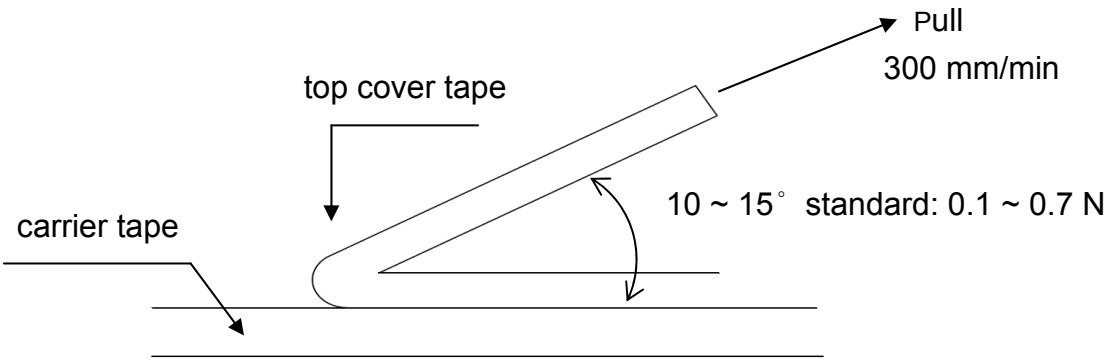

9. Label :

9.1 Manufacture Label :

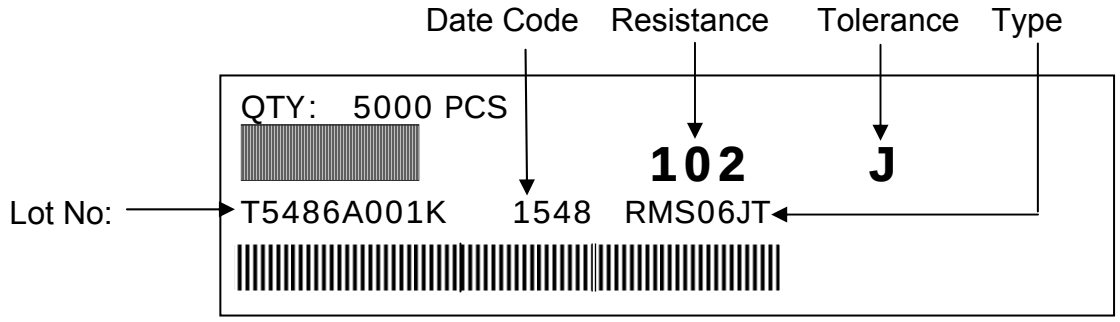

9.2 Customer Label (By customer request):

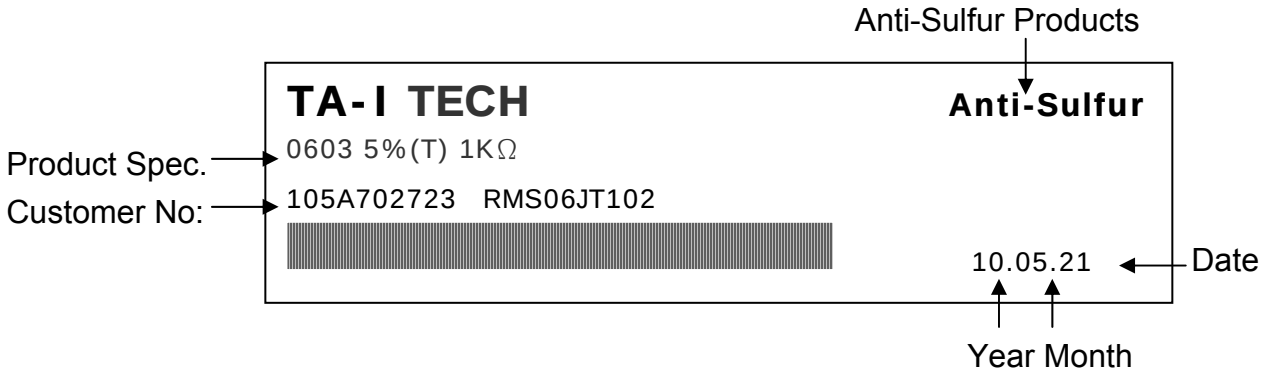

10. Recommended land patterns :

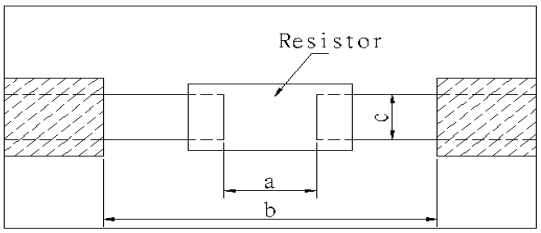

Type \ Size \ Land pattern		Dimension (mm)		
		a	b	c
RMS	02 (0201)	0.25~0.3	0.7~0.9	0.3~0.4
RMS	04 (0402)	0.50~0.6	1.4~1.6	0.4~0.6
RMS	06 (0603)	0.7~0.9	2.0~2.2	0.8~1.0
RMS	10 (0805)	1.0~1.4	3.2~3.8	0.9~1.4
RMS	12 (1206)	2.0~2.4	4.4~5.0	1.2~1.8
RMS	13 (1210)	2.0~2.4	4.4~5.0	2.3~3.5
RMS	20 (2010)	3.3~3.7	5.7~6.5	2.3~3.5
RMS	25 (2512)	3.6~4.0	7.6~8.6	2.3~3.5

11. Recommend IR – Reflow profile : (solder : Sn96.5 / Ag3 / Cu0.5)

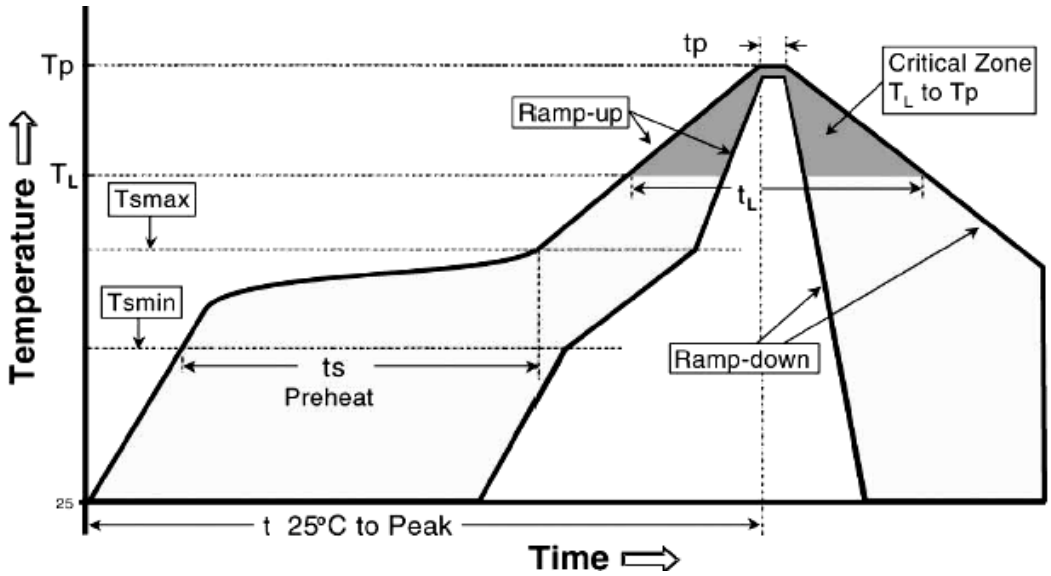

Profile Feature	Lead (Pb)-Free Assembly
Average ramp-up rate (Tsmax to Tp)	3℃ / second max.
Preheat - Temperature Min (Ts_{min}) - Temperature Max (Ts_{max}) - Time (Ts_{min} to Ts_{max}) (ts)	 150℃ 200℃ 60 -150 seconds
Time maintained above : - Temperature (T_L) - Time (T_L)	 217℃ 60-120 seconds
Peak Temperature (Tp)	260℃
Time within $^{+0}_{-5}$℃ of actual Peak Temperature (tp)[2]	10 seconds
Ramp-down Rate	6℃/second max.
Time 25℃ to Peak Temperature	8mimutes max.

Remark : To avoid discoloration phenomena of chip on terminal electrodes, please use N2 Re-flow furnace .

12. Storage Conditions:

Temperature: 5℃~35℃,Humidity:40%~75%

13. Shelf Life:

2 years from manufacturing date.

14. ECN :

Engineering Change Notice: The customer will be informed with ECN if there is significant modification on the characteristics and materials described in Approval Sheet.

15. Manufacturing Country & City :

TA-I TECHNOLOGY CO., LTD. (Taiwan– Tao Yuan)
Tel: 886-3-3246169 Fax : 886-3-3246167

TA-I TECHNOLOGY (SU ZHOU) CO., LTD. (China – Su Zhou)
Tel :86- 512-63457879 Fax : 86-512-63457869

Associated companies :

(1) FORTUNE TASK RESISTOR FACTORY (China – Dongguan)
Tel : 86-769-8339-4790～3 Fax : 86-769-8339-4794

(2) TA-I TECHNOLOGY ELECTRONIC (DONG GUAN) CO.,LTD (China –Dongguan)
Tel : 86-769-8339-4790～3 Fax : 86-769-8339-4794

(3) TAI OHM ELECTRONICS (M) SDN. BHD. (Malaysia –Penang)
Tel :604- 3900480 Fax : 604-3901481

(4) P.T.TAI ELECTRONICS Indonesia (Indonesia – Jakarta)
Tel :62-21-89830123 Fax : 62-21-89830703

X-ON Electronics

Largest Supplier of Electrical and Electronic Components

Click to view similar products for Thick Film Resistors - SMD ***category:***

Click to view products by TA-I Tech ***manufacturer:***

Other Similar products are found below :

CR-05FL7--150R CR-05FL7--19K6 CR-05FL7--243R CR-05FL7--40K2 CR-05FL7--698K CR-12FP4--324R CR-12JP4--680R M55342K06B1E78RS3 M55342K06B6E19RWL M55342K06B6E81RS3 M55342M05B200DRWB M55342M06B4K70MS3 MC0603-511-JTW 742C083750JTR MCR01MZPF1202 MCR01MZPF1601 MCR01MZPF1800 MCR01MZPF6201 MCR01MZPF9102 MCR01MZPJ113 MCR01MZPJ121 MCR01MZPJ125 MCR01MZPJ751 MCR03EZHJ103 MCR03EZPFX2004 MCR03EZPJ270 MCR03EZPJ821 MCR10EZPF1102 MCR18EZPJ330 RC0603F1473CS RC0603F150CS RC1005F1152CS RC1005F1182CS RC1005F1372CS RC1005F183CS RC1005F1911CS RC1005F1912CS RC1005F203CS RC1005F2052CS RC1005F241CS RC1005F2431CS RC1005F3011CS RC1005F303CS RC1005F4321CS RC1005F4642CS RC1005F471CS RC1005F4751CS RC1005F5621CS RC1005F6041CS RC1005J106CS