TECH PUBLIC
台舟电子

DMC2400UV

20V N-Channel + P-Channel Enhancement Mode MOSFET

www.sot23.com.tw

Features

$V_{(BR)DSS}$	$R_{DS(on)}$MAX	I_D
20V	380mΩ@4.5V	0.75A
	450mΩ@2.5V	
	800mΩ@1.8V	
-20V	520mΩ@-4.5V	-0.66A
	700mΩ@-2.5V	
	950mΩ(TYP)@-1.8V	

- ESD Protected

Application

- *Notebook*
- *Load Switch*
- *Networking*
- *Hand-held Instruments*

Package and Pin Configuration

SOT563

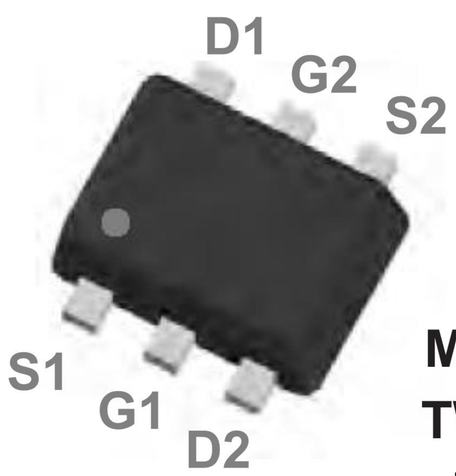

Marking: TW.P
TW =Par Nunber
P =TECH PUBIC LOGOO

Circuit diagram

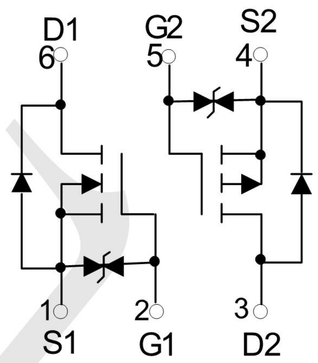

Absolute Maximum Ratings Tc=25℃ unless otherwise noted

Parameter	Symbol	Value	Unit
N-MOSFET			
Drain-Source Voltage	V_{DS}	20	V
Typical Gate-Source Voltage	V_{GS}	±8	V
Continuous Drain Current (note 1)	I_D	0.75	A
Pulsed Drain Current (tp=10us)	I_{DM}	1.8	A
P-MOSFET			
Drain-Source Voltage	V_{DS}	-20	V
Typical Gate-Source Voltage	V_{GS}	±12	V
Continuous Drain Current (note 1)	I_D	-0.7	A
Pulsed Drain Current (tp=10us)	I_{DM}	-1.2	A
Temperature and Thermal Resistance			
Thermal Resistance from Junction to Ambient (note 1)	$R_{\theta JA}$	833	℃/W
Junction Temperature	T_J	150	℃
Storage Temperature	T_{STG}	-55~+150	℃
Lead Temperature for Soldering Purposes(1/8'' from case for 10 s)	T_L	260	℃

Electrical Characteristics (T_J=25 ℃, unless otherwise noted)

N-ch MOSFET ELECTRICAL CHARACTERISTICS

Parameter	Symbol	Test Condition	Min	Typ	Max	Unit
STATIC CHARACTERISTICS						
Drain-source breakdown voltage	$V_{(BR)DSS}$	V_{GS} = 0V, I_D =250μA	20			V
Zero gate voltage drain current	I_{DSS}	V_{DS} =20V,V_{GS} = 0V			1	μA
Gate-body leakage current	I_{GSS}	V_{GS} =±10V, V_{DS} = 0V			±20	uA
Gate threshold voltage (note 2)	$V_{GS(th)}$	V_{DS} =V_{GS}, I_D =250μA	0.45		1.1	V
Drain-source on-resistance(note 2)	$R_{DS(on)}$	V_{GS} =4.5V, I_D =0.65A			380	mΩ
		V_{GS} =2.5V, I_D =0.55A			450	mΩ
		V_{GS} =1.8V, I_D =0.45A			800	mΩ
Forward tranconductance(note 2)	g_{FS}	V_{DS} =10V, I_D =0.8A		1.6		S
Diode forward voltage	V_{SD}	I_S=0.15A, V_{GS} = 0V			1.2	V
DYNAMIC CHARACTERISTICS (note 4)						
Input Capacitance	C_{iss}	V_{DS} =16V,V_{GS} =0V,f =1MHz			120	pF
Output Capacitance	C_{oss}				20	pF
Reverse Transfer Capacitance	C_{rss}				15	pF
SWITCHING CHARACTERISTICS (note 3,4)						
Turn-on delay time	$t_{d(on)}$	V_{GS}=4.5V,V_{DS}=10V, I_D=500mA,R_{GEN}=10Ω		6.7		ns
Turn-on rise time	t_r			4.8		ns
Turn-off delay time	$t_{d(off)}$			17.3		ns
Turn-off fall time	t_f			7.4		ns

P-ch MOSFET ELECTRICAL CHARACTERISTICS

Parameter	Symbol	Test Condition	Min	Typ	Max	Unit
STATIC CHARACTERISTICS						
Drain-source breakdown voltage	$V_{(BR)DSS}$	V_{GS} = 0V, I_D =-250μA	-20			V
Zero gate voltage drain current	I_{DSS}	V_{DS} =-20V,V_{GS} = 0V			-1	μA
Gate-body leakage current	I_{GSS}	V_{GS} =±10V, V_{DS} = 0V			±20	uA
Gate threshold voltage (note 2)	$V_{GS(th)}$	V_{DS} =V_{GS}, I_D =-250μA	-0.45		-1.1	V
Drain-source on-resistance(note 2)	$R_{DS(on)}$	V_{GS} =-4.5V, I_D =-1A		270	520	mΩ
		V_{GS} =-2.5V, I_D =-0.8A		320	700	mΩ
		V_{GS} =-1.8V, I_D =-0.5A		950		mΩ
Forward tranconductance(note 2)	g_{FS}	V_{DS} =-10V, I_D =-0.54A		1.2		S
Diode forward voltage	V_{SD}	I_S=-0.5A, V_{GS} = 0V			-1.2	V
DYNAMIC CHARACTERISTICS (note 4)						
Input Capacitance	C_{iss}	V_{DS} =-16V,V_{GS} =0V,f =1MHz			170	pF
Output Capacitance	C_{oss}				25	pF
Reverse Transfer Capacitance	C_{rss}				15	pF
SWITCHING CHARACTERISTICS (note 3,4)						
Turn-on delay time	$t_{d(on)}$	V_{GS}=-4.5V,V_{DS}=-10V, I_D=-200mA,R_{GEN}=10Ω		9		ns
Turn-on rise time	t_r			5.8		ns
Turn-off delay time	$t_{d(off)}$			32.7		ns
Turn-off fall time	t_f			20.3		ns

SOT-563 Package Outline Drawing

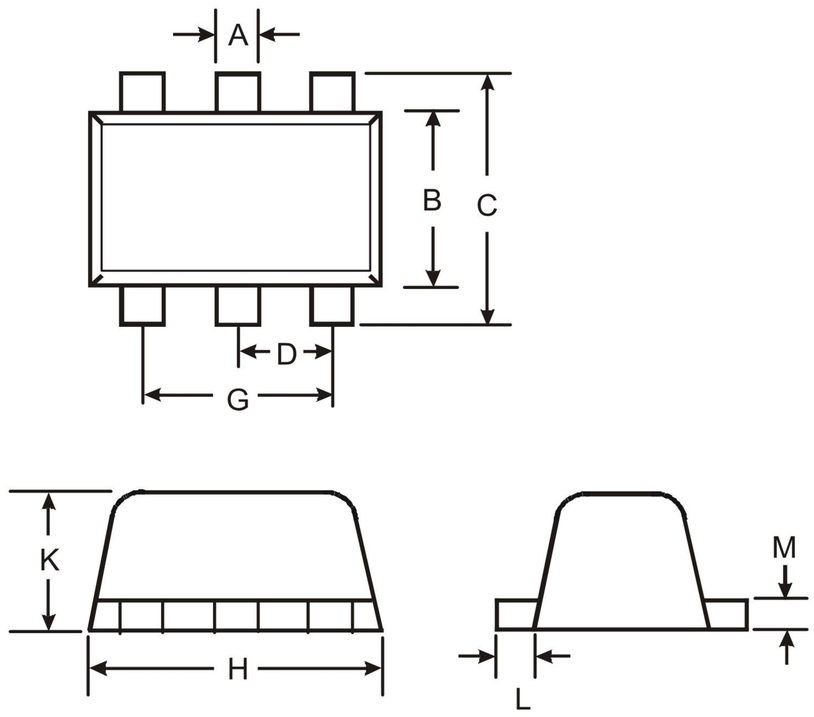

SOT563			
Dim	Min	Max	Typ
A	0.15	0.30	0.20
B	1.10	1.25	1.20
C	1.55	1.70	1.60
D	-	-	0.50
G	0.90	1.10	1.00
H	1.50	1.70	1.60
K	0.55	0.60	0.60
L	0.10	0.30	0.20
M	0.10	0.18	0.11
All Dimensions in mm			

Suggested Pad Layout

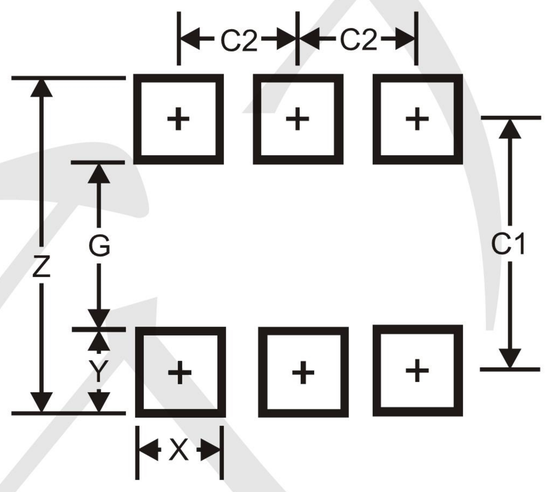

Dimensions	Value (in mm)
Z	2.2
G	1.2
X	0.375
Y	0.5
C1	1.7
C2	0.5

X-ON Electronics

Largest Supplier of Electrical and Electronic Components

Click to view similar products for MOSFET ***category:***

Click to view products by TECH PUBLIC ***manufacturer:***

Other Similar products are found below :

614233C 648584F IRFD120 IRFF430 JANTX2N5237 2N7000 FCA20N60_F109 FDZ595PZ AOD464 2SK2267(Q) 2SK2545(Q,T) 405094E 423220D MIC4420CM-TR VN1206L 614234A 715780A SSM6J414TU,LF(T 751625C BSC884N03MS G BSF024N03LT3 G PSMN4R2-30MLD TK31J60W5,S1VQ(O 2SK2614(TE16L1,Q) DMN1017UCP3-7 EFC2J004NUZTDG FCAB21350L1 P85W28HP2F-7071 DMN1053UCP4-7 NTE2384 NTE2969 NTE6400A DMN2080UCB4-7 DMN61D9UWQ-13 US6M2GTR DMN31D5UDJ-7 SSM6P54TU,LF DMP22D4UFO-7B IPS60R3K4CEAKMA1 DMN1006UCA6-7 DMN16M9UCA6-7 STF5N65M6 STU5N65M6 C3M0021120D DMN13M9UCA6-7 BSS340NWH6327XTSA1 MCM3400A-TP DMTH10H4M6SPS-13 IRF40SC240ARMA1 IPS60R1K0PFD7SAKMA1