TPNTZD3154NT1G

20V Dual N-Channel Enhancement Mode MOSFET

www.sot23.com.tw

Features

- *Fast switching*
- *Green Device Available*
- *Suit for 1.5V Gate Drive Applications*

Application

- *Notebook*
- *Load Switch*
- *Networking*
- *Hand-held Instruments*

Package and Pin Configuration

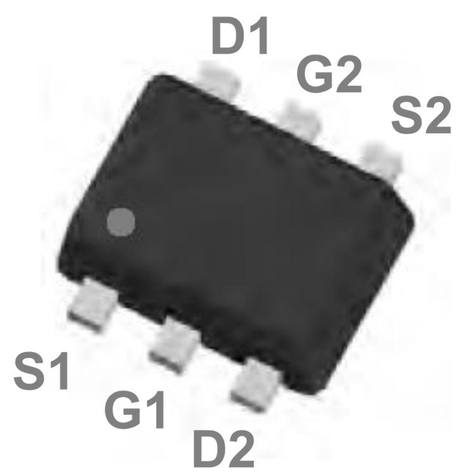

Marking: TV P

TV = Part Nunber
P = TECH PUBLIC Logo

Circuit diagram

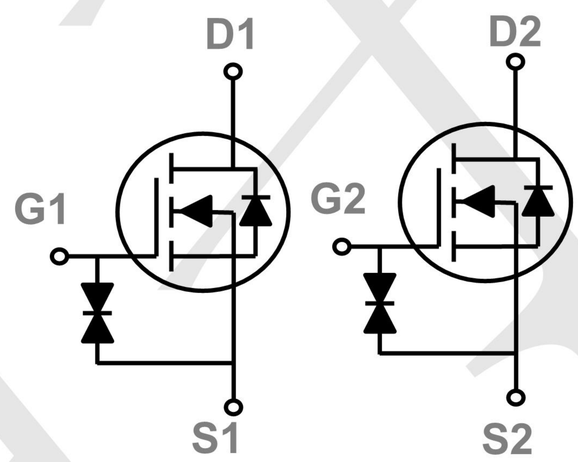

Absolute Maximum Ratings Tc=25℃ unless otherwise noted

Symbol	Parameter	Rating	Units
V_{DS}	Drain-Source Voltage	20	V
V_{GS}	Gate-Source Voltage	±8	V
I_D	Drain Current – Continuous (T_A=25℃)	800	mA
	Drain Current – Continuous (T_A=70℃)	640	mA
I_{DM}	Drain Current – Pulsed[1]	3.2	A
P_D	Power Dissipation (T_A=25℃)	312	mW
	Power Dissipation – Derate above 25℃	2.5	mW/℃
T_{STG}	Storage Temperature Range	-55 to 150	℃
T_J	Operating Junction Temperature Range	-55 to 150	℃

Thermal Characteristics

Symbol	Parameter	Typ.	Max.	Unit
$R_{\theta JA}$	Thermal Resistance Junction to ambient	---	400	℃/W

Electrical Characteristics (T_J=25 ℃, unless otherwise noted)

Off Characteristics

Symbol	Parameter	Conditions	Min.	Typ.	Max.	Unit
BV_{DSS}	Drain-Source Breakdown Voltage	V_{GS}=0V , I_D=250uA	20	---	---	V
$\triangle BV_{DSS}/\triangle T_J$	BV_{DSS} Temperature Coefficient	Reference to 25℃ , I_D=1mA	---	-0.01	---	V/℃
I_{DSS}	Drain-Source Leakage Current	V_{DS}=20V , V_{GS}=0V , T_J=25℃	---	---	1	uA
		V_{DS}=16V , V_{GS}=0V , T_J=125℃	---	---	10	uA
I_{GSS}	Gate-Source Leakage Current	V_{GS}=±8V , V_{DS}=0V	---	---	±10	uA

On Characteristics

$R_{DS(ON)}$	Static Drain-Source On-Resistance	V_{GS}=4.5V , I_D=0.5A	---	200	300	mΩ
		V_{GS}=2.5V , I_D=0.4A	---	235	400	
		V_{GS}=1.8V , I_D=0.2A	---	295	550	
		V_{GS}=1.5V , ID=0.1A	---	365	800	
		V_{GS}=1.2V , ID=0.1A	---	600	1500	
$V_{GS(th)}$	Gate Threshold Voltage	V_{GS}=V_{DS} , I_D =250uA	0.3	0.6	1.0	V
$\triangle V_{GS(th)}$	$V_{GS(th)}$ Temperature Coefficient		---	3	---	mV/℃

Dynamic and switching Characteristics

Q_g	Total Gate Charge[2,3]	V_{DS}=10V , V_{GS}=4.5V , I_D=0.5A	---	1	2	nC
Q_{gs}	Gate-Source Charge[2,3]		---	0.26	0.5	
Q_{gd}	Gate-Drain Charge[2,3]		---	0.2	0.4	
$T_{d(on)}$	Turn-On Delay Time[2,3]	V_{DD}=10V , V_{GS}=4.5V , R_G=10Ω I_D=0.5A	---	5	10	ns
T_r	Rise Time[2,3]		---	3.5	7	
$T_{d(off)}$	Turn-Off Delay Time[2,3]		---	14	28	
T_f	Fall Time[2,3]		---	6	12	
C_{iss}	Input Capacitance	V_{DS}=10V , V_{GS}=0V , F=1MHz	---	38.2	75	pF
C_{oss}	Output Capacitance		---	14.4	28	
C_{rss}	Reverse Transfer Capacitance		---	6	12	

Drain-Source Diode Characteristics and Maximum Ratings

Symbol	Parameter	Conditions	Min.	Typ.	Max.	Unit
I_S	Continuous Source Current	V_G=V_D=0V , Force Current	---	---	0.8	A
I_{SM}	Pulsed Source Current		---	---	1.6	A
V_{SD}	Diode Forward Voltage	V_{GS}=0V , I_S=0.3A , T_J=25℃	---	---	1.2	V

Characteristic Curves

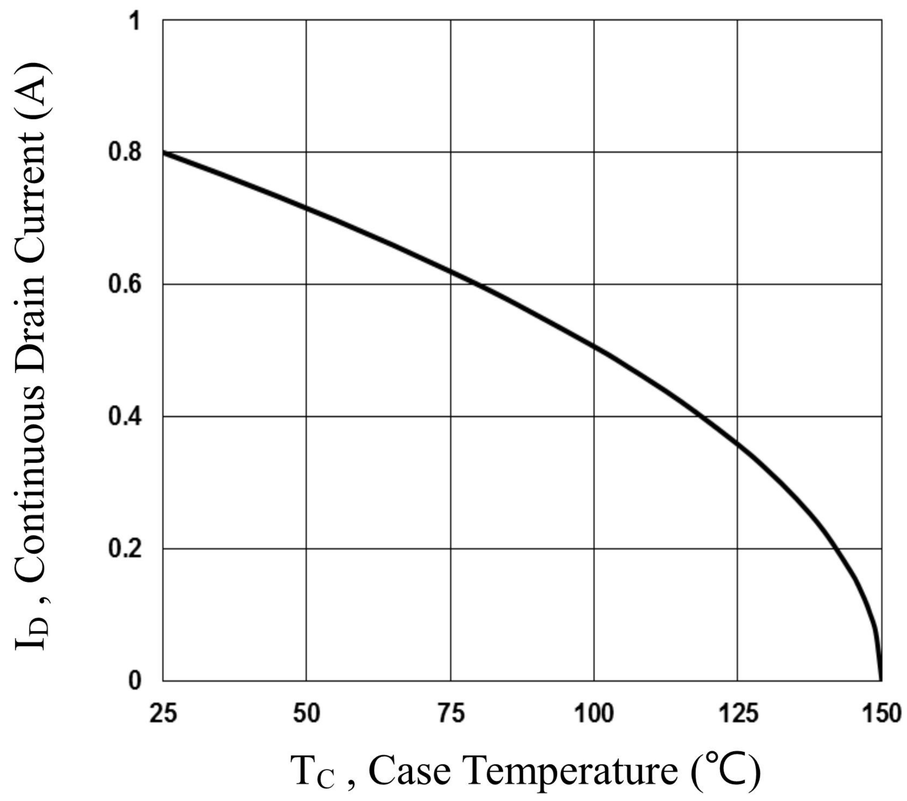

Fig.1 Continuous Drain Current vs. T_C

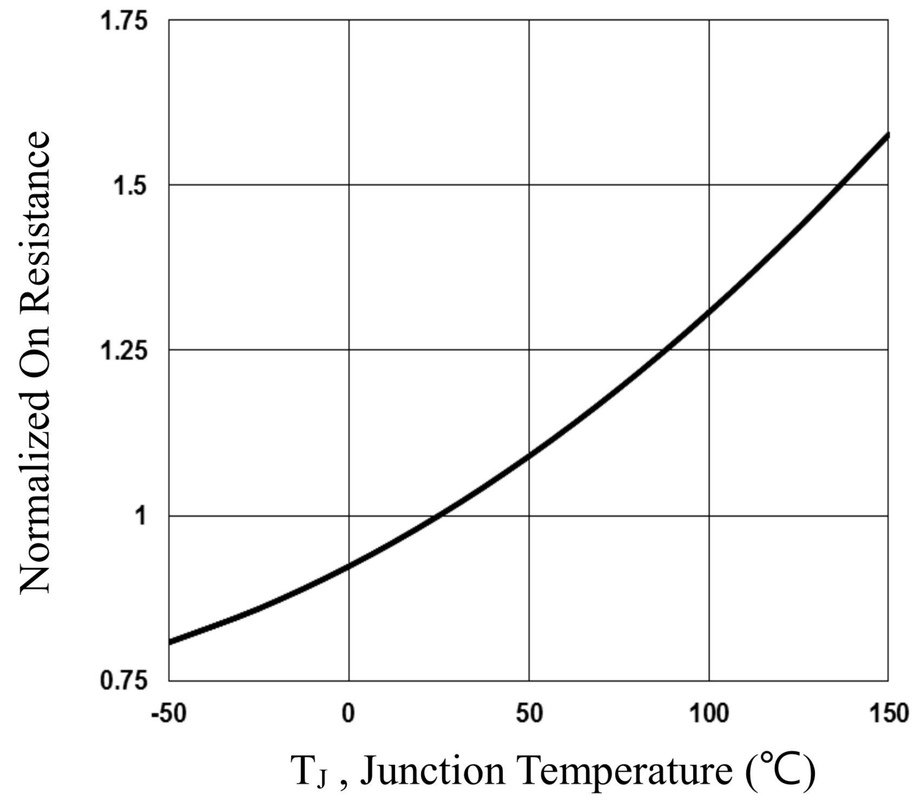

Fig.2 Normalized RDSON vs. T_J

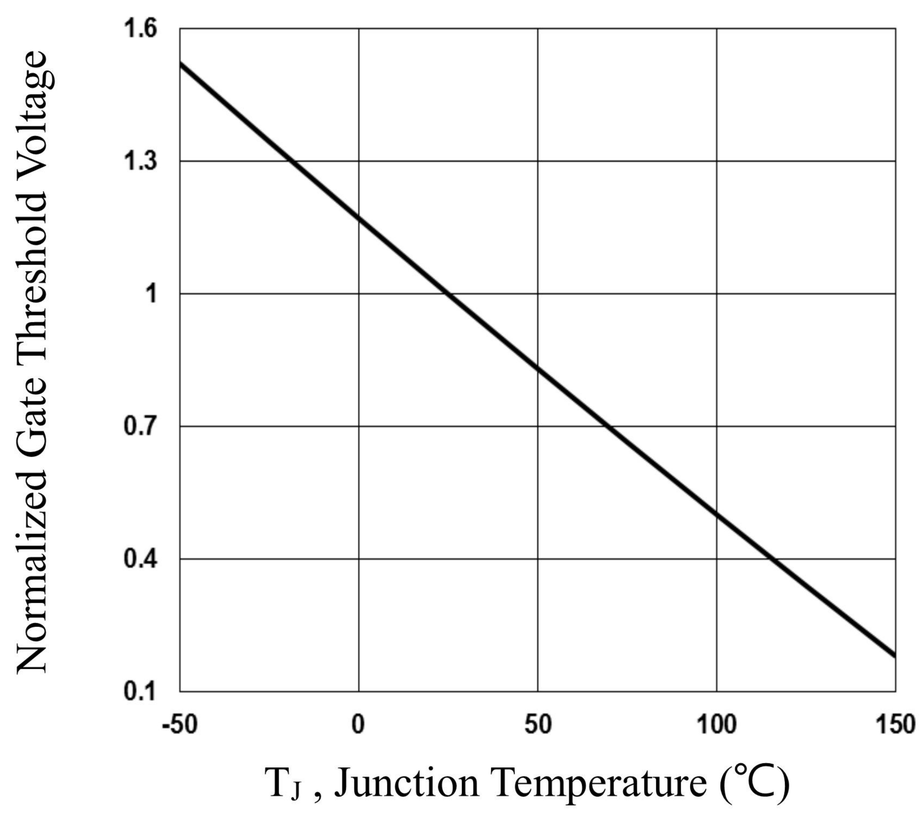

Fig.3 Normalized V_{th} vs. T_J

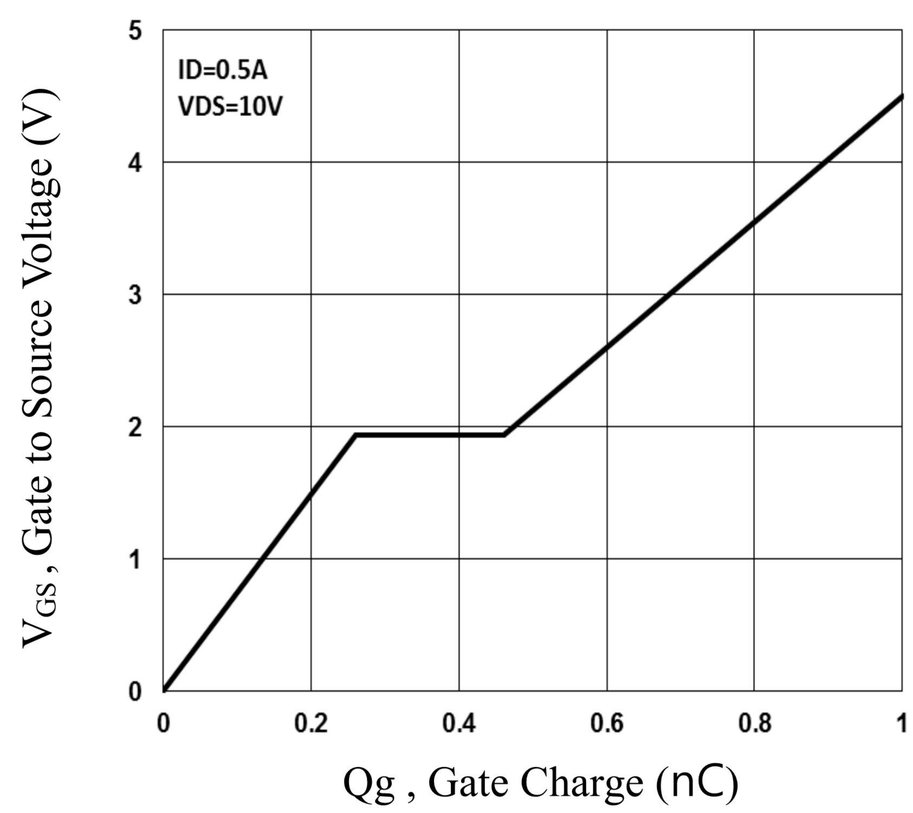

Fig.4 Gate Charge Waveform

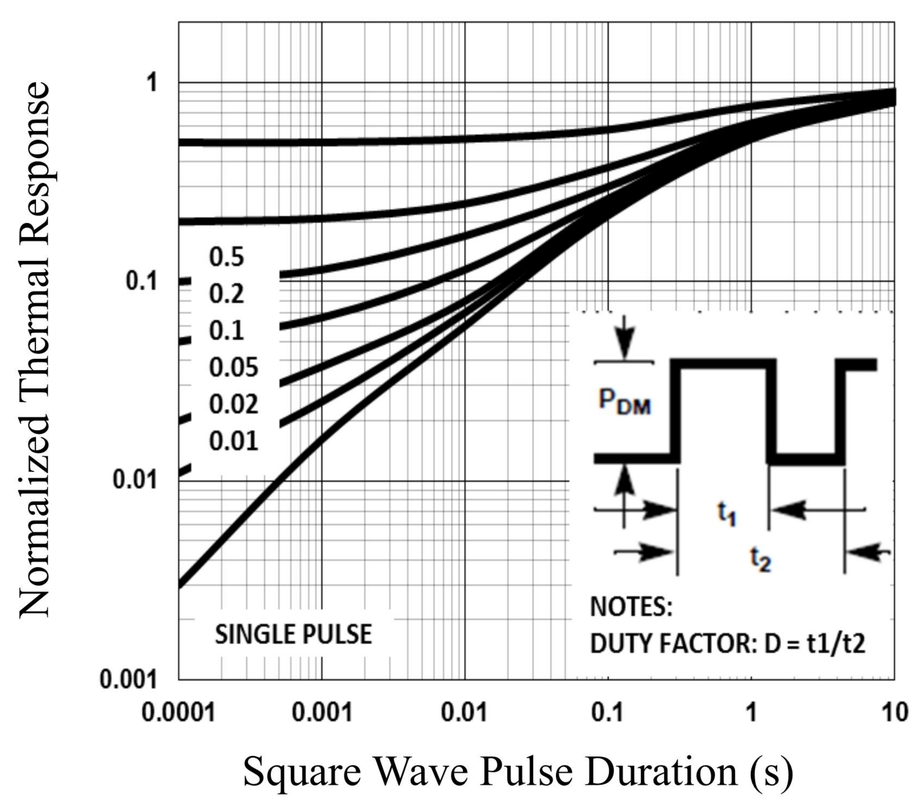

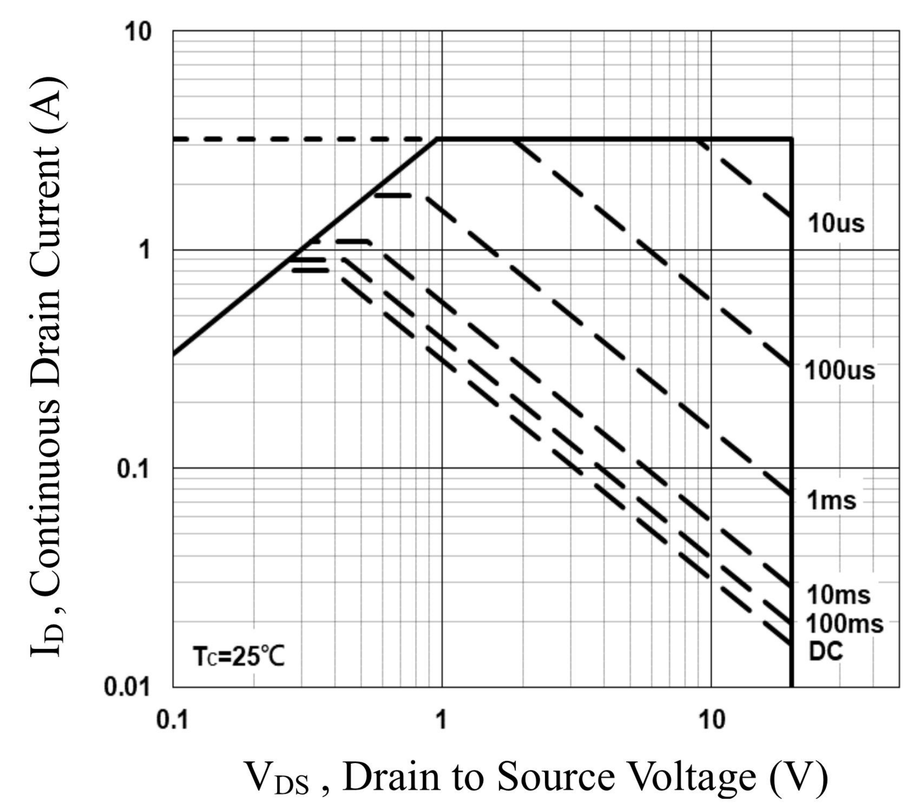

SOT-563 Package Outline Drawing

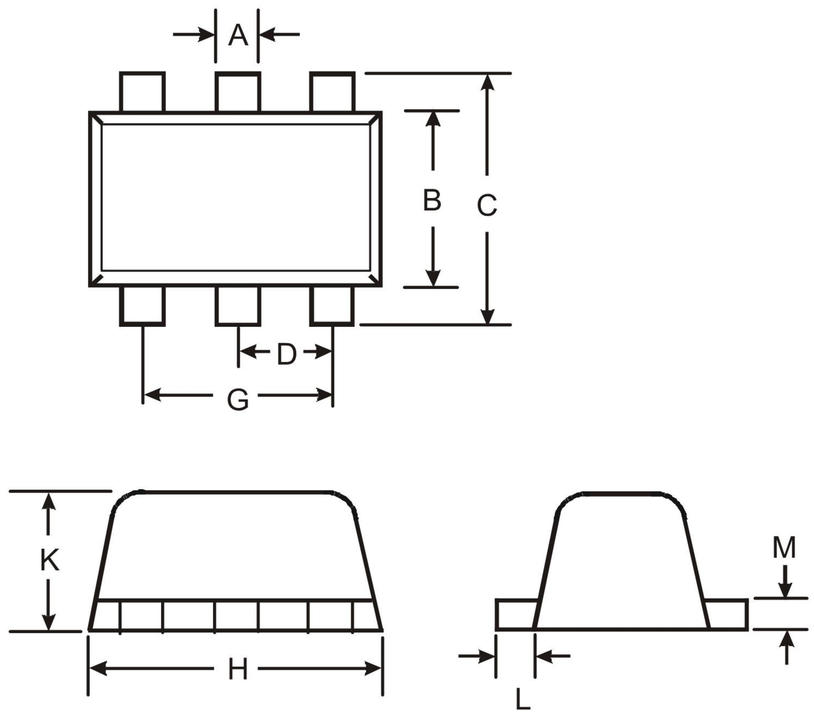

SOT563			
Dim	Min	Max	Typ
A	0.15	0.30	0.20
B	1.10	1.25	1.20
C	1.55	1.70	1.60
D	-	-	0.50
G	0.90	1.10	1.00
H	1.50	1.70	1.60
K	0.55	0.60	0.60
L	0.10	0.30	0.20
M	0.10	0.18	0.11
All Dimensions in mm			

Suggested Pad Layout

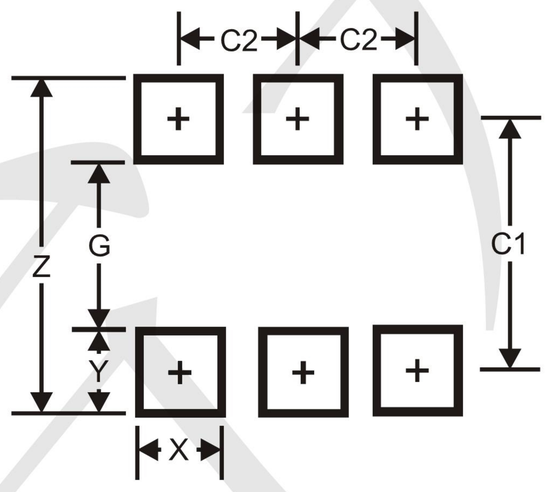

Dimensions	Value (in mm)
Z	2.2
G	1.2
X	0.375
Y	0.5
C1	1.7
C2	0.5

X-ON Electronics

Largest Supplier of Electrical and Electronic Components

Click to view similar products for MOSFET ***category:***

Click to view products by TECH PUBLIC ***manufacturer:***

Other Similar products are found below :

614233C 648584F IRFD120 IRFF430 JANTX2N5237 2N7000 FCA20N60_F109 FDZ595PZ AOD464 2SK2267(Q) 2SK2545(Q,T) 405094E 423220D MIC4420CM-TR VN1206L 614234A 715780A SSM6J414TU,LF(T 751625C PSMN4R2-30MLD TK31J60W5,S1VQ(O 2SK2614(TE16L1,Q) DMN1017UCP3-7 EFC2J004NUZTDG FCAB21350L1 P85W28HP2F-7071 DMN1053UCP4-7 NTE2384 NTE2969 NTE6400A DMN2080UCB4-7 DMN61D9UWQ-13 US6M2GTR DMN31D5UDJ-7 SSM6P54TU,LF DMP22D4UFO-7B IPS60R3K4CEAKMA1 DMN1006UCA6-7 DMN16M9UCA6-7 STF5N65M6 STU5N65M6 C3M0021120D DMN13M9UCA6-7 BSS340NWH6327XTSA1 MCM3400A-TP DMTH10H4M6SPS-13 IRF40SC240ARMA1 IPS60R1K0PFD7SAKMA1 IPS60R360PFD7SAKMA1 IPS60R600PFD7SAKMA1