DRAWING MADE IN THIRD ANGLE PROJECTION

© COPYRIGHT

LOC AD | DIST 39

REVISIONS						
P	F	ZONE	LTR	DESCRIPTION	DATE	APPROVED
			K1	REVISED PER ECO-11-005294	06APR11	HMR

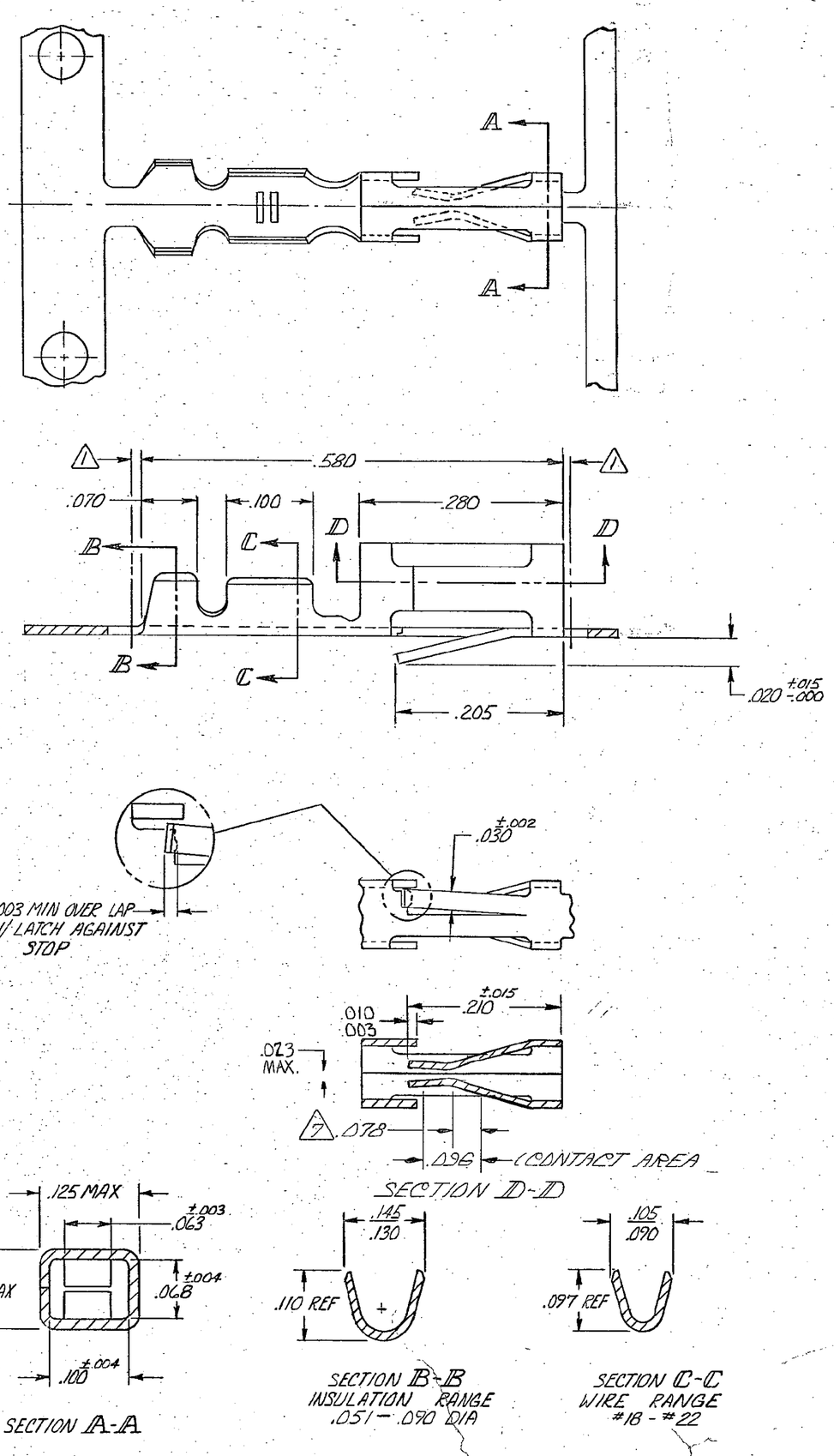

1. .010 MAX CUT-OFF TAB FOR LOOSE PIECE.
2. GOLD FLASH OVER .000050 NICKEL ENTIRE CONTACT, .000015 GOLD ON CONTACT AREA
3. GOLD FLASH OVER .000050 NICKEL ENTIRE CONTACT .000030 GOLD ON CONTACT AREA.
4. .000016 MIN TIN.
5. LUBRICATED
6. .000100-.000200 BRIGHT TIN OVER .000030 NICKEL.
7. POINT OF MEASUREMENT FOR PLATING THICKNESS.
8. .000015 GOLD ON CONTACT AREA, .000050-.000100 BRIGHT TIN-LEAD ON TERMINATION AREA, ALL OVER .000050 NICKEL ENTIRE TERMINAL.
9. .000030 GOLD ON CONTACT AREA, .000050-.000100 BRIGHT TIN-LEAD ON TERMINATION AREA, ALL OVER .000050 NICKEL ENTIRE TERMINAL.
10. OBSOLETED PART NUMBER.

102100

FINISH	LOOSE PIECE P/N	PART NO
9	10 102104-6	102100-9 10
8	10 102104-5	102100-8 10
6 5	10 102104-4	10 102100-6
4 5	102104-3	102100-5
3	102104-2	102100-2
2	102104-1	102100-1

UNLESS OTHERWISE SPECIFIED DIMENSIONS ARE IN INCHES.
TOLERANCES ON:
DECIMALS ±.005
ANGLES ±

MATERIAL: PHOS. BRONZE

FINISH: SEE TABLE

CONTRACT NO

DR H. Bedrin 4/12/78

CHK B. Noble 4-27-78

APPD G. Zimmerman 4/28/78

APPD 5/1/78

DSGN APPD

OTHER APPD

TE Connectivity

NAME: CONTACT, MOD I, RECEPTACLE, CRIMP SNAP-IN, HIGH PRESSURE, #18 - #22AWG, SIDE FEED

SIZE	CODE IDENT NO	DRAWING NO
C	00779	102100

SCALE — SHEET —

CUSTOMER DRAWING

X-ON Electronics

Largest Supplier of Electrical and Electronic Components

Click to view similar products for Headers & Wire Housings ***category:***

Click to view products by TE Connectivity ***manufacturer:***

Other Similar products are found below :

892-18-020-10-001101 58102-G61-06LF 582553-1 0009485154 009176003701906 0050291907 LY20-4P-DT1-P1E-BR 02.125.8002.8 609-3404 61062-3 61082-181009 622-3653LF 63453-116 636-1030 636-1427 636-3427 636-4007 641938-9 641991-4 644827-2 65817-010LF 65817-015LF 65863-015LF 66207-023LF 67095-007LF 67601157 68645-018 68648-049 70.362.1628.0 70-4210 70-4226B 70-4853B 707-5020 707-5028 71.350.2428.0 71918-208LF 71961-016LF 733-134 733-162 754199-000 760-3052 787-8014-00 79531-3000 FCN-360C032-B FCN-367T-T012/H FCN-723D010/2 80.063.4001.1 800-90-001-10-001000 800-90-010-10-002000 801-43-002-10-013000