THIS DRAWING IS UNPUBLISHED. RELEASED FOR PUBLICATION -,- .
© COPYRIGHT - By - ALL RIGHTS RESERVED.

LOC	DIST
GP	00

REVISIONS

P	LTR	DESCRIPTION	DATE	DWN	APVD
	M1	REVISED PER ECO-11-004835	11MAR11	RK	HMR

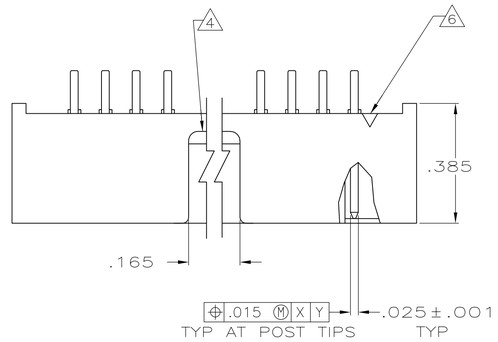

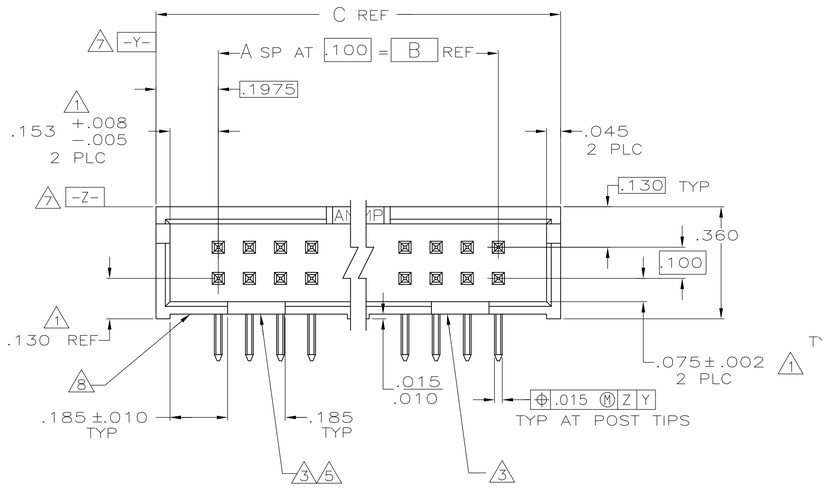

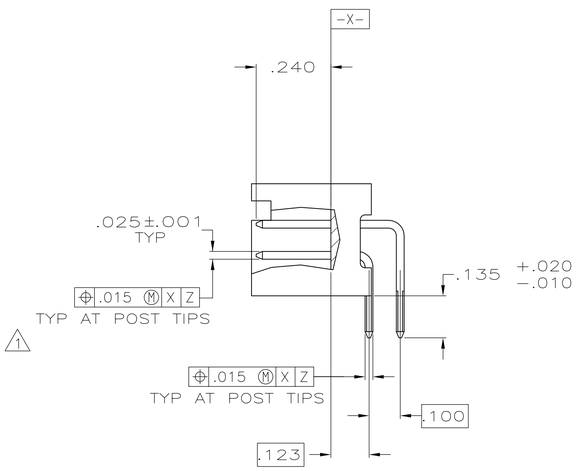

1. THE NOTED DIMENSIONS APPLY AT THE INTERSECTION OF THE POST AND HOUSING
2. POSTS: GOLD FLASH OVER PALLADIUM-NICKEL PLATE, .000030 MIN TOTAL ON THE MATING SUFACES, .000100 MIN TIN-LEAD PLATE ON THE SOLDER-TAILS, .000050 MIN NICKEL UNDERPLATE ON THE ENTIRE POST.
   -OR-
   .000030 MIN GOLD PLATE ON THE MATING SURFACES, .000100 MIN TIN-LEAD PLATE ON THE SOLDER-TAILS, .000050 MIN NICKEL UNDERPLATE ON THE ENTIRE POST.
3. DOUBLE BAR POLARIZATION
4. CENTER POLARIZATION SLOT
5. FOR 10 POSN ASSEMBLY, SLOT OMITTED WHERE INDICATED
6. NUMBER 1 POSITION INDICATOR.
7. DATUMS -Y- AND -Z- APPLY AT THE BASE OF THE SHROUD WALL.
8. OPTIONAL AMP IDENTIFICATION NUMBER (DATE CODE). LOCATION APPROXIMATELY WHERE SHOWN.

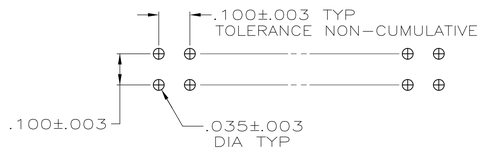

RECOMMENDED HOLE LAYOUT
FOR MANUAL INSERTION

	C	B	A	NO OF POSN	ASSEMBLY PART NUMBER
	3.300	2.900	29	60	1-103311-2
OBSOLETE	3.100	2.700	27	56	1-103311-1
	2.800	2.400	24	50	1-103311-0
OBSOLETE	2.500	2.100	21	44	103311-9
	2.300	1.900	19	40	103311-8
	2.000	1.600	16	34	103311-7
	1.600	1.200	12	26	103311-6
	1.300	.900	9	20	103311-5
OBSOLETE	1.200	.800	8	18	103311-4
	1.100	.700	7	16	103311-3
	1.000	.600	6	14	103311-2
	.800	.400	4	10	103311-1

THIS DRAWING IS A CONTROLLED DOCUMENT.

DIMENSIONS: INCHES

TOLERANCES UNLESS OTHERWISE SPECIFIED:
0 PLC ± -
1 PLC ± -
2 PLC ± -
3 PLC ± .005
4 PLC ± -
ANGLES ± -

MATERIAL: HOUSING: GLASS FILLED NYLON OR PBT, BLACK, UL 94V-0 RATED. POSTS: BRASS
FINISH 2

DWN H MOLL 8-27-87
CHK L A MAYER 9-4-87
APVD R FLICKER 9-4-87
PRODUCT SPEC 108-40018
APPLICATION SPEC —
WEIGHT —

TE Connectivity

NAME HEADER ASSY, LOW PROFILE, AMP-LATCH —

SIZE	CAGE CODE	DRAWING NO	RESTRICTED TO
A1	00779	C-103311	—

CUSTOMER DRAWING | SCALE 4:1 | SHEET 1 OF 1 | REV M1

X-ON Electronics

Largest Supplier of Electrical and Electronic Components

Click to view similar products for Headers & Wire Housings ***category:***

Click to view products by TE Connectivity ***manufacturer:***

Other Similar products are found below :

892-18-020-10-001101 58102-G61-06LF 582553-1 0009485154 009176003701906 0050291907 LY20-4P-DT1-P1E-BR 02.125.8002.8 609-3404 61062-3 61082-181009 622-3653LF 63453-116 636-1030 636-1427 636-3427 636-4007 641938-9 641991-4 644827-2 65817-010LF 65817-015LF 65863-015LF 66207-023LF 67095-007LF 67601157 68645-018 68648-049 70.362.1628.0 70-4210 70-4226B 70-4853B 707-5020 707-5028 71.350.2428.0 71918-208LF 71961-016LF 733-134 733-162 754199-000 760-3052 787-8014-00 79531-3000 FCN-360C032-B FCN-367T-T012/H FCN-723D010/2 80.063.4001.1 800-90-001-10-001000 800-90-010-10-002000 801-43-002-10-013000