THIS DRAWING IS UNPUBLISHED. RELEASED FOR PUBLICATION TE377486 , - .
© COPYRIGHT - By - ALL RIGHTS RESERVED.

REVISIONS

P	LTR	DESCRIPTION	DATE	DWN	APVD
	S	REVISED PER ECO-17-002584	11APR2017	BDA	MM
	T	REVISED PER ECO-20-001323	19JUN2020	SM	JO

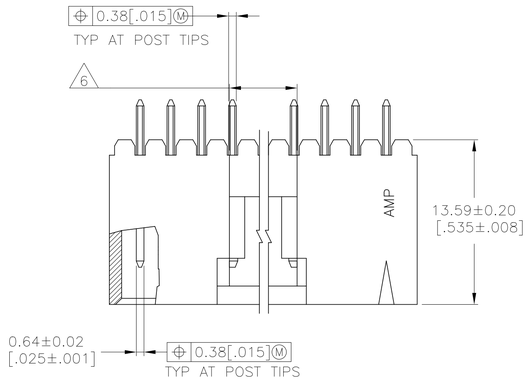

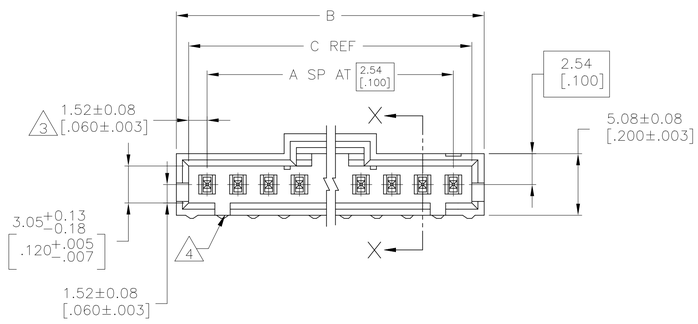

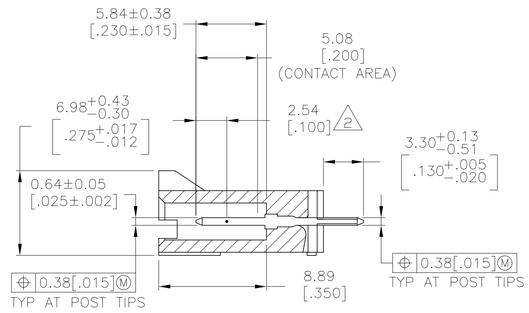

SECTION X–X

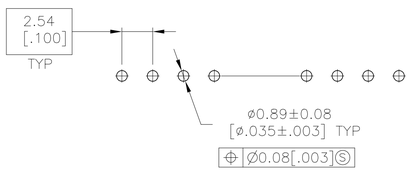

RECOMMENDED HOLE LAYOUT

1. .00038[.000015] GOLD IN THE CONTACT AREA, .00254[.000100] MATTE TIN–LEAD ON REMAINDER OF CONTACT, ALL OVER .00127[.000050] NICKEL.
2. POINT OF MEASUREMENT FOR PLATING THICKNESS.
3. THE NOTED DIMENSIONS APPLY AT THE INTERSECTION OF THE POST AND THE HOUSING.
4. ON ASSEMBLIES WITH FOUR OR MORE POSITIONS, TWO POLARIZATION SLOTS. ON ASSEMBLIES WITH TWO OR THREE POSITIONS, ONE POLARIZATION SLOT.
5. OBSOLETE PARTS: OBSOLETE CIS STREAMLINING PER D.RENAUD/D.SINISI
6. 0.25 [.010] RECESS PERMISSIBLE IN THIS AREA FOR MOLD SHUT OFF

	C	B	A	NO. OF POSN	PART NO.
5 SUPERCEDED BY 7-104910-4	64.01 [2.520]	65.91 [2.595]	24	25	~~2-103638-4~~
5 SUPERCEDED BY 7-104910-3	61.47 [2.420]	63.37 [2.495]	23	24	~~2-103638-3~~
5 SUPERCEDED BY 7-104910-2	58.93 [2.320]	60.83 [2.395]	22	23	~~2-103638-2~~
	56.39 [2.220]	58.29 [2.295]	21	22	2-103638-1
5 SUPERCEDED BY 7-104910-0	53.85 [2.120]	55.75 [2.195]	20	21	~~2-103638-0~~
	51.31 [2.020]	53.21 [2.095]	19	20	1-103638-9
5 SUPERCEDED BY 6-104910-8	48.77 [1.920]	50.67 [1.995]	18	19	~~1-103638-8~~
	46.23 [1.820]	48.13 [1.895]	17	18	1-103638-7
	43.69 [1.720]	45.59 [1.795]	16	17	1-103638-6
	41.15 [1.620]	43.05 [1.695]	15	16	1-103638-5
	38.61 [1.520]	40.51 [1.595]	14	15	1-103638-4
	36.07 [1.420]	37.97 [1.495]	13	14	1-103638-3
	33.53 [1.320]	35.43 [1.395]	12	13	1-103638-2
	30.99 [1.220]	32.89 [1.295]	11	12	1-103638-1
	28.45 [1.120]	30.35 [1.195]	10	11	1-103638-0
	25.91 [1.020]	27.81 [1.095]	9	10	103638-9
	23.37 [.920]	25.27 [.995]	8	9	103638-8
	20.83 [.820]	22.73 [.895]	7	8	103638-7
	18.29 [.720]	20.19 [.795]	6	7	103638-6
	15.75 [.620]	17.65 [.695]	5	6	103638-5
	13.21 [.520]	15.11 [.595]	4	5	103638-4
	10.67 [.420]	12.57 [.495]	3	4	103638-3
	8.13 [.320]	10.03 [.395]	2	3	103638-2
	5.59 [.220]	7.49 [.295]	1	2	103638-1

THIS DRAWING IS A CONTROLLED DOCUMENT.

DIMENSIONS: mm [INCHES]

TOLERANCES UNLESS OTHERWISE SPECIFIED:
0 PLC ± –
1 PLC ± –
2 PLC ± 0.13[.005]
3 PLC ± –
4 PLC ± –
ANGLES ± –

MATERIAL: HOUSING :FLAME RETARDANT LCP,COLOR BLACK; CONTACTS: BRASS

FINISH: 1

DWN S. SHUEY 3-5-91
CHK J. GESFORD 3-5-91
APVD J. GESFORD 3-5-91
PRODUCT SPEC 108-25034
APPLICATION SPEC 114-25026
WEIGHT –

TE Connectivity

NAME: HDR ASSY, VERT, SINGLE ROW 2.54[.100] CL, 0.64[.025] SQ POST, WITH HOLDING, &AMPMODU MTE

SIZE A1 | CAGE CODE 00779 | DRAWING NO C-103638 | RESTRICTED TO –

CUSTOMER DRAWING | SCALE 4:1 | SHEET 1 OF 1 | REV T

4805 (1/15)

X-ON Electronics

Largest Supplier of Electrical and Electronic Components

Click to view similar products for Headers & Wire Housings ***category:***

Click to view products by TE Connectivity ***manufacturer:***

Other Similar products are found below :

892-18-020-10-001101 58102-G61-06LF 582553-1 0009485154 009176003701906 0050291907 LY20-4P-DT1-P1E-BR 02.125.8002.8 609-3404 61062-3 61082-181009 622-3653LF 63453-116 636-1030 636-1427 636-3427 636-4007 641938-9 641991-4 644827-2 65817-010LF 65817-015LF 65863-015LF 66207-023LF 67095-007LF 67601157 68645-018 68648-049 70.362.1628.0 70-4210 70-4226B 70-4853B 707-5020 707-5028 71.350.2428.0 71918-208LF 71961-016LF 733-134 733-162 754199-000 760-3052 787-8014-00 79531-3000 FCN-360C032-B FCN-367T-T012/H FCN-723D010/2 80.063.4001.1 800-90-001-10-001000 800-90-010-10-002000 801-43-002-10-013000