THIS DRAWING IS UNPUBLISHED. RELEASED FOR PUBLICATION -.- .
© COPYRIGHT - BY TYCO ELECTRONICS CORPORATION, ALL RIGHTS RESERVED.

LOC	DIST
AD	39

REVISIONS

P	LTR	DESCRIPTION	DATE	DWN	APVD
	M	REV PER 0G3C-0373-02	11OCT02	RB	JG

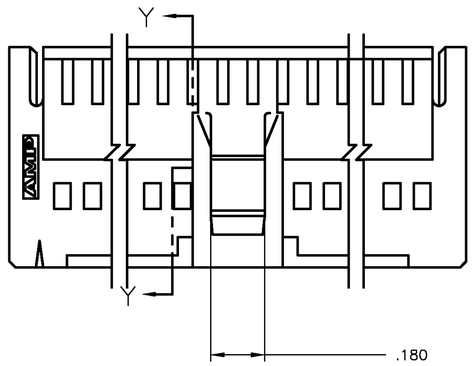

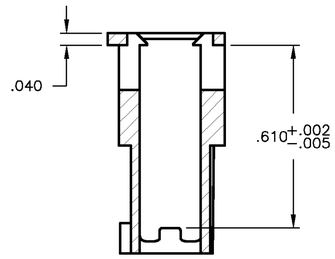

SECTION Y—Y

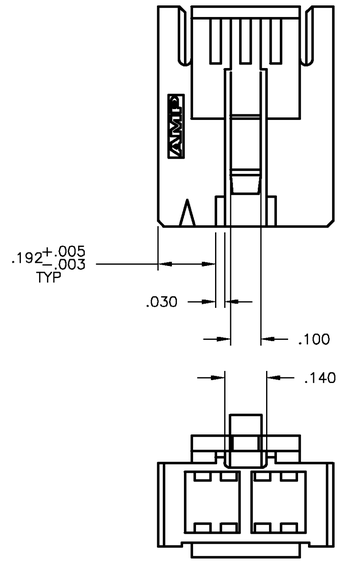

LATCH CONFIGURATION
FOR 6, 8 AND 10 POSN
(SEE TABLE)

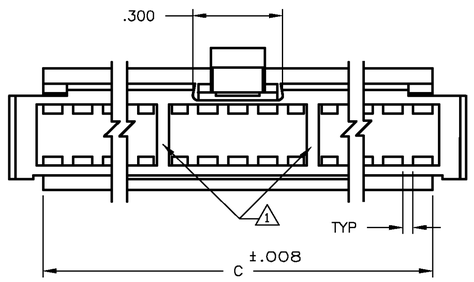

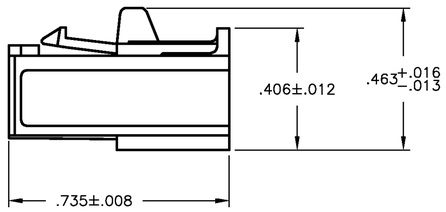

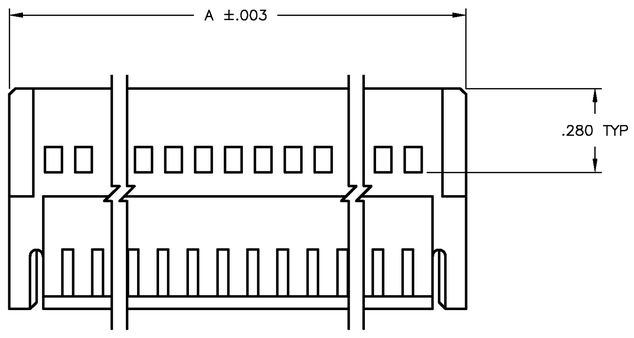

1. SEE TABLE FOR RIB QTY
2. THIS COUPLING SHROUD IS TO BE USED WITH AMPMODU MTE® RECEPTACLE ASSEMBLIES WITH GUIDE RIBS THE NUMBER OF POSITIONS LISTED EQUALS THE TOTAL NUMBER OF POSITIONS WHICH CAN BE CONTAINED WITHIN THE COUPLING SHROUD
3. FLAME RETARDANT THERMOPLASTIC, COLOR—BLACK.
4. PRELIMINARY PART — NOT RELEASED FOR PRODUCTION.

	RIB QTY	C	A	NO OF POSN	PART NUMBER
4	1	.260	.485	6	1-103681-7
SUPERSEDED BY 1-104500-1	2	2.460	2.685	50	1-103681-6
SUPERSEDED BY 1-104500-0	2	1.960	2.185	40	1-103681-5
SUPERSEDED BY 104500-9	2	1.660	1.885	34	1-103681-4
SUPERSEDED BY 104500-8	2	1.560	1.785	32	1-103681-3
SUPERSEDED BY 104500-7	2	1.460	1.685	30	1-103681-2
SUPERSEDED BY 104500-6	2	1.360	1.585	28	1-103681-1
SUPERSEDED BY 104500-5	2	1.260	1.485	26	1-103681-0
SUPERSEDED BY 104500-4	2	1.160	1.385	24	103681-9
SUPERSEDED BY 104500-3	2	1.060	1.285	22	103681-8
SUPERSEDED BY 104500-2	2	.960	1.185	20	103681-7
SUPERSEDED BY 104500-1	2	.860	1.085	18	103681-6
	1	.760	.985	16	103681-5
	1	.660	.885	14	103681-4
	1	.560	.785	12	103681-3
	1	.460	.685	10	103681-2
	1	.360	.585	8	103681-1

THIS DRAWING IS A CONTROLLED DOCUMENT.

DIMENSIONS: INCHES

TOLERANCES UNLESS OTHERWISE SPECIFIED:
0 PLC ± –
1 PLC ± –
2 PLC ± –
3 PLC ± .005
4 PLC ± –
ANGLES ± –

MATERIAL 3
FINISH –

DWN H MOLL 10-7-87
CHK P de JONG 10-7-87
APVD –

PRODUCT SPEC 108-25034
APPLICATION SPEC 114-25026
WEIGHT –

AMP Tyco Electronics Corporation
Harrisburg, PA 17105

NAME COUPLING SHROUD, AMPMODU MTE, .100X.100 C/L, DOUBLE ROW

SIZE	CAGE CODE	DRAWING NO	RESTRICTED TO
A1	00779	C-103681	—

CUSTOMER DRAWING | SCALE 4:1 | SHEET 1 OF 1 | REV M

X-ON Electronics

Largest Supplier of Electrical and Electronic Components

Click to view similar products for Headers & Wire Housings ***category:***

Click to view products by TE Connectivity ***manufacturer:***

Other Similar products are found below :

892-18-020-10-001101 58102-G61-06LF 582553-1 0009485154 009176003701906 0050291907 LY20-4P-DT1-P1E-BR 02.125.8002.8 609-3404 61062-3 61082-181009 622-3653LF 63453-116 636-1030 636-1427 636-3427 636-4007 641938-9 641991-4 644827-2 65817-010LF 65817-015LF 65863-015LF 66207-023LF 67095-007LF 67601157 68645-018 68648-049 70.362.1628.0 70-4210 70-4226B 70-4853B 707-5020 707-5028 71.350.2428.0 71918-208LF 71961-016LF 733-134 733-162 754199-000 760-3052 787-8014-00 79531-3000 FCN-360C032-B FCN-367T-T012/H FCN-723D010/2 80.063.4001.1 800-90-001-10-001000 800-90-010-10-002000 801-43-002-10-013000