THIS DRAWING IS UNPUBLISHED. RELEASED FOR PUBLICATION -,- .
© COPYRIGHT - By - ALL RIGHTS RESERVED.

LOC	DIST
AD	00

REVISIONS

P	LTR	DESCRIPTION	DATE	DWN	APVD
	H	REVISED PER ECO-14-000068	28APR2014	NK	MM

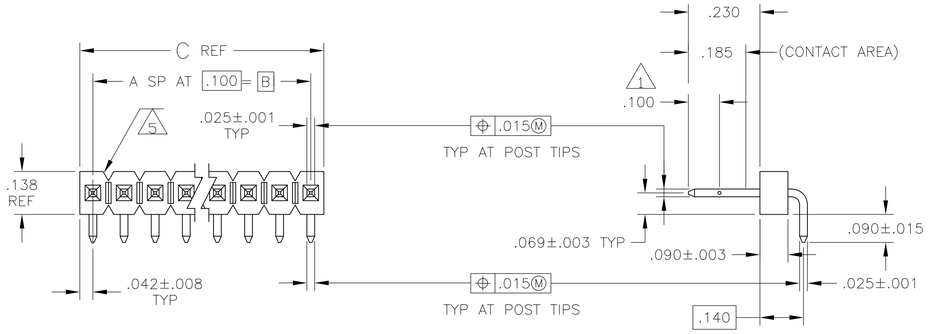

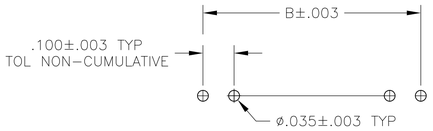

RECOMMENDED HOLE LAYOUT

	REMARKS	PLATING	C	B	A	NO OF POS	ASSEMBLY PART NUMBER
	7	6	3.984	3.900	39	40	9-103765-0
OBSOLETE	7	6	~~3.484~~	~~3.400~~	~~34~~	~~35~~	~~8 - 5~~
OBSOLETE	7	6	~~2.984~~	~~2.900~~	~~29~~	~~30~~	~~8 - 0~~
OBSOLETE	7	6	~~2.484~~	~~2.400~~	~~24~~	~~25~~	~~7 - 5~~
	7	6	1.984	1.900	19	20	7 - 0
OBSOLETE	7	6	~~1.484~~	~~1.400~~	~~14~~	~~15~~	~~6 - 5~~
	7	6	1.384	1.300	13	14	6 - 4
OBSOLETE	7	6	~~1.284~~	~~1.200~~	~~12~~	~~13~~	~~6 - 3~~
OBSOLETE	7	6	~~1.184~~	~~1.100~~	~~11~~	~~12~~	~~6 - 2~~
	7	6	1.084	1.000	10	11	6 - 1
	7	6	.984	.900	9	10	6 - 0
OBSOLETE	7	6	~~.884~~	~~.800~~	~~8~~	~~9~~	~~5 - 9~~
	7	6	.784	.700	7	8	5 - 8
OBSOLETE	7	6	~~.684~~	~~.600~~	~~6~~	~~7~~	~~5 - 7~~
	7	6	.584	.500	5	6	5 - 6
	7	6	.484	.400	4	5	5 - 5
	7	6	.384	.300	3	4	5 - 4
	7	6	.284	.200	2	3	5 - 3
	7	6	~~.184~~	~~.100~~	~~1~~	~~2~~	~~5 - 2~~
OBSOLETE	7	6	~~.084~~	——	——	~~1~~	~~5-103765-1~~
		4	3.984	3.900	39	40	4-103765-0
OBSOLETE		4	3.884	3.800	38	39	3 - 9
OBSOLETE		4	3.784	3.700	37	38	3 - 8
OBSOLETE		4	3.684	3.600	36	37	3 - 7
OBSOLETE		4	3.584	3.500	35	36	3 - 6
8 OBSOLETE		4	~~3.484~~	~~3.400~~	~~34~~	~~35~~	~~3 - 5~~
OBSOLETE		4	3.284	3.300	33	34	3 - 4
OBSOLETE		4	3.284	3.200	32	33	3 - 3
OBSOLETE		4	3.184	3.100	31	32	3 - 2
OBSOLETE		4	3.084	3.000	30	31	3 - 1
8 OBSOLETE		4	~~2.984~~	~~2.900~~	~~29~~	~~30~~	~~3 - 0~~
OBSOLETE		4	2.884	2.800	28	29	2 - 9
OBSOLETE		4	2.784	2.700	27	28	2 - 8
OBSOLETE		4	2.684	2.600	26	27	2 - 7
OBSOLETE		4	2.584	2.500	25	26	2 - 6
8 OBSOLETE		4	~~2.484~~	~~2.400~~	~~24~~	~~25~~	~~2 - 5~~
OBSOLETE		4	2.384	2.300	23	24	2 - 4
OBSOLETE		4	2.284	2.200	22	23	2 - 3
OBSOLETE		4	2.184	2.100	21	22	2 - 2
OBSOLETE		4	2.084	2.000	20	21	2 - 1
		4	1.984	1.900	19	20	2 - 0
OBSOLETE		4	1.884	1.800	18	19	1 - 9
OBSOLETE		4	1.784	1.700	17	18	1 - 8
OBSOLETE		4	1.684	1.600	16	17	1 - 7
OBSOLETE		4	1.584	1.500	15	16	1 - 6
		4	1.484	1.400	14	15	1 - 5
8 SUPERCEDED BY 6-103765-4		4	~~1.384~~	~~1.300~~	~~13~~	~~14~~	~~1 - 4~~
8 OBSOLETE		4	~~1.284~~	~~1.200~~	~~12~~	~~13~~	~~1 - 3~~
		4	1.184	1.100	11	12	1 - 2
8 SUPERCEDED BY 6-103765-1		4	~~1.084~~	~~1.000~~	~~10~~	~~11~~	~~1 - 1~~
		4	~~.984~~	~~.900~~	~~9~~	~~10~~	~~1 - 0~~
8 OBSOLETE		4	~~.884~~	~~.800~~	~~8~~	~~9~~	~~9~~
		4	.784	.700	7	8	- 8
8 OBSOLETE		4	~~.684~~	~~.600~~	~~6~~	~~7~~	~~7~~
		4	.584	.500	5	6	- 6
		4	.484	.400	4	5	- 5
		4	.384	.300	3	4	- 4
		4	.284	.200	2	3	- 3
		4	.184	.100	1	2	- 2
8 OBSOLETE		4	~~.084~~	——	——	~~1~~	~~103765-1~~

1. POINT OF MEASUREMENT FOR PLATING THICKNESS
2. ASSEMBLY MAY BE BROKEN TO THE DESIRED NUMBER OF POSITIONS.
3. TRUE POSITION TOLERANCE OF THE POST TIPS APPLIES WHEN THE HEADERS ARE HELD FLAT AGAINST THE PRINTED CIRCUIT BOARD
4. .000030 GOLD IN CONTACT AREA, .000100-.000200 MATTE TIN-LEAD ON SOLDER TAIL, ALL OVER .000050 NICKEL
5. BREAKAWAY NOTCH ANGLE CAN BE ORIENTED TO THE RIGHT (AS SHOWN) OR TO THE LEFT
6. .000030 GOLD IN CONTACT AREA, .000100-.000200 MATTE TIN ON SOLDER TAIL, ALL OVER .000050 NICKEL
7. HIGH TEMPERATURE CONFIGURATION
8. OBSOLETE PARTS: OBSOLETE CIS STREAMLINING PER D.RENAUD/D.SINISI

THIS DRAWING IS A CONTROLLED DOCUMENT.

DIMENSIONS: INCHES

TOLERANCES, UNLESS OTHERWISE SPECIFIED:
0 PLC ± -
1 PLC ± -
2 PLC ± -
3 PLC ± .005
4 PLC ± -
ANGLES ± -

MATERIAL: HOUSING: FLAME RETARDANT THERMOPLASTIC, COLOR-BLACK; POSTS: COPPER ALLOY

FINISH: SEE TABLE

DWN L. D. RINGLEY 24JUL85
CHK R. ELICKER 24JUL85
APVD R. ELICKER 24JUL85

PRODUCT SPEC —
APPLICATION SPEC —
WEIGHT —

TE Connectivity

NAME: ASSEMBLY, MOD II, HEADER, BREAKAWAY, SINGLE ROW, RIGHT ANGLE 100, , WITH .025 SQUARE POSTS

SIZE	CAGE CODE	DRAWING NO	RESTRICTED TO
A1	00779	C-103765	—

CUSTOMER DRAWING | SCALE 4:1 | SHEET 1 OF 1 | REV H

X-ON Electronics

Largest Supplier of Electrical and Electronic Components

Click to view similar products for Headers & Wire Housings ***category:***

Click to view products by TE Connectivity ***manufacturer:***

Other Similar products are found below :

892-18-020-10-001101 58102-G61-06LF 582553-1 0009485154 009176003701906 0050291907 LY20-4P-DT1-P1E-BR 02.125.8002.8 609-3404 61062-3 61082-181009 622-3653LF 63453-116 636-1030 636-1427 636-3427 636-4007 641938-9 641991-4 644827-2 65817-010LF 65817-015LF 65863-015LF 66207-023LF 67095-007LF 67601157 68645-018 68648-049 70.362.1628.0 70-4210 70-4226B 70-4853B 707-5020 707-5028 71.350.2428.0 71918-208LF 71961-016LF 733-134 733-162 754199-000 760-3052 787-8014-00 79531-3000 FCN-360C032-B FCN-367T-T012/H FCN-723D010/2 80.063.4001.1 800-90-001-10-001000 800-90-010-10-002000 801-43-002-10-013000