THIS DRAWING IS UNPUBLISHED. RELEASED FOR PUBLICATION -,- .
© COPYRIGHT - BY TYCO ELECTRONICS CORPORATION. ALL RIGHTS RESERVED.

LOC	DIST
AD	00

REVISIONS

P	LTR	DESCRIPTION	DATE	DWN	APVD
	P	EC 0G3C 0766 04	27DEC04	BSV	JLG
	P1	REVISED PER ECO-09-020932	26AUG09	KK	AEG

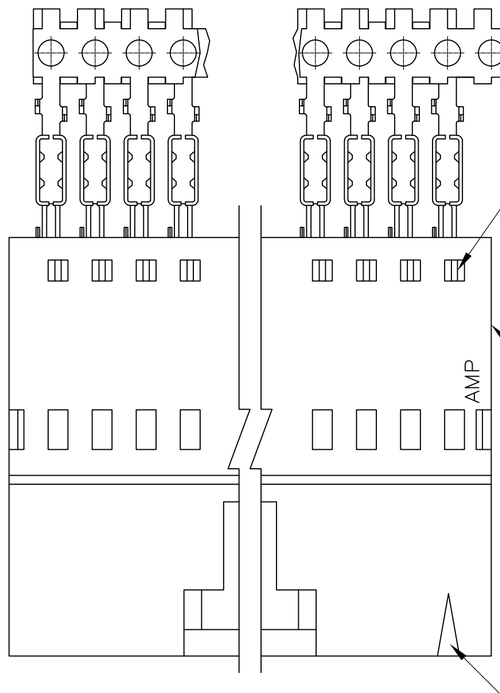

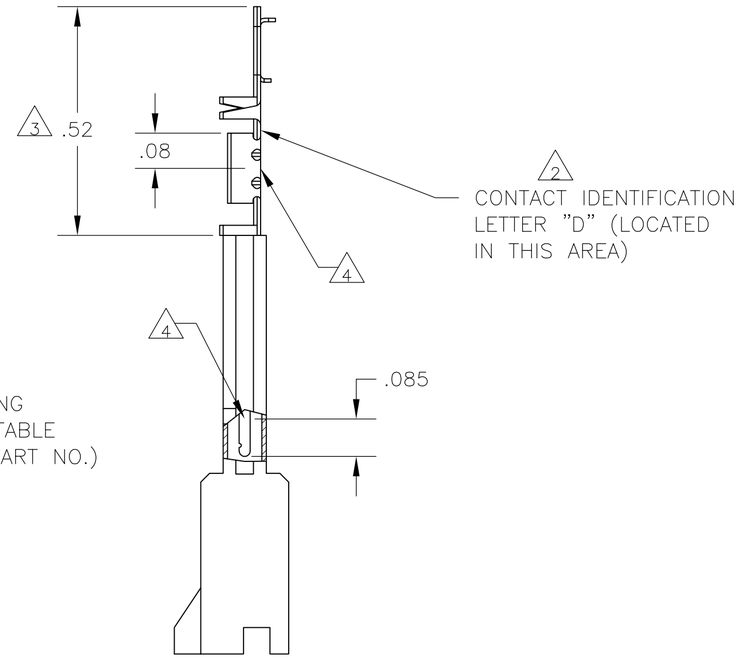

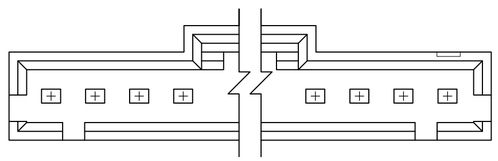

OBSOLETE 9	8	2-103653-4	25	7-103660-4
	8	2-103653-3	24	7-103660-3
	8	2-103653-2	23	7-103660-2
	8	2-103653-1	22	7-103660-1
	8	2-103653-0	21	7-103660-0
	8	1-103653-9	20	6-103660-9
OBSOLETE 9	8	1-103653-8	19	6-103660-8
	8	1-103653-7	18	6-103660-7
	8	1-103653-6	17	6-103660-6
	8	1-103653-5	16	6-103660-5
OBSOLETE 9	8	1-103653-4	15	6-103660-4
	8	1-103653-3	14	6-103660-3
	8	1-103653-2	13	6-103660-2
OBSOLETE 9	7	2-103653-4	25	2-103660-4
	7	2-103653-3	24	2-103660-3
OBSOLETE 9	7	2-103653-2	23	2-103660-2
	7	2-103653-1	22	2-103660-1
	7	2-103653-0	21	2-103660-0
	7	1-103653-9	20	1-103660-9
OBSOLETE 9	7	1-103653-8	19	1-103660-8
	7	1-103653-7	18	1-103660-7
	7	1-103653-6	17	1-103660-6
SUPERSEDED 9	7	1-103653-5	16	1-103660-5
	7	1-103653-4	15	1-103660-4
	7	1-103653-3	14	1-103660-3
SUPERSEDED 9	7	1-103653-2	13	1-103660-2
SUPERSEDED BY 1-103945-1		1-103653-1	12	1-103660-1
SUPERSEDED BY 1-103945-0		1-103653-0	11	1-103660-0
SUPERSEDED BY 103945-9		103653-9	10	103660-9
SUPERSEDED BY 103945-8		103653-8	9	103660-8
SUPERSEDED BY 103945-7		103653-7	8	103660-7
SUPERSEDED BY 103945-6		103653-6	7	103660-6
SUPERSEDED BY 103945-5		103653-5	6	103660-5
SUPERSEDED BY 103945-4		103653-4	5	103660-4
SUPERSEDED BY 103945-3		103653-3	4	103660-3
SUPERSEDED BY 103945-2		103653-2	3	103660-2
SUPERSEDED BY 103945-1		103653-1	2	103660-1
	PLATING	HOUSING PART NUMBER	NO OF POSN	ASSEMBLY PART NUMBER

1. CONTACTS ARE LATCHED INTO THE PRELOAD WINDOWS
2. USE WITH #22-#26 AWG WIRE SIZE, .054/.030 INSULATION DIAMETER, .015 MAXIMUM INSULATION THICKNESS
3. THE DIMENSION APPLIES WITH THE FORWARD PRELOAD STOP IN CONTACT WITH THE HOUSING SURFACE
4. POINT OF MEASUREMENT FOR PLATING THICKNESS
5. FOR STRIP ASSEMBLIES SEE PART NUMBER 103945
6. MATERIAL- HOUSING: FLAME RETARDANT THERMOPLASTIC, COLOR: BLACK PINS: PHOS. BRONZE
7. FINISH- PINS: .000015 GOLD IN THE CONTACT AREA, .000050-.000100 BRIGHT TIN-LEAD ON THE TERMINATION AREA, OVER .000050 NICKEL.
8. FINISH- PINS: .000015 GOLD IN THE CONTACT AREA, .000050-.000100 MATTE TIN ON THE TERMINATION AREA, OVER .000050 NICKEL.
9. OBSOLETE PARTS: OBSOLETE CIS STREAMLINING PER D.RENAUD/D.SINISI

THIS DRAWING IS A CONTROLLED DOCUMENT.

DIMENSIONS: INCHES

TOLERANCES UNLESS OTHERWISE SPECIFIED:
0 PLC ± -
1 PLC ± -
2 PLC ± -
3 PLC ± -
4 PLC ± -
ANGLES ± -

MATERIAL 6

FINISH SEE TABLE

DWN R.BROWN 26JUL00
CHK K.WRIGHT 26JUL00
APVD K.WRIGHT 26JUL00
PRODUCT SPEC 108-25034
APPLICATION SPEC 114-25026
WEIGHT -

Tyco Electronics
Tyco Electronics Corporation
Harrisburg, Pa 17105-3608

NAME SHROUDED PIN ASSY, AMPMODU MTE, SINGLE ROW, .100 CL, POLARIZED, WITH LATCH WINDOWS, FOR #22-#26 AWG WIRE SIZE

SIZE	CAGE CODE	DRAWING NO	RESTRICTED TO
A2	00779	C-103660	-

CUSTOMER DRAWING SCALE 4:1 SHEET 1 OF 1 REV P1

103660

X-ON Electronics

Largest Supplier of Electrical and Electronic Components

Click to view similar products for Headers & Wire Housings ***category:***

Click to view products by TE Connectivity ***manufacturer:***

Other Similar products are found below :

892-18-020-10-001101 58102-G61-06LF 582553-1 0009485154 009176003701906 0050291907 LY20-4P-DT1-P1E-BR 02.125.8002.8 609-3404 61062-3 61082-181009 622-3653LF 63453-116 636-1030 636-1427 636-3427 636-4007 641938-9 641991-4 644827-2 65817-010LF 65817-015LF 65863-015LF 66207-023LF 67095-007LF 67601157 68645-018 68648-049 70.362.1628.0 70-4210 70-4226B 70-4853B 707-5020 707-5028 71.350.2428.0 71918-208LF 71961-016LF 733-134 733-162 754199-000 760-3052 787-8014-00 79531-3000 FCN-360C032-B FCN-367T-T012/H FCN-723D010/2 80.063.4001.1 800-90-001-10-001000 800-90-010-10-002000 801-43-002-10-013000