THIS DRAWING IS UNPUBLISHED. RELEASED FOR PUBLICATION -,- .
© COPYRIGHT - By - ALL RIGHTS RESERVED.

LOC	DIST
AD	00

REVISIONS

P	LTR	DESCRIPTION	DATE	DWN	APVD
	L2	REVISED PER ECO-11-004917	11MAR11	RK	HMR

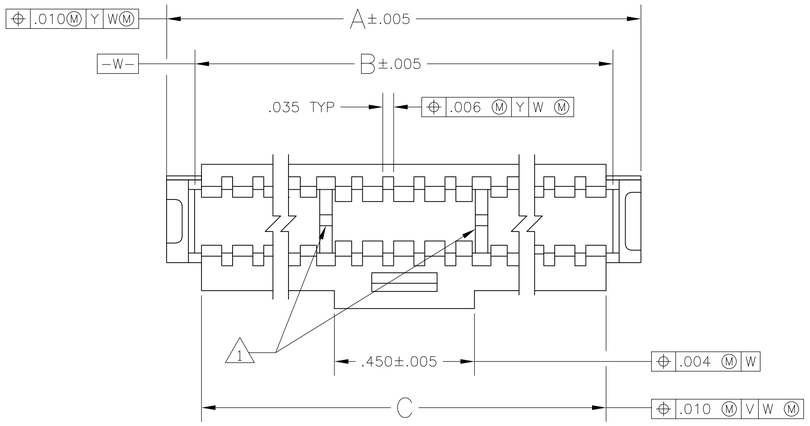

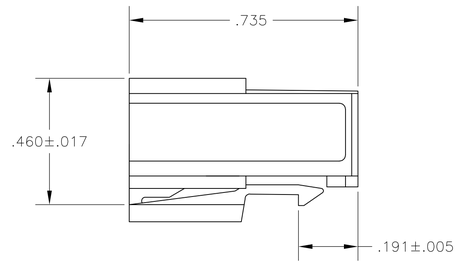

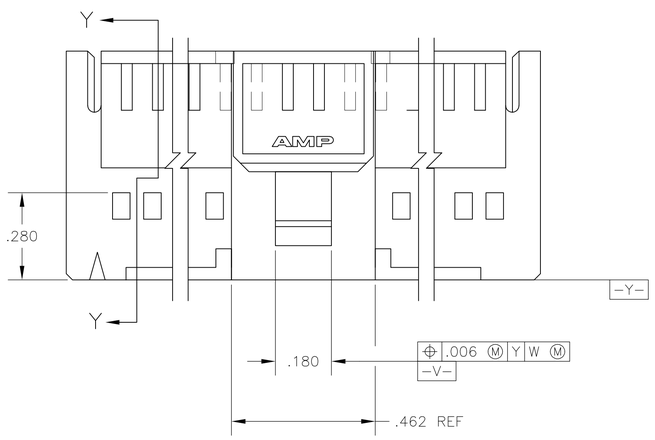

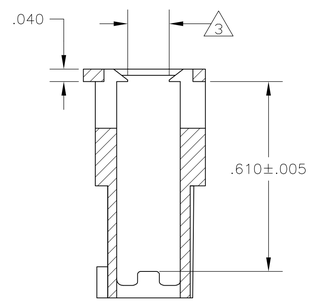

SECTION Y-Y

1. SEE TABLE FOR RIB QTY

2. THIS COUPLING SHROUD IS TO BE USED WITH AMPMODU® MTE RECEPTACLE ASSEMBLIES WITH GUIDE RIBS THE NUMBER OF POSITIONS LISTED EQUALS THE TOTAL NUMBER OF POSITIONS WHICH CAN BE CONTAINED WITHIN THE COUPLING SHROUD

3. .133 BETWEEN RIBS REFERENCED BY NOTE 1 ONLY. .153 ON ENDS (AREAS OUTSIDE OF THE RIBS).

4. OBSOLETE PARTS: OBSOLETE CIS STREAMLINING PER D.RENAUD/D.SINISI

	C	B	A	NO OF RIBS	NO OF POSN	PART NUMBER
	2.460	2.505	2.685	2	50	1-104500-1
	1.960	2.005	2.085	2	40	1-104500-0
4 OBSOLETE	1.660	1.705	1.885	2	34	~~104500-9~~
	1.560	1.605	1.785	2	32	104500-8
OBSOLETE 4	1.460	1.505	1.685	2	30	~~104500-7~~
	1.360	1.405	1.585	2	28	~~104500-6~~
	1.260	1.305	1.485	2	26	~~104500-5~~
	1.160	1.205	1.385	2	24	104500-4
	1.060	1.105	1.285	2	22	104500-3
	.960	1.005	1.185	2	20	104500-2
4 OBSOLETE	.860	.905	1.085	2	18	~~104500-1~~

THIS DRAWING IS A CONTROLLED DOCUMENT.

DIMENSIONS: INCHES

TOLERANCES UNLESS OTHERWISE SPECIFIED:
0 PLC ± -
1 PLC ± -
2 PLC ± -
3 PLC ± .010
4 PLC ± -
ANGLES ± -

MATERIAL: FLAME RETARDANT THERMOPLASTIC COLOR-BLACK

FINISH: -

DWN D KEITZER 01DEC88
CHK S.SHUEY 07DEC88
APVD C.SINISI 14DEC88

PRODUCT SPEC 108-25034
APPLICATION SPEC 114-25026
WEIGHT -

TE Connectivity

NAME: COUPLING SHROUD, AMPMODU® MTE, DOUBLE ROW, .100X.100 CL

SIZE	CAGE CODE	DRAWING NO	RESTRICTED TO
A1	00779	C-104500	-

CUSTOMER DRAWING | SCALE 4:1 | SHEET 1 OF 1 | REV L2

X-ON Electronics

Largest Supplier of Electrical and Electronic Components

Click to view similar products for Headers & Wire Housings ***category:***

Click to view products by TE Connectivity ***manufacturer:***

Other Similar products are found below :

892-18-020-10-001101 58102-G61-06LF 582553-1 0009485154 009176003701906 0050291907 LY20-4P-DT1-P1E-BR 02.125.8002.8 609-3404 61062-3 61082-181009 622-3653LF 63453-116 636-1030 636-1427 636-3427 636-4007 641938-9 641991-4 644827-2 65817-010LF 65817-015LF 65863-015LF 66207-023LF 67095-007LF 67601157 68645-018 68648-049 70.362.1628.0 70-4210 70-4226B 70-4853B 707-5020 707-5028 71.350.2428.0 71918-208LF 71961-016LF 733-134 733-162 754199-000 760-3052 787-8014-00 79531-3000 FCN-360C032-B FCN-367T-T012/H FCN-723D010/2 80.063.4001.1 800-90-001-10-001000 800-90-010-10-002000 801-43-002-10-013000