DRAWING MADE IN THIRD ANGLE PROJECTION

THIS DRAWING IS UNPUBLISHED. RELEASED FOR PUBLICATION ,19 .
© COPYRIGHT 19 BY AMP INCORPORATED. ALL INTERNATIONAL RIGHTS RESERVED.

LOC	DIST	P	F
GP	00		

REVISIONS

ZONE	LTR	DESCRIPTION	DATE	APPD
	K1	REVISED PER ECO 05-008301	11MAY06	JG

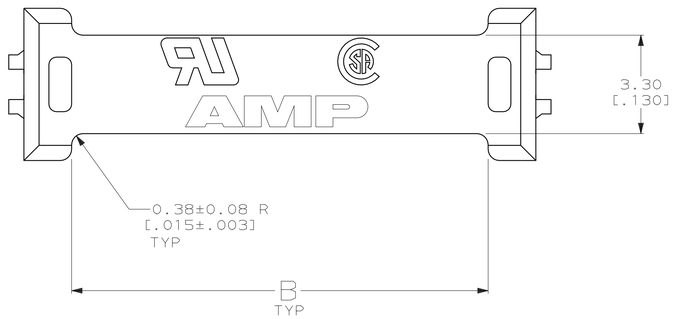

1. POLYESTER, BLACK, UL94 V-0.
2. CORING CONFIGURATION VARIES BY PART SIZE.
3. MAXIMUM ACCEPTABLE CABLE THICKNESS 0.97[.038].

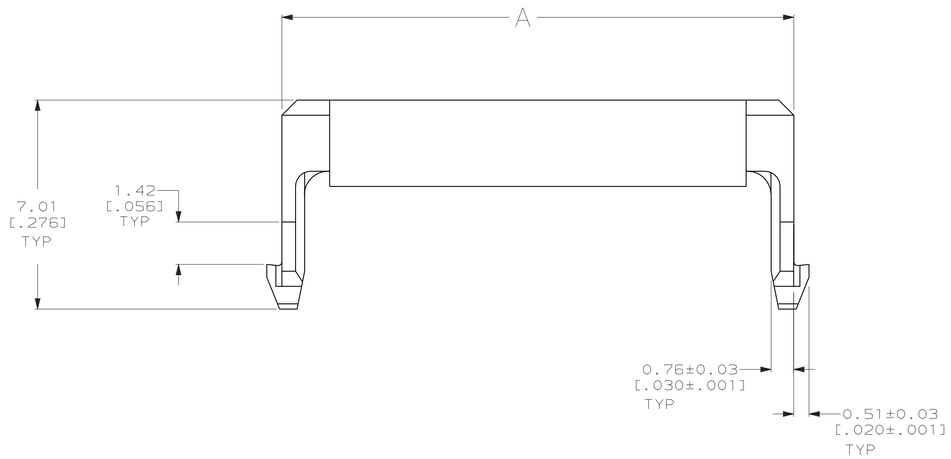

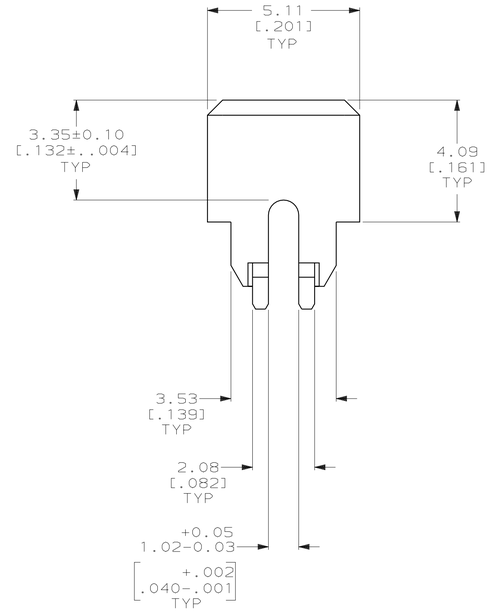

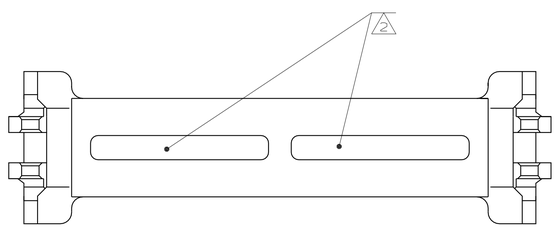

B	A	NO OF POSN	PART NO
11.94 [.470]	15.14 [.596]	12	1-111614-7
7.98 [.314]	11.18 [.440]	8	1-111614-6
21.97 [.865]	25.17 [.991]	22	1-111614-5
67.97 [2.676]	71.17 [2.802]	68	1-111614-4
63.96 [2.518]	67.18 [2.645]	64	1-111614-3
59.97 [2.361]	63.17 [2.487]	60	1-111614-2
49.96 [1.967]	53.16 [2.093]	50	1-111614-1
43.97 [1.731]	47.17 [1.857]	44	1-111614-0
39.98 [1.574]	43.18 [1.700]	40	111614-9
33.96 [1.337]	37.16 [1.463]	34	111614-8
29.97 [1.180]	33.17 [1.306]	30	111614-7
25.96 [1.022]	29.16 [1.148]	26	111614-6
23.98 [.944]	27.18 [1.070]	24	111614-5
19.96 [.786]	23.16 [.912]	20	111614-4
15.98 [.629]	19.18 [.755]	16	111614-3
13.97 [.550]	17.17 [.676]	14	111614-2
9.96 [.392]	13.16 [.518]	10	111614-1

PART NO

DO NOT SCALE PRINT.
UNLESS SPECIFIED
DIMENSIONS IN mm [INCHES]
TOLERANCES ON :
2 PLC DEC ± 0.05 [.002]
3 PLC DEC ± -
ANGLES ± -

MATERIAL 1

FINISH -

DR 02-21-92 C.OBERMAN
CHK 03-2-92 R.STONE
APPD 03-2-92 R.LOCATI
APPD 03-3-92 D.HOFFMAN

PRODUCT SPEC 108-1372

APPLICATION SPEC -

WEIGHT -

AMP Incorporated
Harrisburg, PA 17105-3608

NAME STRAIN RELIEF, 2mm CL, AMP-LATCH

SIZE D | CAGE CODE 00779 | DRAWING NO 111614

SCALE 10:1 | SHEET 1 OF 1

AMP 1756-3 REV 11-89

CUSTOMER DRAWING

05-JAN-98 14:06:21 amp38585 /home/ssrv026d/dsk02/dept4021/amp38585/edmmod

X-ON Electronics

Largest Supplier of Electrical and Electronic Components

Click to view similar products for Headers & Wire Housings ***category:***

Click to view products by TE Connectivity ***manufacturer:***

Other Similar products are found below :

892-18-020-10-001101 58102-G61-06LF 582553-1 0009485154 009176003701906 0050291907 LY20-4P-DT1-P1E-BR 02.125.8002.8 609-3404 61062-3 61082-181009 622-3653LF 63453-116 636-1030 636-1427 636-3427 636-4007 641938-9 641991-4 644827-2 65817-010LF 65817-015LF 65863-015LF 66207-023LF 67095-007LF 67601157 68645-018 68648-049 70.362.1628.0 70-4210 70-4226B 70-4853B 707-5020 707-5028 71.350.2428.0 71918-208LF 71961-016LF 733-134 733-162 754199-000 760-3052 787-8014-00 79531-3000 FCN-360C032-B FCN-367T-T012/H FCN-723D010/2 80.063.4001.1 800-90-001-10-001000 800-90-010-10-002000 801-43-002-10-013000