THIS DRAWING IS UNPUBLISHED. RELEASED FOR PUBLICATION -,- .
© COPYRIGHT - By - ALL RIGHTS RESERVED.

LOC	DIST
GP	00

REVISIONS

P	LTR	DESCRIPTION	DATE	DWN	APVD
	L2	REVISED PER ECO-11-005033	23MAR11	RK	HMR

1. MOLDED PARTS: POLYESTER, UL RATED 94V-0, BLACK. CONTACTS: BERYLLIUM COPPER.
2. 2.54μm [.000100] MIN TIN-LEAD ON TERMINATION END, 0.76μm [.000030] MIN GOLD ON CONTACT AREA, ALL OVER 1.27μm [.000050] MIN NICKEL.
3. POSITION TOLERANCE APPLIES 0.76 [.030] ABOVE DATUM V.
4. POSITION NUMBER 1 INDICATOR.
5. ELECTRICAL ENGAGEMENT ZONE.
6. RECOMMENDED 28 AWG RIBBON CABLE, 0.61 – 0.97 [.024 – .038] THICK PVC, 1.0000[.03937] PITCH.
7. AMP LOGO ORIENTATION IS OPTIONAL.
8. RECESS ON EACH END, OPPOSITE CORNER.
9. 0.13μm [.000005] MIN GOLD ON TERMINATION END, 0.76μm [.000030] MIN GOLD ON CONTACT AREA, ALL OVER 1.27μm [.000050] MIN NICKEL.
10. MOLD GATE PROJECTION ON EITHER END OF COVER TO BE EXCLUDED FROM DIMENSION 'B' MEASUREMENT.

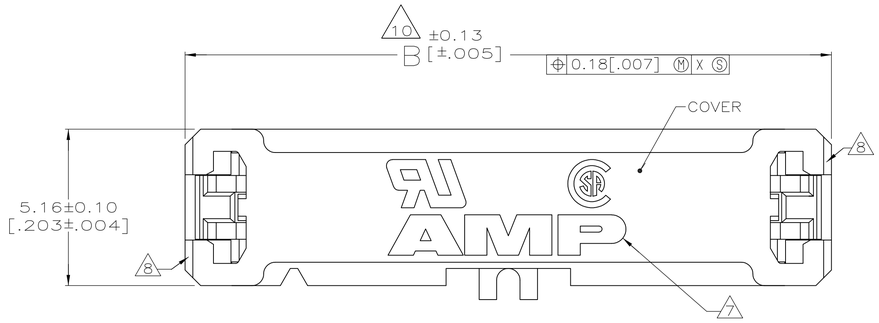

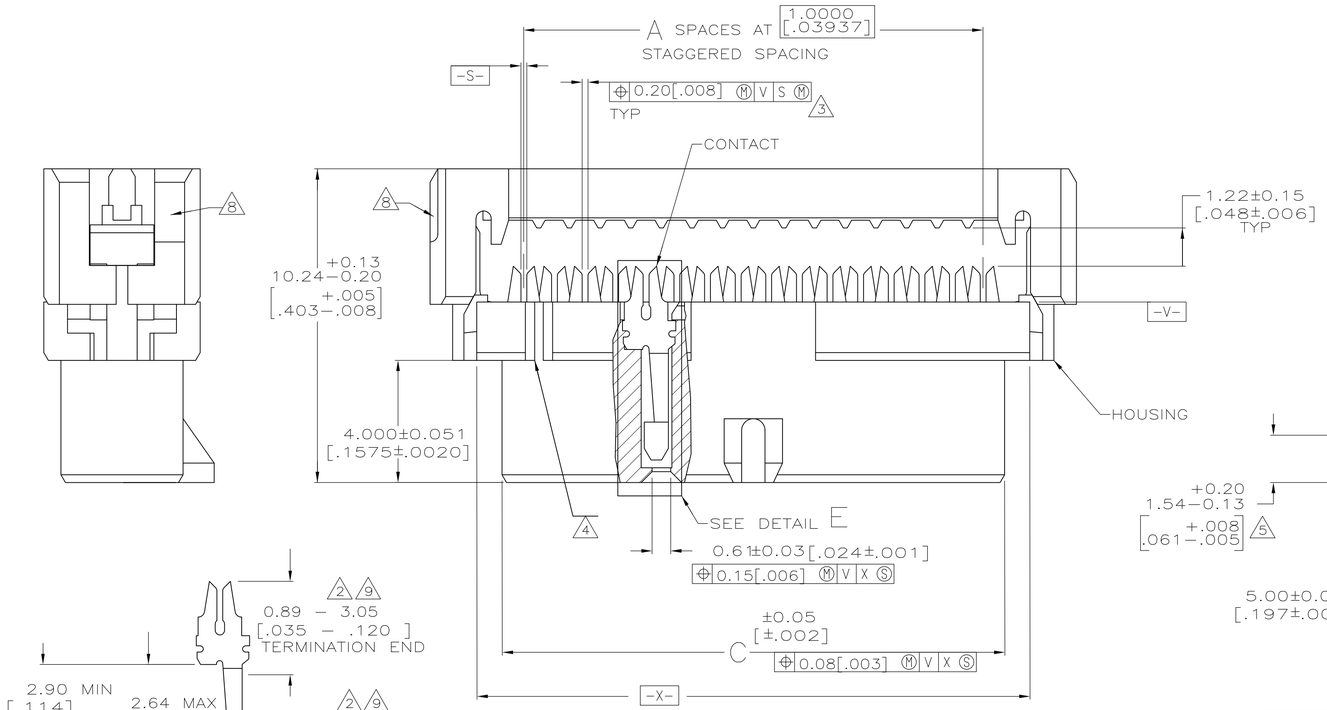

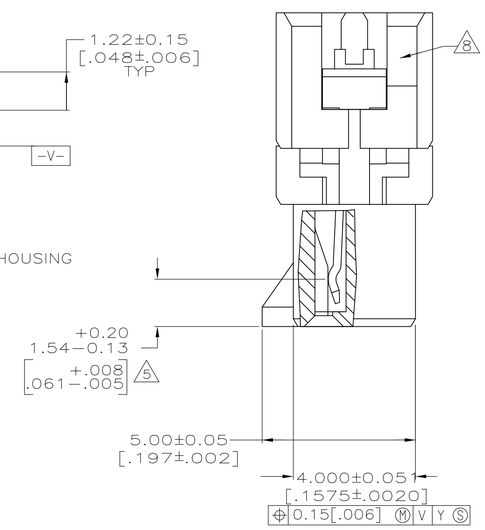

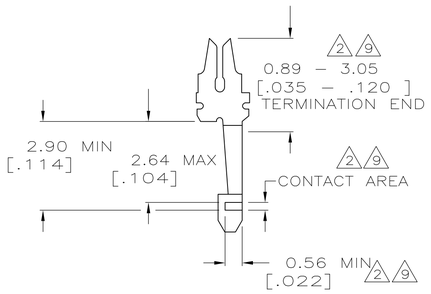

DETAIL E
TYPICAL

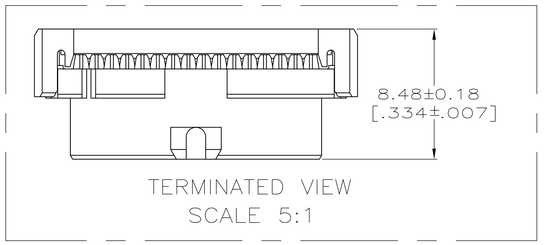

TERMINATED VIEW
SCALE 5:1

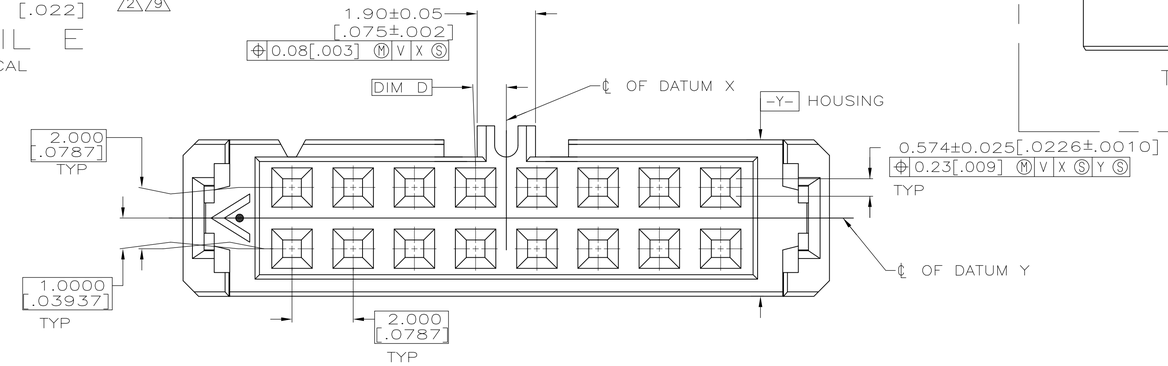

	9	1.0000 [.03937]	12.40 [.488]	17.15 [.675]	11	12	3-111623-1
	9	1.0000 [.03937]	8.41 [.331]	13.18 [.519]	7	8	3-111623-0
	9	0.0000 [.00000]	22.40 [.882]	27.18 [1.070]	21	22	2-111623-9
	9	0.0000 [.00000]	34.42 [1.355]	39.17 [1.542]	33	34	2-111623-8
	9	1.0000 [.03937]	24.41 [.961]	29.18 [1.149]	23	24	2-111623-7
	9	0.0000 [.00000]	50.39 [1.984]	55.17 [2.172]	49	50	2-111623-6
	9	1.0000 [.03937]	44.40 [1.748]	49.17 [1.936]	43	44	2-111623-5
	9	1.0000 [.03937]	40.41 [1.591]	45.19 [1.779]	39	40	2-111623-4
	9	0.0000 [.00000]	30.40 [1.197]	35.18 [1.385]	29	30	2-111623-3
	9	0.0000 [.00000]	26.42 [1.040]	31.17 [1.227]	25	26	2-111623-2
	9	1.0000 [.03937]	20.40 [.803]	25.17 [.991]	19	20	2-111623-1
	9	1.0000 [.03937]	16.41 [.646]	21.18 [.834]	15	16	2-111623-0
	9	0.0000 [.00000]	14.40 [.567]	19.18 [.755]	13	14	1-111623-9
	9	0.0000 [.00000]	10.41 [.410]	15.16 [.597]	9	10	1-111623-8
OBSOLETE	2	1.0000 [.03937]	12.40 [.488]	17.15 [.675]	11	12	1-111623-7
OBSOLETE	2	1.0000 [.03937]	8.41 [.331]	13.18 [.519]	7	8	1-111623-6
	2	0.0000 [.00000]	22.40 [.882]	27.18 [1.070]	21	22	1-111623-5
OBSOLETE	2	1.0000 [.03937]	68.40 [2.693]	73.18 [2.881]	67	68	1-111623-4
OBSOLETE	2	1.0000 [.03937]	64.41 [2.536]	69.16 [2.723]	63	64	1-111623-3
OBSOLETE	2	1.0000 [.03937]	60.40 [2.378]	65.18 [2.566]	59	60	1-111623-2
	2	0.0000 [.00000]	50.39 [1.984]	55.17 [2.172]	49	50	1-111623-1
	2	1.0000 [.03937]	44.40 [1.748]	49.17 [1.936]	43	44	1-111623-0
OBSOLETE	2	1.0000 [.03937]	40.41 [1.591]	45.19 [1.779]	39	40	111623-9
OBSOLETE	2	0.0000 [.00000]	34.42 [1.355]	39.17 [1.542]	33	34	111623-8
OBSOLETE	2	0.0000 [.00000]	30.40 [1.197]	35.18 [1.385]	29	30	111623-7
OBSOLETE	2	0.0000 [.00000]	26.42 [1.040]	31.17 [1.227]	25	26	111623-6
OBSOLETE	2	1.0000 [.03937]	24.41 [.961]	29.18 [1.149]	23	24	111623-5
OBSOLETE	2	1.0000 [.03937]	20.40 [.803]	25.17 [.991]	19	20	111623-4
	2	1.0000 [.03937]	16.41 [.646]	21.18 [.834]	15	16	111623-3
OBSOLETE	2	0.0000 [.00000]	14.40 [.567]	19.18 [.755]	13	14	111623-2
	2	0.0000 [.00000]	10.41 [.410]	15.16 [.597]	9	10	111623-1
CONTACT FINISH	D	C	B	A	NO OF POSN	PART NO

THIS DRAWING IS A CONTROLLED DOCUMENT.

DIMENSIONS: mm [INCHES]

TOLERANCES, UNLESS OTHERWISE SPECIFIED:
0 PLC ± –
1 PLC ± –
2 PLC ± 0.08 [.003]
3 PLC ± –
4 PLC ± –
ANGLES ± –

MATERIAL 1
FINISH CONTACTS: SEE TABLE

DWN C.OBERMAN 02-21-92
CHK J.McCLINTON 3-9-92
APVD –
PRODUCT SPEC 108-1372
APPLICATION SPEC –
WEIGHT –

TE Connectivity

NAME RECEPTACLE ASSY, POLARIZED, 2mm CL, AMP-LATCH

SIZE	CAGE CODE	DRAWING NO	RESTRICTED TO
A1	00779	C-111623	–

CUSTOMER DRAWING SCALE 10:1 SHEET 1 OF 1 REV L2

4805 (3/11)

X-ON Electronics

Largest Supplier of Electrical and Electronic Components

Click to view similar products for Headers & Wire Housings ***category:***

Click to view products by TE Connectivity ***manufacturer:***

Other Similar products are found below :

892-18-020-10-001101 58102-G61-06LF 582553-1 0009485154 009176003701906 0050291907 LY20-4P-DT1-P1E-BR 02.125.8002.8 609-3404 61062-3 61082-181009 622-3653LF 63453-116 636-1030 636-1427 636-3427 636-4007 641938-9 641991-4 644827-2 65817-010LF 65817-015LF 65863-015LF 66207-023LF 67095-007LF 67601157 68645-018 68648-049 70.362.1628.0 70-4210 70-4226B 70-4853B 707-5020 707-5028 71.350.2428.0 71918-208LF 71961-016LF 733-134 733-162 754199-000 760-3052 787-8014-00 79531-3000 FCN-360C032-B FCN-367T-T012/H FCN-723D010/2 80.063.4001.1 800-90-001-10-001000 800-90-010-10-002000 801-43-002-10-013000