THIS DRAWING IS UNPUBLISHED. RELEASED FOR PUBLICATION 2003
© COPYRIGHT 2003 - ALL RIGHTS RESERVED.

LOC	DIST
A1	-

REVISIONS

P	LTR	DESCRIPTION	DATE	DWN	APVD
	D1	REVISED PER ECO-11-005150	11MAY2011	RK	HMR
	D2	REVISED PER ECR-11-014742	18JULY2011	PT	HMR

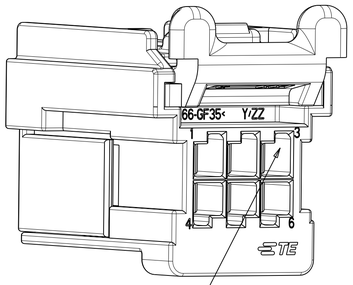

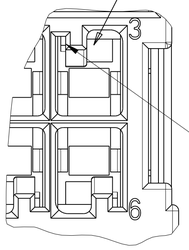

ALTERNATIVE CAVITY DESIGN ALLOWED

10:1

A-A

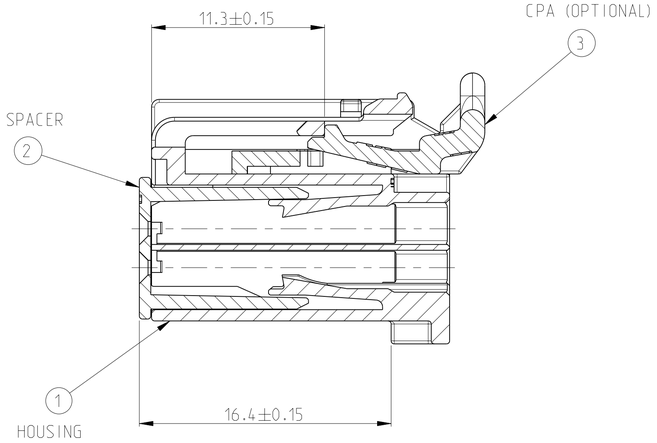

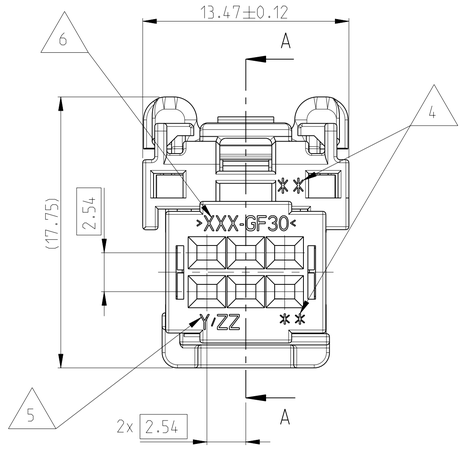

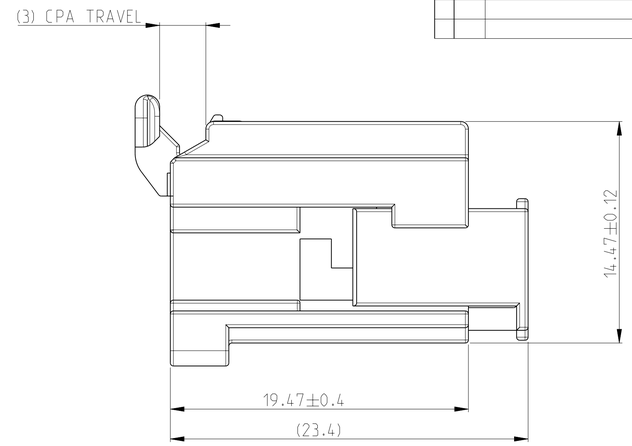

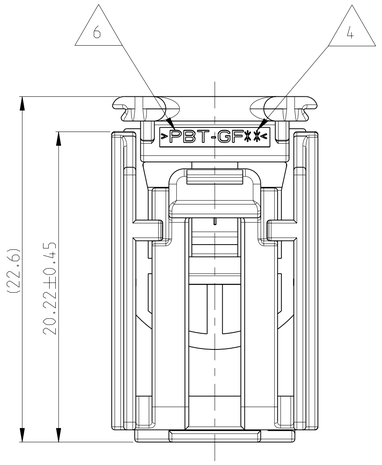

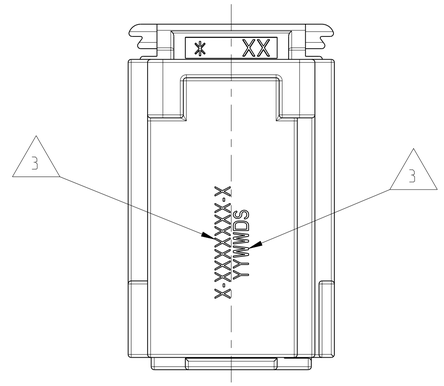

NOTES:

1. MOLD TERMINAL POSITION NUMBERS LOCATED AS SHOWN
2. DELIVERY CONDITION: SPACER AND CPA (OPTIONAL) IN PRE ASSEMBLED POSITION
3. PART NUMBER AND DATE CODE
4. PRODUCT REVISION LEVEL OPTIONAL
5. TOOL NUMBER AND CAVITY NUMBER OPTIONAL
6. MATERIAL IDENTIFICATION
7. TE- LOGO (OPTIONAL) ALTERNATIVE SUPPLIER LOGO POSSIBLE
8. INTERFACE SPEC.: 114-18546
9. KEYING OPTION A SHOWN WITH CPA
10. PACKING:
    CONNECTOR ASSEMBLIES PACKED ON TRAY
    TRAYS PACKED IN CARD BOARD BOX

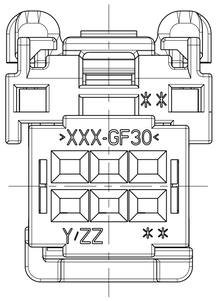

KEYING OPTION A

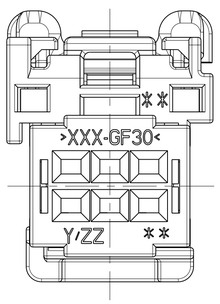

KEYING OPTION B

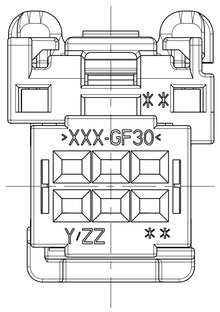

KEYING OPTION C

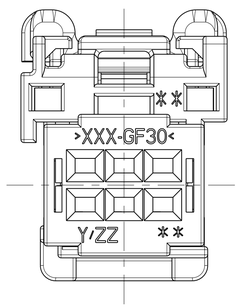

KEYING OPTION D

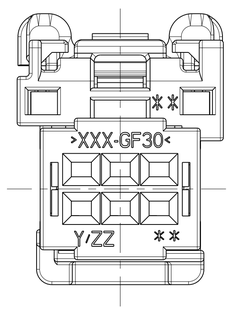

KEYING OPTION E

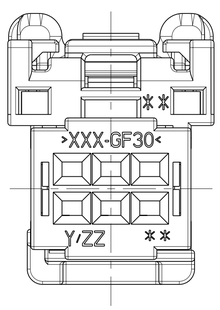

KEYING OPTION F

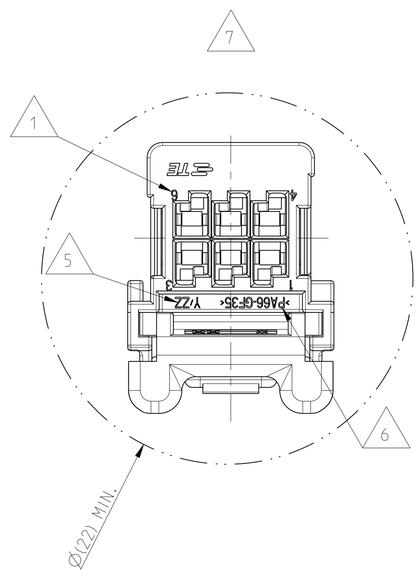

TE-ORDER-NUMBER	KEYING OPTIONS F		E		D			C			B			A						
	TBD	9-1411325-6	TBD	9-1411325-5	1411325-4	1-1411325-4	9-1411325-4	1411325-3	1-1411325-3	9-1411325-3	1419158-6	1-1411325-2	9-1411325-2	1419158-5	1-1411325-1	9-1411325-1				
	1		1		1			1			1			1			CPA	RED	PBT-GF20	3
	1	1	1	1	1	1	1	1	1	1	1	1	1	1	1	1	SPACER	RED	PBT-GF30	2
														1		1	HOUSING COD. A	BLACK	PA66-GF35	1
															1		HOUSING COD. A	GREEN	PA66-GF35	1
											1		1				HOUSING COD. B	BLACK	PA66-GF35	1
												1					HOUSING COD. B	GREY	PA66-GF35	1
								1		1							HOUSING COD. C	BLACK	PA66-GF35	1
									1								HOUSING COD. C	BROWN	PA66-GF35	1
					1		1										HOUSING COD. D	BLACK	PA66-GF35	1
						1											HOUSING COD. D	BLUE	PA66-GF35	1
			1	1													HOUSING COD. E	BLACK	PA66-GF35	1
	1	1															HOUSING COD. F	BLACK	PA66-GF35	1
	QUANTITY																DESCRIPTION	COLOUR	MATERIAL	ITEM

THIS DRAWING IS A CONTROLLED DOCUMENT.

DIMENSIONS: mm

TOLERANCES UNLESS OTHERWISE SPECIFIED:
0 PLC ±
1 PLC ±
2 PLC ±
3 PLC ±
4 PLC ±
ANGLES ±4°

MATERIAL -
FINISH -

DWN	B.Depreytere	15JUL1998
CHK	G.Willems	30JUL1998
APVD	B.Van Sebroeck	15JAN2001
PRODUCT SPEC	-	
APPLICATION SPEC	-	
WEIGHT	-	

TE Connectivity

NAME 2X3 POS. GET FEMALE CONNECTOR ASSEMBLY
-

SIZE	CAGE CODE	DRAWING NO	RESTRICTED TO
A1	00779	C-1411325-3	-

CUSTOMER DRAWING | SCALE 5:1 | SHEET 1 OF 1 | REV D2

4805 (3/11)

Pro/ENGINEER DRAWING

X-ON Electronics

Largest Supplier of Electrical and Electronic Components

Click to view similar products for Automotive Connectors ***category:***

Click to view products by TE Connectivity ***manufacturer:***

Other Similar products are found below :

003-018-000 60403001 60993906-B M902-2131 M902-2161 72.330.1035.1 73.353.4028.0 F119300-B F166900 F258300-B F358300-B F407400 F444110 F487000 F509500B-B 827153-1 8N1515-32-24P 9-1326729-8 925474-1 928905-1 964562-4 968782-1 GT17SA-8DS-HU 98891-1012 98947-1016 12004147 12004475-L 12010290 12010309-B 12015454 12020219-B 12020308 12041318-B 12052225-L 12052466 12059125 12064869 12004327-B 12010503-B 12015308 12015384 12015909 1-21030-1 12041254 12041318 12047946-B 12047957 12047957-L 12059473 12066261