THIS DRAWING IS UNPUBLISHED. RELEASED FOR PUBLICATION - ,- .
© COPYRIGHT - By - ALL RIGHTS RESERVED.

LOC	DIST
GP	00

REVISIONS

P	LTR	DESCRIPTION	DATE	DWN	APVD
	G	REVISED PER ECO-13-005383	22MAY2013	CJV	CWR

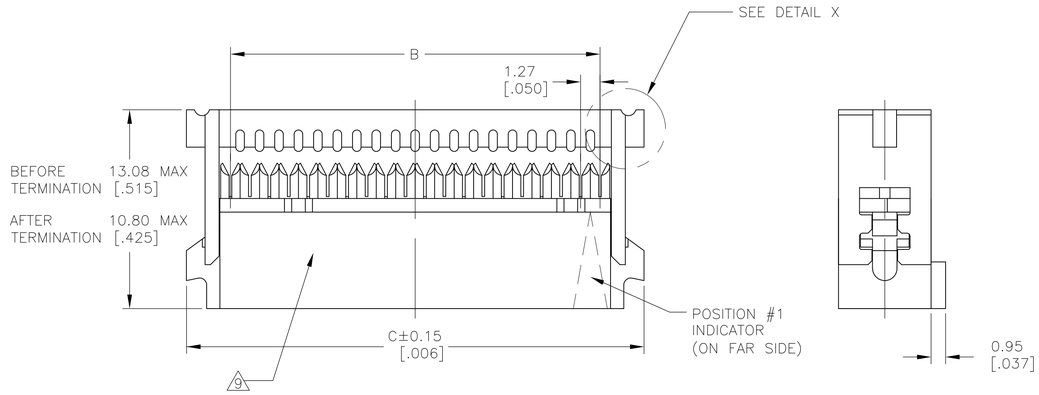

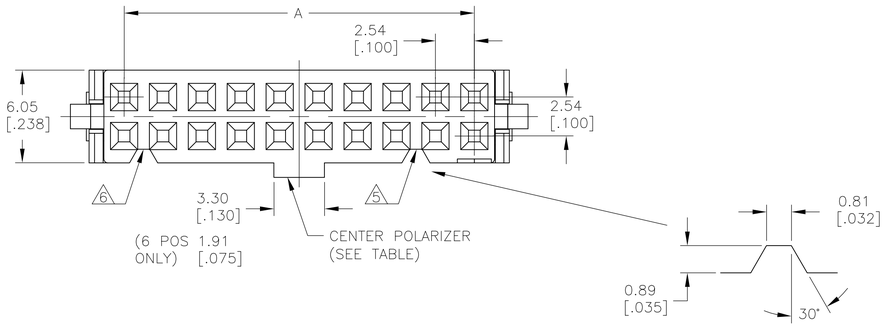

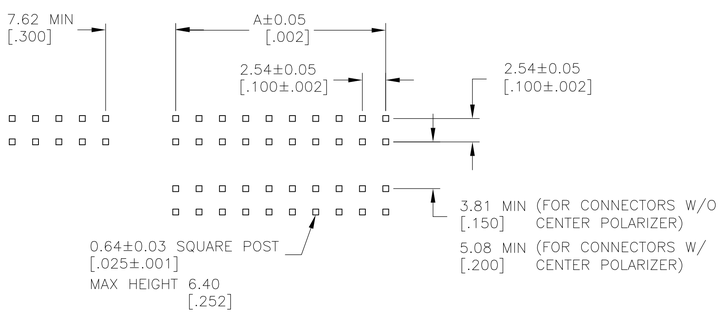

POST LAYOUT

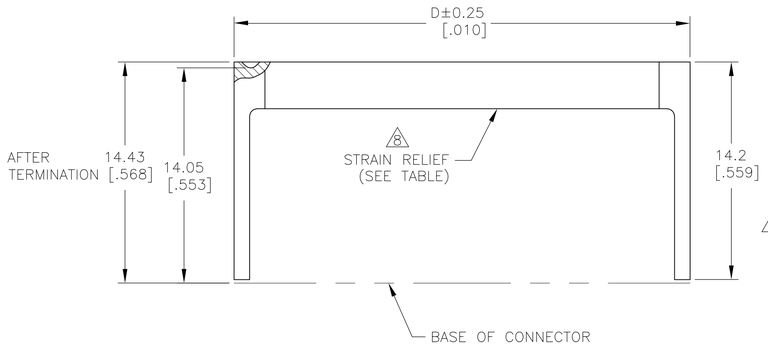

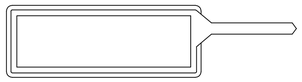

POLARIZING KEY
TE CONNECTIVITY PART NUMBER: 1-1437023-2
T&B PART NUMBER (REF): 609-0000
PURCHASE SEPARATELY

DETAIL X
SCALE 5:1

1. 20 POSITION CONNECTOR ASSEMBLY SHOWN.
2. MOLDED PARTS: THERMOPLASTIC, UL94V-0 RATED, COLOR BLUE. CONTACTS: BERYLLIUM COPPER.
3. CONTACTS: 0.00076[.000030] MIN GOLD ON MATING AREA, 0.00254-0.00508[.000100-.000200] TIN ON TERMINATION END, ALL OVER 0.00127[.000050] MIN NICKEL ON ENTIRE CONTACT.
4. CONTACTS: 0.00127[.000050] MIN GOLD ON MATING AREA, 0.00254-0.00508[.000100-.000200] TIN ON TERMINATION END, ALL OVER 0.00127[.000050] MIN NICKEL ON ENTIRE CONTACT.
5. POLARIZER FEATURE DOES NOT EXIST ON POSITION #1 END FOR 14 POSITION AND SMALLER ASSEMBLIES.
6. POLARIZER FEATURE DOES NOT EXIST ON THIS END FOR 6 POSITION ASSEMBLY.
7. FOR TERMINATION OF 28 OR 30 AWG STRANDED PVC INSULATED FLAT RIBBON CABLE.
8. STRAIN RELIEF PACKAGED SEPARATELY AND SHIPPED WITH ASSEMBLY.
9. DATE CODE STAMPED ON THIS SIDE OF CONNECTOR. 6 POSITION CONNECTORS EXCLUDED.
10. ALTERNATE COVER END APPLES TO INDICATED NUMBERS.

	STRAIN RELIEF	CENTER POLARIZER	CONTACT FINISH	D	C	B	A	NUMBER OF POSITIONS	T&B PART NUMBER (REFERENCE)	PART NUMBER
OBSOLETE	YES	YES	3	85.65[3.372]	85.75[3.376]	80.01[3.150]	78.74[3.100]	64	609-6441LF	4-1658526-5
OBSOLETE	NO	YES	3	–	85.75[3.376]	80.01[3.150]	78.74[3.100]	64	609-6430LF	4-1658526-4
	YES	YES	3	67.87[2.672]	67.97[2.676]	62.23[2.450]	60.96[2.400]	50	609-5041LF	2-1658526-4
	NO	YES	3	–	67.97[2.676]	62.23[2.450]	60.96[2.400]	50	609-5030LF	2-1658526-3
	YES	NO	3	67.87[2.672]	67.97[2.676]	62.23[2.450]	60.96[2.400]	50	609-5001MLF	2-1658526-2
	NO	NO	3	–	67.97[2.676]	62.23[2.450]	60.96[2.400]	50	609-5000MLF	4-1658526-3
	YES	YES	3	55.17[2.172]	55.27[2.176]	49.53[1.950]	48.26[1.900]	40	609-4041LF	2-1658526-1
	NO	YES	3	–	55.27[2.176]	49.53[1.950]	48.26[1.900]	40	609-4030LF	2-1658526-0
OBSOLETE	YES	NO	3	55.17[2.172]	55.27[2.176]	49.53[1.950]	48.26[1.900]	40	609-4001MLF	4-1658526-2
	NO	NO	3	–	55.27[2.176]	49.53[1.950]	48.26[1.900]	40	609-4000MLF	4-1658526-1
10	YES	YES	3	50.09[1.972]	50.19[1.976]	44.45[1.750]	43.18[1.700]	36	609-3641LF	4-1658526-0
10	NO	YES	3	–	50.19[1.976]	44.45[1.750]	43.18[1.700]	36	609-3630LF	3-1658526-8
	YES	YES	3	47.55[1.872]	47.65[1.876]	41.91[1.650]	40.64[1.600]	34	609-3441LF	1-1658526-9
	NO	YES	3	–	47.65[1.876]	41.91[1.650]	40.64[1.600]	34	609-3430LF	1-1658526-8
OBSOLETE	YES	NO	3	47.55[1.872]	47.65[1.876]	41.91[1.650]	40.64[1.600]	34	609-3401MLF	3-1658526-7
OBSOLETE	NO	NO	3	–	47.65[1.876]	41.91[1.650]	40.64[1.600]	34	609-3400MLF	1-1658526-7
	YES	YES	3	37.39[1.472]	37.49[1.476]	31.75[1.250]	30.48[1.200]	26	609-2641LF	1-1658526-6
	NO	YES	3	–	37.49[1.476]	31.75[1.250]	30.48[1.200]	26	609-2630LF	1-1658526-5
OBSOLETE	YES	NO	3	37.39[1.472]	37.49[1.476]	31.75[1.250]	30.48[1.200]	26	609-2601MLF	3-1658526-6
	NO	NO	3	–	37.49[1.476]	31.75[1.250]	30.48[1.200]	26	609-2600MLF	3-1658526-5
OBSOLETE	YES	YES	3	34.85[1.372]	34.95[1.376]	29.21[1.150]	27.94[1.100]	24	609-2441LF	3-1658526-4
OBSOLETE	NO	YES	3	–	34.95[1.376]	29.21[1.150]	27.94[1.100]	24	609-2430LF	1-1658526-4
OBSOLETE	NO	NO	3	–	34.95[1.376]	29.21[1.150]	27.94[1.100]	24	609-2400MLF	3-1658526-3
	YES	YES	3	29.77[1.172]	29.87[1.176]	24.13[.950]	22.86[.900]	20	609-2041LF	1-1658526-3
	NO	YES	3	–	29.87[1.176]	24.13[.950]	22.86[.900]	20	609-2030LF	1-1658526-2
OBSOLETE	YES	NO	3	29.77[1.172]	29.87[1.176]	24.13[.950]	22.86[.900]	20	609-2001MLF	3-1658526-2
	NO	NO	3	–	29.87[1.176]	24.13[.950]	22.86[.900]	20	609-2000MLF	3-1658526-0
	NO	NO	4	–	29.87[1.176]	24.13[.950]	22.86[.900]	20	609-2000MP005LF	3-1658526-1
	YES	YES	3	24.69[.972]	24.79[.976]	19.05[.750]	17.78[.700]	16	609-1641LF	1-1658526-1
	NO	YES	3	–	24.79[.976]	19.05[.750]	17.78[.700]	16	609-1630LF	2-1658526-9
	YES	NO	3	24.69[.972]	24.79[.976]	19.05[.750]	17.78[.700]	16	609-1601MLF	1-1658526-0
OBSOLETE	NO	NO	3	–	24.79[.976]	19.05[.750]	17.78[.700]	16	609-1600MLF	2-1658526-8
	YES	YES	3	22.15[.872]	22.25[.876]	16.51[.650]	15.24[.600]	14	609-1441LF	1658526-9
	NO	YES	3	–	22.25[.876]	16.51[.650]	15.24[.600]	14	609-1430LF	1658526-8
OBSOLETE	YES	NO	3	22.15[.872]	22.25[.876]	16.51[.650]	15.24[.600]	14	609-1401MLF	1658526-7
OBSOLETE	NO	NO	3	–	22.25[.876]	16.51[.650]	15.24[.600]	14	609-1400MLF	1658526-6
	YES	YES	3	17.07[.672]	17.17[.676]	11.43[.450]	10.16[.400]	10	609-1041LF	1658526-5
	NO	YES	3	–	17.17[.676]	11.43[.450]	10.16[.400]	10	609-1030LF	1658526-4
OBSOLETE	YES	NO	3	17.07[.672]	17.17[.676]	11.43[.450]	10.16[.400]	10	609-1001MLF	2-1658526-7
	NO	NO	3	–	17.17[.676]	11.43[.450]	10.16[.400]	10	609-1000MLF	1658526-3
10	YES	YES	3	11.99[.472]	12.09[.476]	6.35[.250]	5.08[.200]	6	609-0641LF	1658526-2
10	NO	YES	3	–	12.09[.476]	6.35[.250]	5.08[.200]	6	609-0630LF	1658526-1
10 OBSOLETE	YES	NO	3	11.99[.472]	12.09[.476]	6.35[.250]	5.08[.200]	6	609-0601MLF	2-1658526-6
10	NO	NO	3	–	12.09[.476]	6.35[.250]	5.08[.200]	6	609-0600MLF	2-1658526-5

ELECTRICAL PROPERTIES	
CURRENT RATING	1 AMP
INSULATION RESISTANCE	>1 x 10^9 OHMS @ 500 VDC
DWV	>500 VRMS AT SEA LEVEL
ENVIRONMENTAL PROPERTIES	
TEMPERATURE RATING	-55°C TO 125°C

THIS DRAWING IS A CONTROLLED DOCUMENT.
DIMENSIONING AND TOLERANCING PER ASME Y14.5M-2009

DIMENSIONS: mm[INCHES]

TOLERANCES UNLESS OTHERWISE SPECIFIED:
0 PLC ± -
1 PLC ± -
2 PLC ± -
3 PLC ± 0.13[.005]
4 PLC ± -
ANGLES ± 4°

MATERIAL 2
FINISH SEE TABLE

DWN J.GERACE 30SEP03
CHK C.ROHDE 30SEP03
APVD M.WALMSLEY 30SEP03
PRODUCT SPEC —
APPLICATION SPEC —
WEIGHT —

TE Connectivity

NAME CONNECTOR ASSEMBLY, FEMALE SOCKET TRANSITION

SIZE A1 | CAGE CODE 00779 | DRAWING NO C-1658526 | RESTRICTED TO —

CUSTOMER DRAWING | SCALE 10:1 | SHEET 1 OF 1 | REV G

4805 (3/11)

X-ON Electronics

Largest Supplier of Electrical and Electronic Components

Click to view similar products for Headers & Wire Housings ***category:***

Click to view products by TE Connectivity ***manufacturer:***

Other Similar products are found below :

892-18-020-10-001101 58102-G61-06LF 582553-1 0009485154 009176003701906 0050291907 LY20-4P-DT1-P1E-BR 02.125.8002.8 609-3404 61062-3 61082-181009 622-3653LF 63453-116 636-1030 636-1427 636-3427 636-4007 641938-9 641991-4 644827-2 65817-010LF 65817-015LF 65863-015LF 66207-023LF 67095-007LF 67601157 68645-018 68648-049 70.362.1628.0 70-4210 70-4226B 70-4853B 707-5020 707-5028 71.350.2428.0 71918-208LF 71961-016LF 733-134 733-162 754199-000 760-3052 787-8014-00 79531-3000 FCN-360C032-B FCN-367T-T012/H FCN-723D010/2 80.063.4001.1 800-90-001-10-001000 800-90-010-10-002000 801-43-002-10-013000