NUMBER 179552

(3rd ANGLE PROJECTION)

METRIC

DIMENSIONS IN MM. DO NOT SCALE PRINT

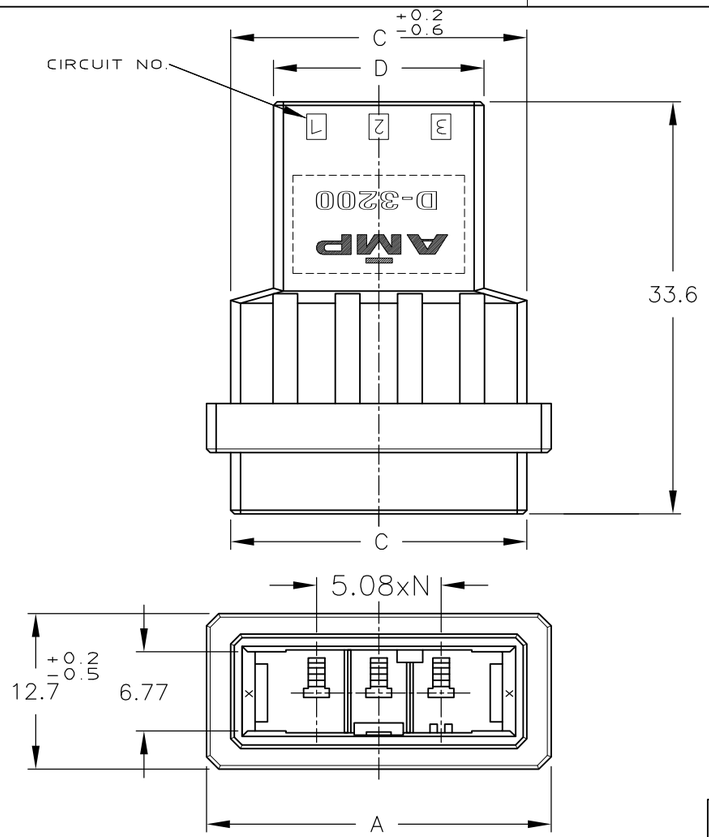

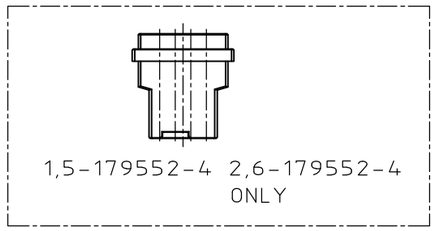

NOTES

1 MATERIAL:GLASS FIELD THERMO PLASTIC,POLYESTER
COLOR;BLACK

~~2 TO COAT ALL SURFACE OF HOUSING WITH TEFLON~~

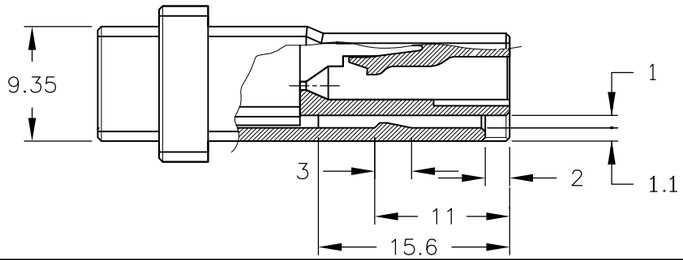

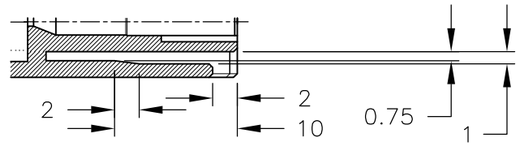

1,5-179552-2 , 2,6-179552-2 ONLY

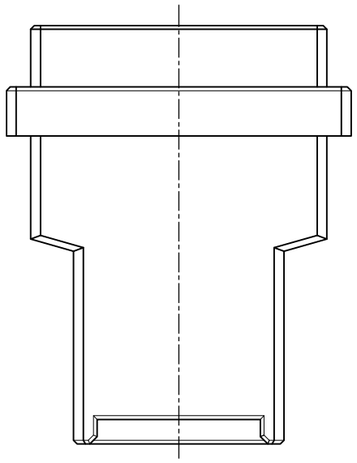

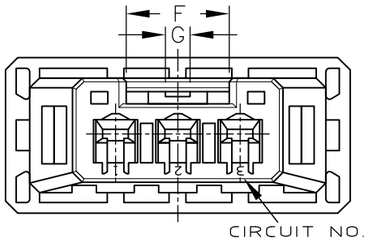

OBSOLETE	~~2~~		~~4~~	~~33.19~~		~~29.24~~	~~22.24~~		~~8.4~~	~~2~~	~~3~~	~~Y~~	~~6-179552-4~~
OBSOLETE	~~2~~		~~4~~	~~33.19~~		~~29.24~~	~~22.24~~		~~8.4~~	~~2~~	~~3~~	~~X~~	~~5-179552-4~~
	—		4	33.19		29.24	22.24		8.4	2	3	Y	2-179552-4
	—		4	33.19		29.24	22.24		8.4	2	3	X	1-179552-4
OBSOLETE	~~2~~		~~3~~	~~28.11~~		~~24.16~~	~~17.16~~		~~8.4~~	~~2~~	~~2~~	~~Y~~	~~6-179552-3~~
OBSOLETE	~~2~~		~~3~~	~~28.11~~		~~24.16~~	~~17.16~~		~~8.4~~	~~2~~	~~2~~	~~X~~	~~5-179552-3~~
	—		3	28.11		24.16	17.16		8.4	2	2	Y	2-179552-3
	—		3	28.11		24.16	17.16		8.4	2	2	X	1-179552-3
OBSOLETE	~~2~~		~~2~~	~~23.03~~		~~19.08~~	~~12.08~~		~~8.4~~	~~2~~	~~1~~	~~Y~~	~~6-179552-2~~
OBSOLETE	~~2~~		~~2~~	~~23.03~~		~~19.08~~	~~12.08~~		~~8.4~~	~~2~~	~~1~~	~~X~~	~~5-179552-2~~
	—		2	23.03		19.08	12.08		8.4	2	1	Y	2-179552-2
	—		2	23.03		19.08	12.08		8.4	2	1	X	1-179552-2
FINISH		KEYING PATTERN	POS. / DIMENSION	A	—	C	D	—	F	G	N	KEY	PART NUMBER

LTR	(REVISION RECORD)	DR	CHK	DATE
F	REVISED PER ECR-11-012413	T.T	T.M	17JUN 11

(WIRE RANGE) — mm² (AWG —)

(INSULATION DIA.) — mmØ

(MATERIAL) SEE NOTES

(FINISH)

DR. 31 JAN 94 N.Matsubara

DE. 31 JAN 94 N.Matsubara

CHK. 1 FEB 94 S.MANABE

APP. 1 FEB 94 S.MANABE

TE Connectivity

(NAME)

D3200S
WIRE TO WIRE TAB HSG FOR DYNAMIC
D-3200S FREE HANGING TYPE

(GENERAL TOLERANCE)
≤10 : ±0.2
10 ≤30 : ±0.25
30 ≤100 : ±0.3
ANGLE : ±3°

SIZE A3 | LOC J | (No.) C-179552

(SCALE) 2/1 | REV. F | SHEET 1 OF 1

PRINT DIST

AMP-J
REV.10/'83

X-ON Electronics

Largest Supplier of Electrical and Electronic Components

Click to view similar products for Headers & Wire Housings ***category:***

Click to view products by TE Connectivity ***manufacturer:***

Other Similar products are found below :

892-18-020-10-001101 58102-G61-06LF 582553-1 0009485154 009176003701906 0050291907 LY20-4P-DT1-P1E-BR 02.125.8002.8 609-3404 61062-3 61082-181009 622-3653LF 63453-116 636-1030 636-1427 636-3427 636-4007 641938-9 641991-4 644827-2 65817-010LF 65817-015LF 65863-015LF 66207-023LF 67095-007LF 67601157 68645-018 68648-049 70.362.1628.0 70-4210 70-4226B 70-4853B 707-5020 707-5028 71.350.2428.0 71918-208LF 71961-016LF 733-134 733-162 754199-000 760-3052 787-8014-00 79531-3000 FCN-360C032-B FCN-367T-T012/H FCN-723D010/2 80.063.4001.1 800-90-001-10-001000 800-90-010-10-002000 801-43-002-10-013000