THIS DRAWING IS UNPUBLISHED. RELEASED FOR PUBLICATION -,- .
© COPYRIGHT 2011APR By - Tyco Electronics Japan G.K. ALL RIGHTS RESERVED.

LOC	DIST
J	-

REVISIONS

P	LTR	DESCRIPTION	DATE	DWN	APVD
	C	REVISED	25APR11	MM	NY

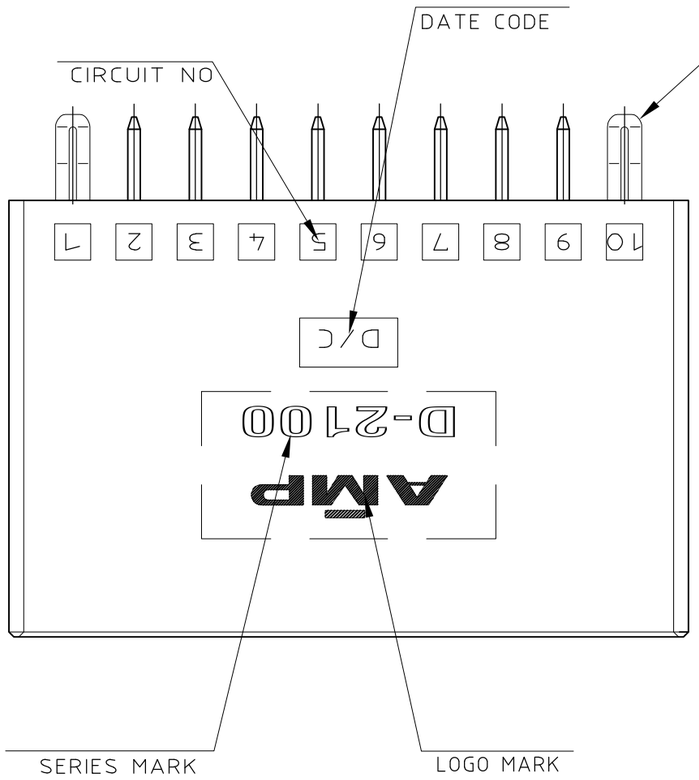

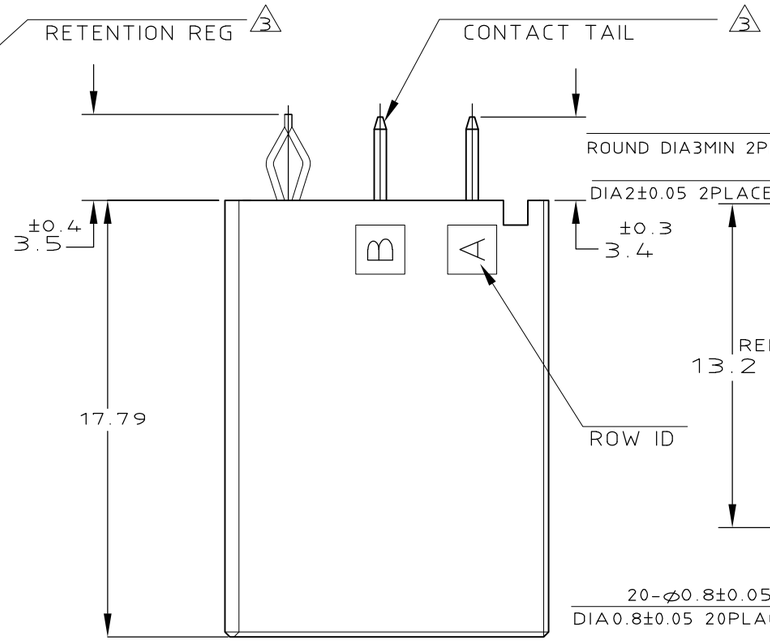

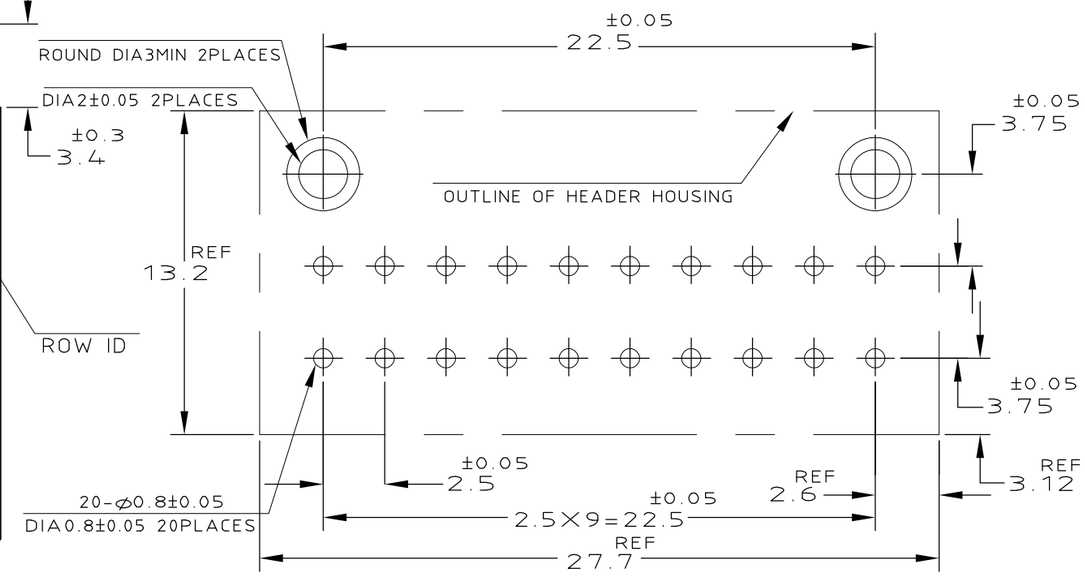

RECOMENDED PC BOARD HOLE PATTERN(TOL:±0.05)
PC BOARD THICKNESS:1.6±0.3
(CONNECTOR MOUNT SIDE)

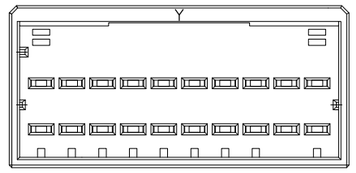

1318127-2
9-1318127-2
(KEYING Y)
SCALE:2-1

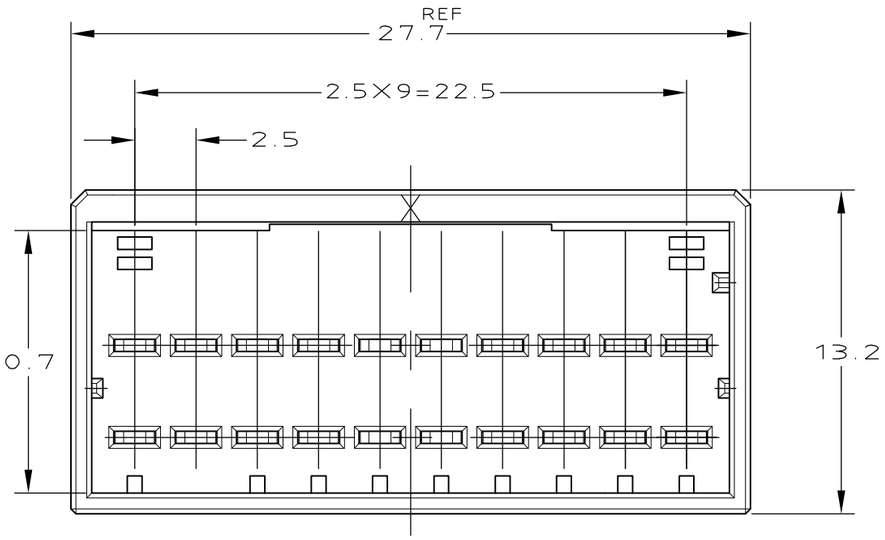

1318127-1
(KEYING X)

NOTES

1. MATERIAL:HOUSING:GLASS FILED THERMO PLASTIC
,POLYESTER(94V-0),
COLOR:1318127-1/-2 : BLACK
9-1318127-2 : NATURAL
TAB CONTACT:COPPER ALLOY
RETENTION LEG:BRASS

2. FINISH(CONTACT AREA):0.38μmMIN GOLD PLATING
OVER Ni PLATING

3. FINISH(RETENTION LEG): TIN PLATED
(CONTACT TAIL) OVER NICKEL

Y	NATURAL	9-1318127-2
Y	BLACK	1318127-2
X	BLACK	1318127-1
KEY	COLOR	PART NO

THIS DRAWING IS A CONTROLLED DOCUMENT.

DIMENSIONS: mm

TOLERANCES UNLESS OTHERWISE SPECIFIED:

0 PLC	± -
1 PLC	± 0.3
2 PLC	± 0.35
3 PLC	± 0.4
4 PLC	± -
ANGLES	± 3°

MATERIAL: SEE NOTES

FINISH: SEE NOTES

DWN K.IKEDA 07DEC98
CHK N.MATSUBARA 07DEC98
APVD I.HASEGAWA 07DEC98
PRODUCT SPEC 108-5619
APPLICATION SPEC 114-5218
WEIGHT -

TE Connectivity

NAME
DOUBLE ROW HEADER ASS'Y 20P ("V" TYPE)
<DYNAMIC D-2100D>

SIZE	CAGE CODE	DRAWING NO	RESTRICTED TO
A3	00779	C-1318127	—

CUSTOMER DRAWING | SCALE 1:1 | SHEET 1 OF 1 | REV C

X-ON Electronics

Largest Supplier of Electrical and Electronic Components

Click to view similar products for Headers & Wire Housings ***category:***

Click to view products by TE Connectivity ***manufacturer:***

Other Similar products are found below :

892-18-020-10-001101 58102-G61-06LF 582553-1 0009485154 009176003701906 0050291907 LY20-4P-DT1-P1E-BR 02.125.8002.8 609-3404 61062-3 61082-181009 622-3653LF 63453-116 636-1030 636-1427 636-3427 636-4007 641938-9 641991-4 644827-2 65817-010LF 65817-015LF 65863-015LF 66207-023LF 67095-007LF 67601157 68645-018 68648-049 70.362.1628.0 70-4210 70-4226B 70-4853B 707-5020 707-5028 71.350.2428.0 71918-208LF 71961-016LF 733-134 733-162 754199-000 760-3052 787-8014-00 79531-3000 FCN-360C032-B FCN-367T-T012/H FCN-723D010/2 80.063.4001.1 800-90-001-10-001000 800-90-010-10-002000 801-43-002-10-013000