~~THIS DRAWING IS UNPUBLISHED.~~ RELEASED FOR PUBLICATION ,1996.
© COPYRIGHT 1996 BY AMP INCORPORATED.ALL RIGHTS RESERVED.

LOC	DIST
J	–

REVISIONS 変更

P	LTR	DESCRIPTION	ECN	DATE	DWN	APVD
	0	DRAWN	FJ00-1684-99	30SEP99	YF	KO

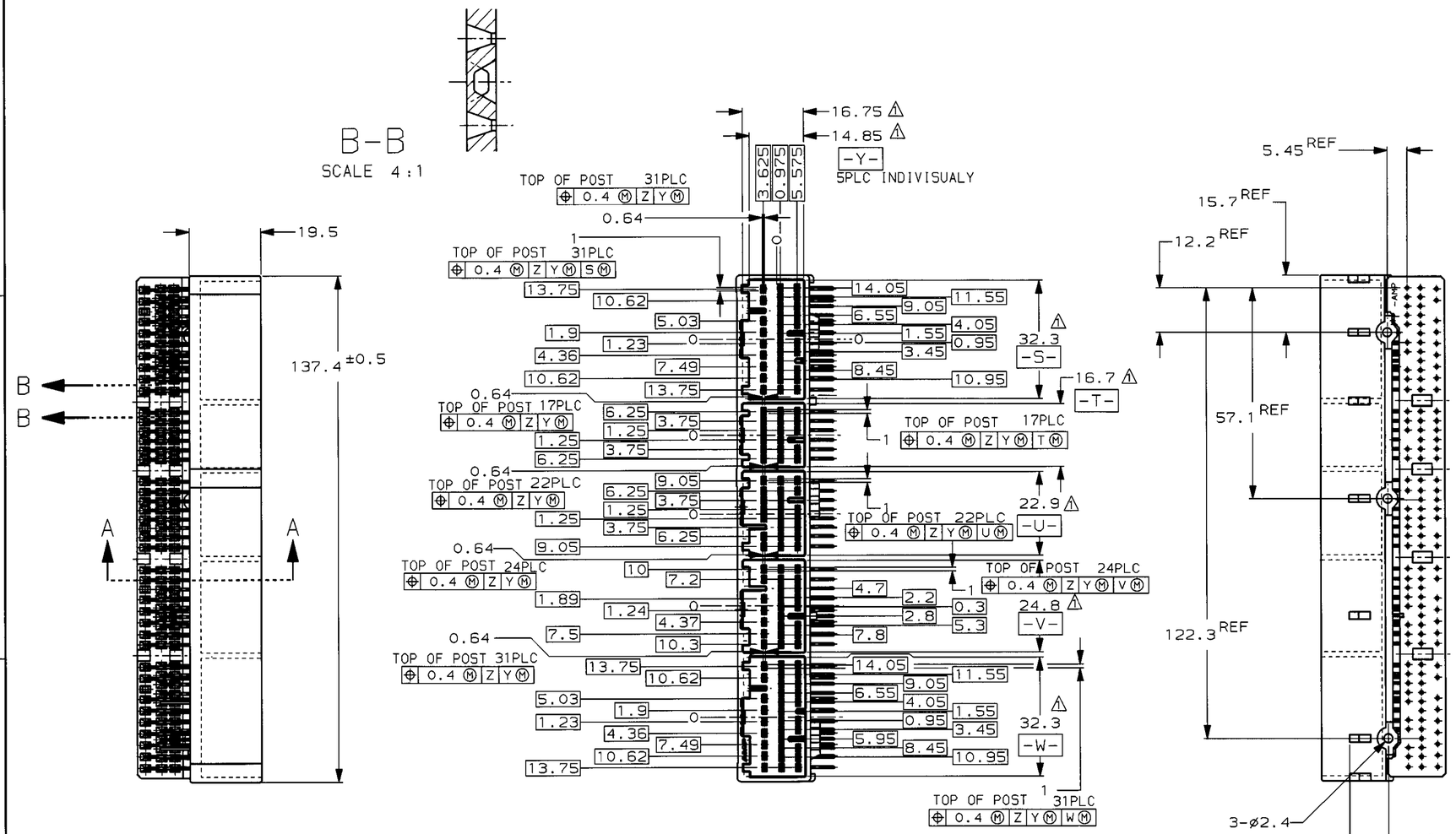

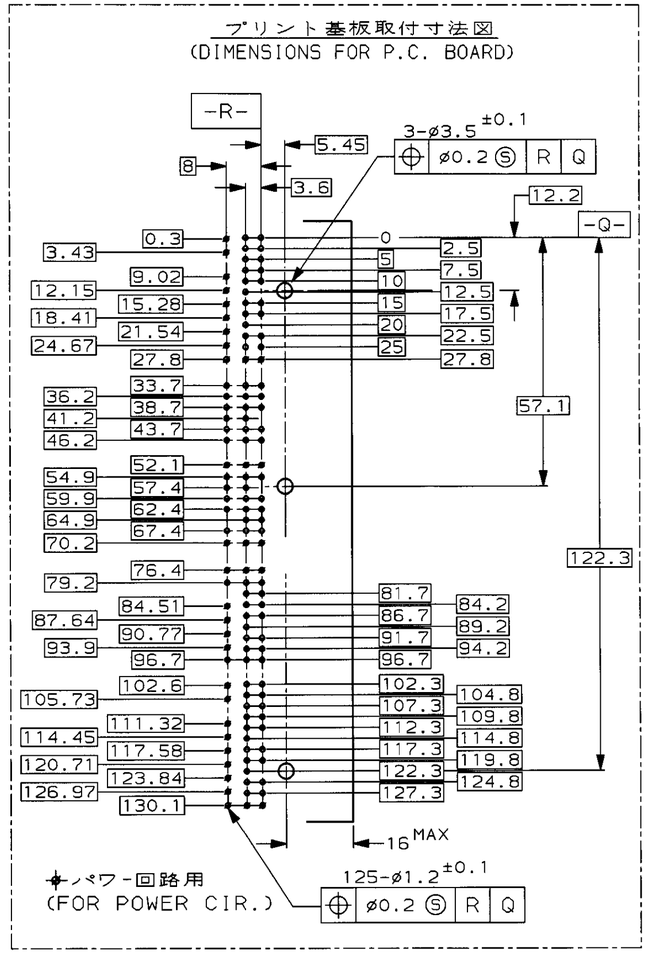

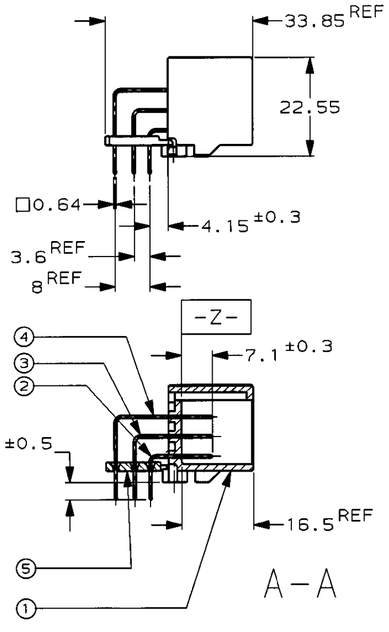

1. 乙面より7.5mmの位置で測定
2. パワー回路(35極);FIG 1 参照
3. 回路番号;FIG 1 参照
4. 嵌合相手ハウジング型番
   17P; 353027 ,22P; 353028
   24P; 353029, 31P; 1318682 ,353826
5. 推奨取付ねじ:JIS B1115、B1122
   タッピングねじ、なべ2種、呼び径3、
   長さ6以下
6. ねじ締付トルク:0.392N・m MAX
7. 取扱説明書 411-5931

1. MEASURED AT THE SECTION 7.5mm FROM Z.
2. POWER CIRCUITS (35) ; SEE FIG 1
3. CIRCUIT NUMBERS ; SEE FIG 1
4. PART NO OF PLUG HOUSINGS TO BE MATED
   17P; 353027 ,22P; 353028 ,24P; 353029
   31P; 1318682 ,353826
5. RECOMMENDED SCREW: PAN-HEADED, TYPE 2
   TAPPING SCREW OF 3DIA X 6LEN(MAX)
   (JIS B1115, B1122).
6. FASTENING TORQUE FOR SCREW: 0.392N・m MAX.
7. INSTRUCTION SHEET 411-5931

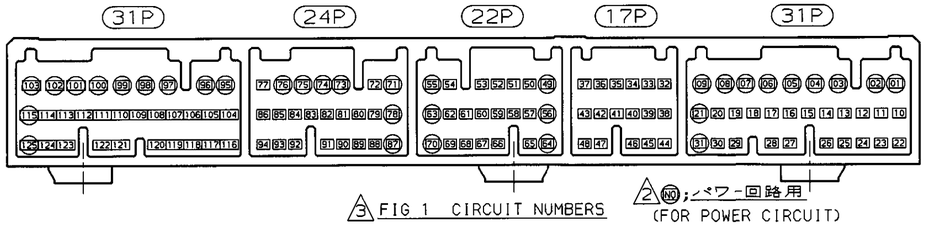

3 FIG 1 CIRCUIT NUMBERS

2 NO;パワー回路用
(FOR POWER CIRCUIT)

FINISH/COLOR	MATERIAL	NAME	QTY	ITEM NO
NATURAL	PBT	TINE PLATE	1	⑤
PRE-TIN	COPPER ALLOY	TAB CONTACT(L)	38	④
PRE-TIN	COPPER ALLOY	TAB CONTACT(M)	47	③
PRE-TIN	COPPER ALLOY	TAB CONTACT(S)	40	②
NATURAL	PBT	CAP HOUSING	1	①

THIS DRAWING IS A CONTROLLED DOCUMENT FOR AMP INCORPORATED. IT IS SUBJECT TO CHANGE AND THE CONTROLLING ENGINEERING ORGANIZATION SHOULD BE CONTACTED FOR THE LATEST REVISION.

DIMENSIONS: 単位 mm

TOLERANCES UNLESS OTHERWISE SPECIFIED
一般公差
10 : ±0.2
30 >10 : ±0.25
100 >30 : ±0.3
ANGLE : ±3°

MATERIAL 材料: SEE TABLE
FINISH 仕上: SEE TABLE

DWN Y.FUJIWALA 29SEP99
CHK K.ODA 30SEP99
APVD K.ODA 30SEP99
PRODUCT SPEC 製品規格 108-5673
APPLICATION SPEC 取付適用規格
WEIGHT 42.2g
CUSTOMER DRAWING

AMP 日本エー・エム・ピー株式会社 Kawasaki, Japan

NAME 名称: 040 Ⅲ HIGH DENSITY CONNECTOR 125POS CAP HOUSING ASSY

SIZE A2 | CAGE CODE 00779 | DRAWING NO 番号 C-1318612 | RESTRICTED TO -
SCALE 尺度 1-1 | SHEET 1 OF 1 | REV 0

AMP 1471-9 REV 10/93

参考図面

/kec/automotive/u.c98-0183/u.customer/s.c-1318612

X-ON Electronics

Largest Supplier of Electrical and Electronic Components

Click to view similar products for Automotive Connectors ***category:***

Click to view products by TE Connectivity ***manufacturer:***

Other Similar products are found below :

003-018-000 60403001 60993906-B M902-2131 M902-2161 M902-2344 72.330.1035.1 73.353.4028.0 F119300-B F166900 F258300-B F358300-B F407400 F444110 F487000 F509500B-B 827153-1 8N1515-32-24P 9-1326729-8 925474-1 928905-1 964562-4 968782-1 GT17SA-8DS-HU 98891-1012 98947-1016 12004147 12004475-L 12010290 12010309-B 12015454 12020219-B 12041318-B 12052225-L 12052466 12064869 12004327-B 12015308 12015384 12015909 1-21030-1 12041254 12041318 12047946-B 12047957 12047957-L 12059473 12066261 12110546 12110546-B