THIS DRAWING IS UNPUBLISHED. RELEASED FOR PUBLICATION 20
© COPYRIGHT 20 BY - ALL RIGHTS RESERVED.

REVISIONS					
P	LTR	DESCRIPTION	DATE	DWN	APVD
	A	REVISED PER ECO-06-010592	08MAY2006	KF	GM
	B	REVISED PER ECO-14-007035	12MAY2014	DLD	DCM

DRAFT PER SIDE (REFERENCE)	A	B	C	D
0°30′	18.30±0.10	18.60±0.10	15.30±0.10	15.60±0.10
1°0′	$18.05^{+0.15}_{-0.05}$	$18.65^{+0.05}_{-0.15}$	$15.05^{+0.15}_{-0.05}$	$15.65^{+0.05}_{-0.15}$

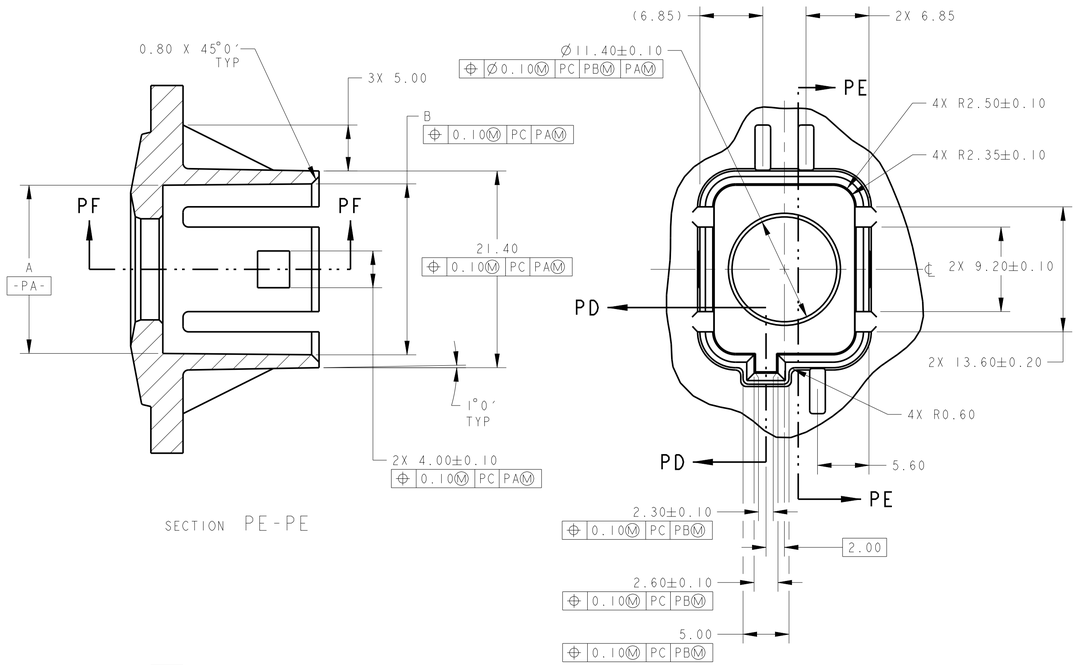

SECTION PE-PE

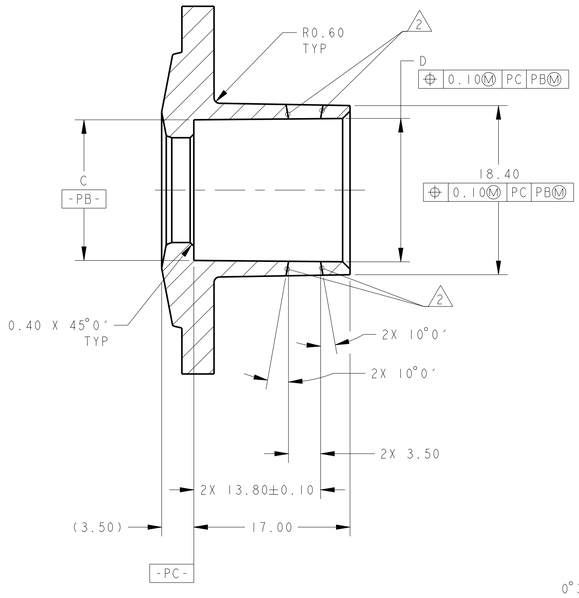

SECTION PF-PF

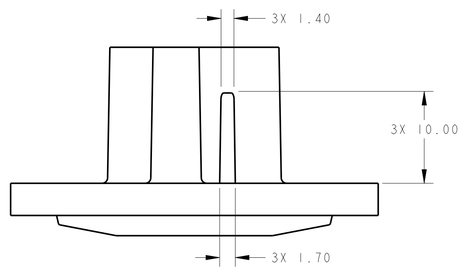

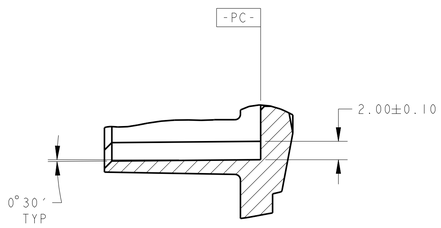

SECTION PD-PD

RECOMMENDED PANEL CUT-OUT
SCALE 3:1

PANEL CUT-OUT NOTES:

1. RECCOMENDED MATERIAL, PC / ABS.
2. SUFACE TO BE FLASH FREE.
3. ALL TOLERANCES ARE ±0.30 UNLESS OTHERWISE SPECIFIED.

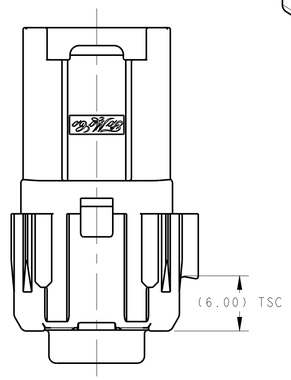

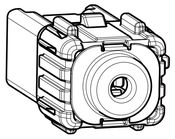

SCALE 2:1

SCALE 2:1

1. MATES WITH 4 POSITION GET CONNECTOR, TE P/N 5-1419169-2, (FORD P/N 1L2T-14489-GB).
2. MATES WITH Ø3.5mm PLUG PER JIS C 6560.
3. MATERIAL:
   HOUSING: PBT, GLASS FILLED, BLACK.
   COLLAR: CuZn.
   CONTACTS: CuSn.
4. FINISH:
   COLLAR: Ni PLATE.
   CONTACTS: SELECTIVE Sn AND Ni PLATE.
5. PIN TO SIGNAL DIAGRAM - SEE TABLE.
6. MATERIAL ID, DATE CODE (DDDYS), AND FORD PART NUMBER, ON THIS SURFACE.
7. BOTH ASSEMBLIES USE SAME COMPONENTS. LASER MARKING DIFFERENCE ONLY.

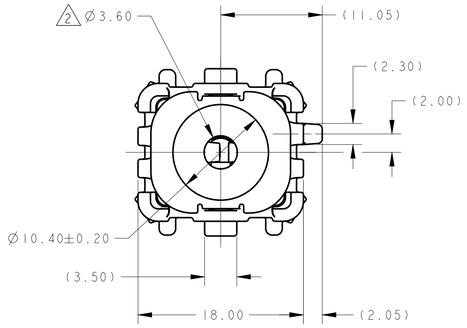

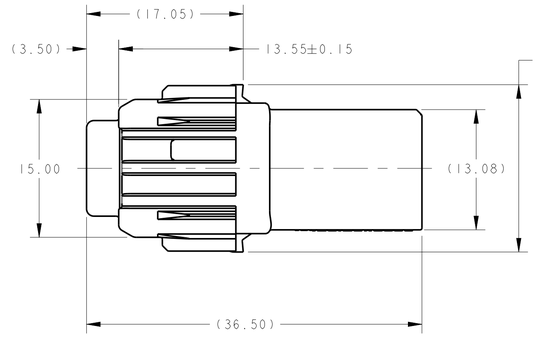

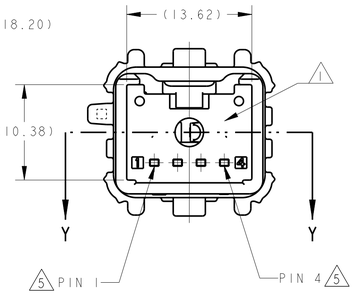

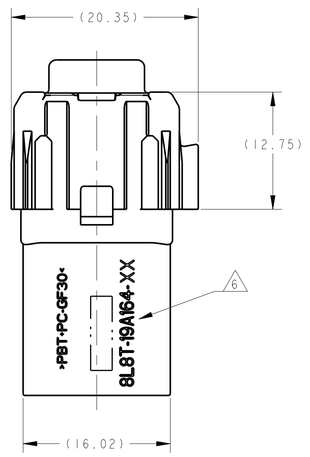

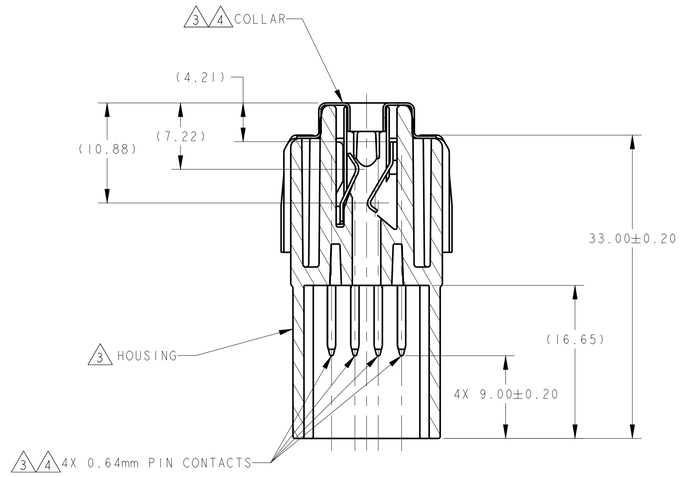

SECTION Y-Y

4	LEFT CHANNEL	AUDIO LINE
3	SIGNAL GROUND	GROUND
2	SIGNAL GROUND	GROUND
1	RIGHT CHANNEL	AUDIO LINE
PIN	SIGNAL NAME	DESCRIPTION

PIN TO SIGNAL DIAGRAM TABLE 5

8L8T-19A164-A1B	2272419-1
8L8T-19A164-AB	1326964-1
FORD PART NUMBER	PART NUMBER

THIS DRAWING IS A CONTROLLED DOCUMENT.

DIMENSIONS: mm

TOLERANCES UNLESS OTHERWISE SPECIFIED:
0 PLC ±-
1 PLC ±-
2 PLC ±0.10
3 PLC ±-
4 PLC ±-
ANGLES ±0°30′

MATERIAL - 3
FINISH - 4

DWN K.FOLTZ 16MAR2005
CHK G. MARTIN 17MAR2005
APVD G. MARTIN 17MAR2005
PRODUCT SPEC -
APPLICATION SPEC -
WEIGHT -

TE Connectivity

NAME ASSEMBLY, AUXILIARY INPUT JACK, MINI ADAPTER FOR 0.64mm, 4 POSITION GET

SIZE	CAGE CODE	DRAWING NO	RESTRICTED TO
A1	00779	C-1326964	-

CUSTOMER DRAWING | SCALE 3:1 | SHEET 1 OF 1 | REV B

4805 (3/13)

X-ON Electronics

Largest Supplier of Electrical and Electronic Components

Click to view similar products for Automotive Connectors ***category:***

Click to view products by TE Connectivity ***manufacturer:***

Other Similar products are found below :

003-018-000 60403001 60993906-B M902-2131 M902-2161 72.330.1035.1 73.353.4028.0 F119300-B F166900 F258300-B F358300-B F407400 F444110 F487000 F509500B-B 827153-1 8N1515-32-24P 9-1326729-8 925474-1 928905-1 964562-4 968782-1 GT17SA-8DS-HU 98891-1012 98947-1016 12004147 12004475-L 12010290 12010309-B 12015454 12020219-B 12020308 12041318-B 12052225-L 12052466 12059125 12064869 12004327-B 12010503-B 12015308 12015384 12015909 1-21030-1 12041254 12041318 12047946-B 12047957 12047957-L 12059473 12066261