NUMBER 353715

METRIC

三角法(3rd ANGLE PROJECTION)

単位：mm DIMENSIONS IN MM. DO NOT SCALE PRINT

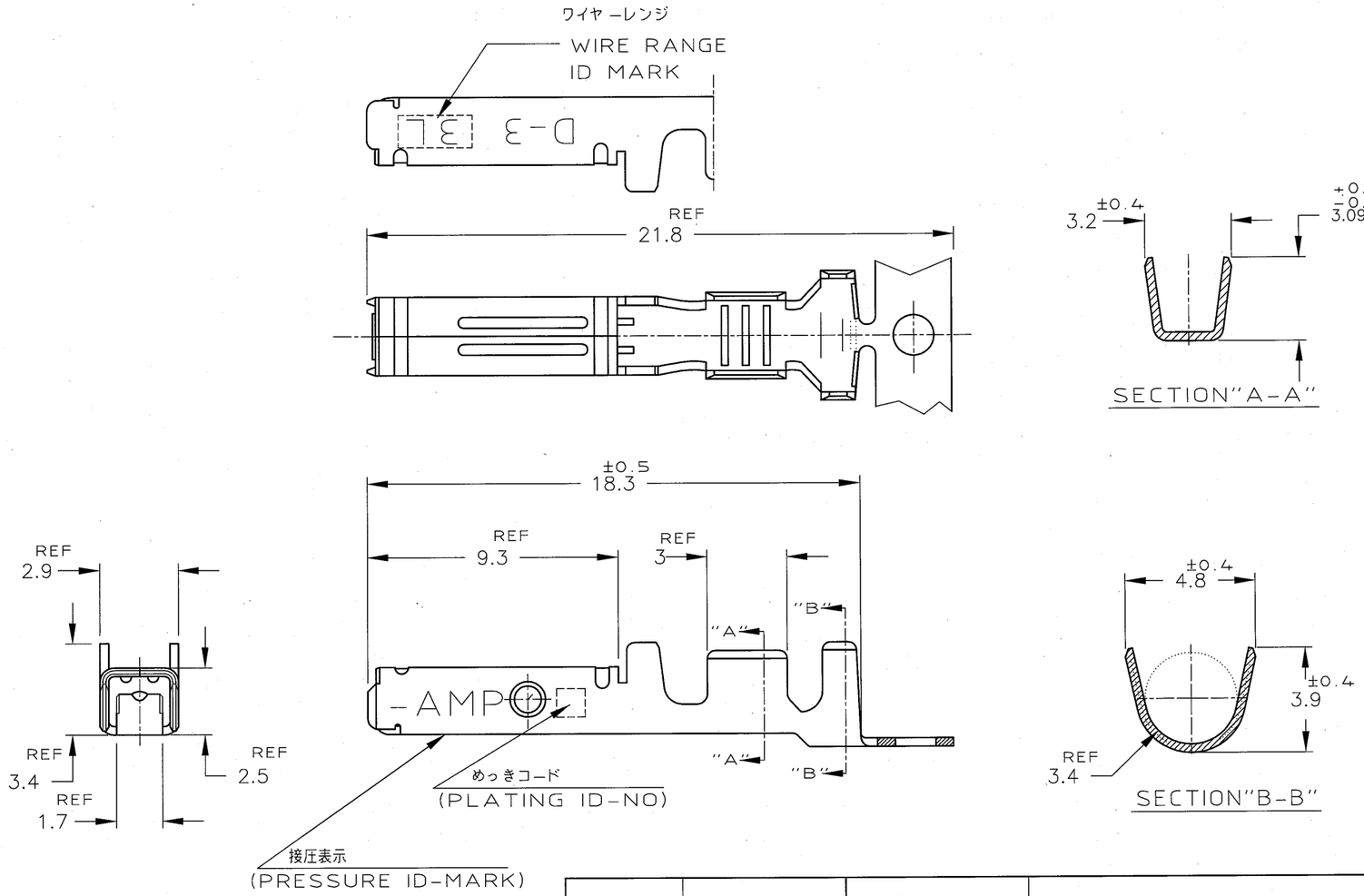

注記

△1 標準接圧型コンタクト：一般向け及び多極用
△2 高接圧型コンタクト　：　高電流用及び強振動用
△3 金めっきは接触部のみとする

NOTES

△1 CONTACT TYPE;LOW PRESSURE TYPE(FOR GENERAL)
△2 CONTACT TYPE;HIGH PRESSURE TYPE
(FOR HIGH CURRENT OR ANTI-VIBRATION)
△3 GOLD-PL. CONTACT AREA ONLY

備考(REMARK) 接点タイプ	接圧表示 (ID-MARK) (CONT. TYPE)	めっきコード (PL. ID NO)	仕上(FINISH)	△3 単体(L/P)		型番(P/N)	
△2	H	5	光沢錫めっき(BRIGHT TIN-PL.)	1-	-5	1-	-5
		3	0.76μm最小金めっき(0.76μmMIN.Au-PL.)	1-	-3	1-	-3
		2	0.38μm最小金めっき(0.38μmMIN.Au-PL.)	1-	-2	1-	-2
△1							
		3	0.76μm最小金めっき(0.76μmMIN.Au-PL.)		-3		-3
		2	0.38μm最小金めっき(0.38μmMIN.Au-PL.)	353717-2		353715-2	

LTR	変更 (REVISION RECORD)	DR	CHK	DATE
B	REVISED	Y.O	T.K	07OCT 2009
A	REVISED (FJ00-0690-97)	K.I	N.M	8/MAY '97
0	RELEASED(FJ00-5891-97)	K.I	Y.I	12/FEB '97

© COPYRIGHT - BY TYCO ELECTRONICS CORPORATION.
ALL RIGHTS RESERVED.

Tyco Electronics
Tyco Electronics Corporation
Kawasaki,Japan

抱合電線断面積(WIRE RANGE)	AWG 16-14
被覆外径(INSULATION DIA.)	3.1-3.4 mmφ
材料(MATERIAL) (COPPER ALLOY) 銅合金	
仕上(FINISH) (SEE TABLE) 表参照	
DR. 7/FEB/'97	K.IKEDA
DE. 7/FEB/'97	K.IKEDA
CHK. 12/FEB/'97	Y.ISHIKAWA
APP. 12/FEB/'97	Y.ISHIKAWA

名称(NAME) "3L" SIZE (DYNAMIC SERIES REC. CONTACT)
ダイナミックシリーズリセプタクルコンタクト

一般公差 (GENERAL TOLERANCE)
10以下 : ±0.2
10を超え 30以下 : ±0.25
30を超え100以下 : ±0.3
角度 : ±3°

SIZE	LOC	番号(No.)
A3	J	353715

尺度(SCALE)	REV.	SHEET
5-1	B	1 OF 1

PRINT DIST

AMP-J
REV.10/'83

(CUSTOMER DRAWING) 参考図面

X-ON Electronics

Largest Supplier of Electrical and Electronic Components

Click to view similar products for Headers & Wire Housings ***category:***

Click to view products by TE Connectivity ***manufacturer:***

Other Similar products are found below :

892-18-020-10-001101 58102-G61-06LF 582553-1 0009485154 009176003701906 0050291907 LY20-4P-DT1-P1E-BR 02.125.8002.8 609-3404 61062-3 61082-181009 622-3653LF 63453-116 636-1030 636-1427 636-3427 636-4007 641938-9 641991-4 644827-2 65817-010LF 65817-015LF 65863-015LF 66207-023LF 67095-007LF 67601157 68645-018 68648-049 70.362.1628.0 70-4210 70-4226B 70-4853B 707-5020 707-5028 71.350.2428.0 71918-208LF 71961-016LF 733-134 733-162 754199-000 760-3052 787-8014-00 79531-3000 FCN-360C032-B FCN-367T-T012/H FCN-723D010/2 80.063.4001.1 800-90-001-10-001000 800-90-010-10-002000 801-43-002-10-013000